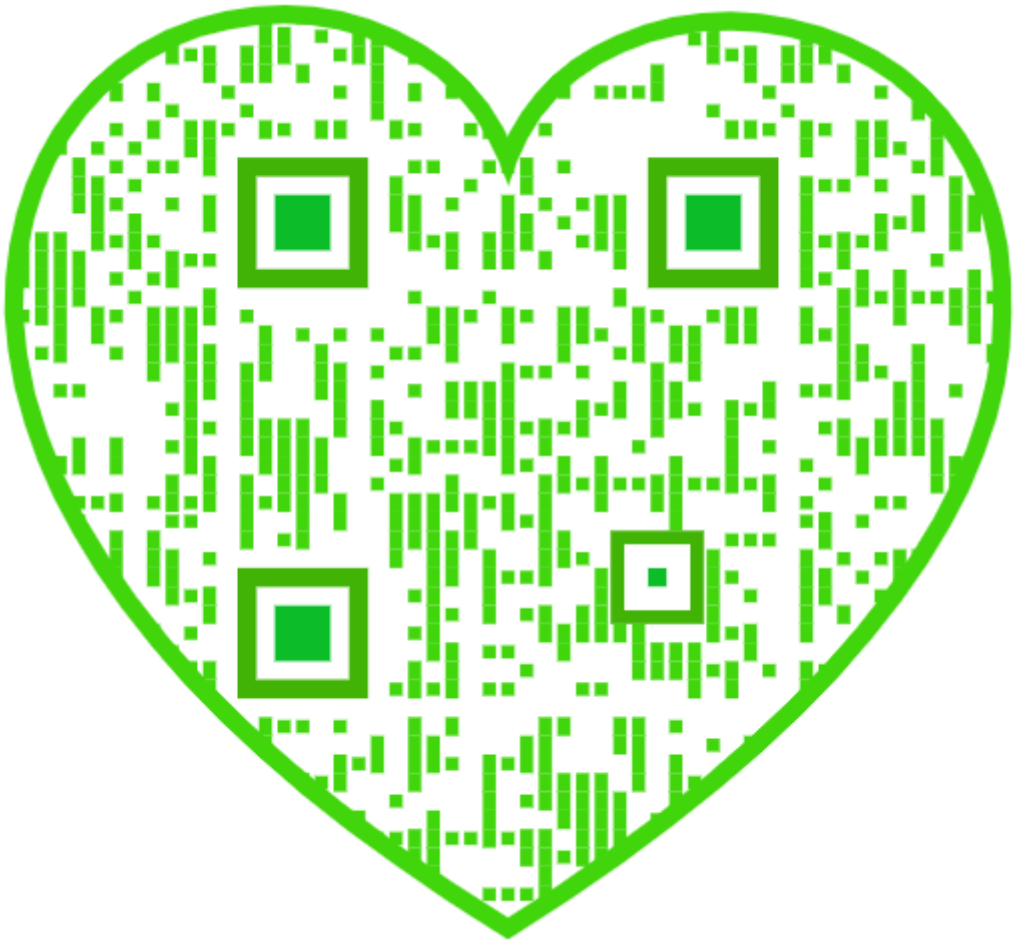

TN
802
.I6
Suppl

Raymond Davis Yorden.

A TREATISE

ON

COAL MINING

PREPARED FOR STUDENTS OF

THE INTERNATIONAL CORRESPONDENCE SCHOOLS

SCRANTON, PA.

Supplementary Volume

PERCUSSIVE AND ROTARY BORING
COMPRESSED-AIR COAL-CUTTING MACHINERY
DYNAMOS AND MOTORS
ELECTRIC HOISTING AND HAULAGE
ELECTRIC PUMPING, SIGNALING, AND LIGHTING
ELECTRIC COAL-CUTTING MACHINERY

WITH PRACTICAL QUESTIONS AND EXAMPLES
AND ANSWERS TO QUESTIONS

First Edition

SCRANTON
THE COLLIERY ENGINEER CO.
1900

956

Copyright, 1897, 1898, 1899, 1900,
by THE COLLIERY ENGINEER COMPANY.

Percussive and Rotary Boring: Copyright, 1899, by THE COLLIERY ENGINEER COMPANY.

Compressed-Air Coal-Cutting Machinery: Copyright, 1900, by THE COLLIERY ENGINEER COMPANY.

Dynamos and Motors: Copyright, 1894, 1895, 1897, by THE COLLIERY ENGINEER COMPANY.

BURR PRINTING HOUSE,
FRANKFORT AND JACOB STREETS,
NEW YORK.

General Office
Skinner
12-11-30

PREFACE.

In this supplementary volume are included the Instruction and Question Papers on Percussive and Rotary Boring; Compressed-Air Coal-Cutting Machinery; Dynamos and Motors; Electric Hoisting and Haulage; Electric Pumping, Signaling, and Lighting; and Electric Coal-Cutting Machinery; also the answers to the questions in the Question Papers. The first two of the above named Papers will hereafter be incorporated in Vol. III.; the remaining Papers will constitute Vol. IV.; and the answers to the questions will be included in Vol. VII.

The Papers entitled "Percussive and Rotary Boring" and "Compressed-Air Coal-Cutting Machinery" were formerly embraced under the title "Mining Machinery" in our Circulars of Information. The Papers entitled "Electric Hoisting and Haulage," "Electric Pumping, Signaling, and Lighting," and "Electric Coal-Cutting Machinery" were formerly embraced under the title "Electricity Applied in Mining Operations," and were included only in our Mine Mechanical and Full Mining Courses; they, together with the Papers on "Dynamos and Motors," were added to the Complete Coal Mining Course in January, 1899.

This volume is printed from the plates used in printing the Bound Volumes of the Full Mining Course. In these volumes the various papers and parts were made independent of each other in so far as the page numbers, figure numbers, article numbers, etc., were concerned, so as to allow any paper or part to be revised and brought up to date without disturbing any of the others. Hence, in each paper or part in this volume, all the page, figure, and article numbers, etc., begin with 1; and in order to make the index

intelligible, a number has been assigned to each paper and part. This number has been placed on the headline, opposite the page number; and to distinguish it from the page number, it has been preceded by the printer's section mark §. Consequently, a reference such as § 29, page 37, would be readily found by glancing at the inside of the headlines until § 29 is found, and then looking through § 29 until page 37 is found.

THE INTERNATIONAL CORRESPONDENCE SCHOOLS.

CONTENTS.

PERCUSSIVE AND ROTARY BORING.	*Section.*	*Page.*
Percussive Boring	26	2
Kinds of Bits	26	5
The Weights of Drills and Hammers	26	8
The Effect of Velocity and Weight in Boring	26	10
Classes and Use of Hammers	26	12
Tempering Drills	26	13
Power Percussive Drills	26	17
Methods and Appliances for Deep Boring	26	30
Portable Percussive-Boring Machines	26	42
Rotary Boring	26	45
Auger Hand-Drilling Machines	26	47
Auger Power Drills	26	52
The Ratchet	26	54
Appliances Used in Diamond Drilling	26	56
Machines Used in Diamond Drilling	26	66
The Value of the Record Furnished by the Diamond Drill	26	75
Practical Notes on Diamond Drilling	26	86
Special Methods and Devices for Diamond Drilling in Soft or Soluble Materials	26	106
Special Advantages Possessed by the Diamond Drill	26	109
The Davis Calyx Drill	26	110
COMPRESSED-AIR COAL-CUTTING MACHINERY.		
Compressed-Air Coal-Cutting Machines	27	1
Compressed-Air Power	27	2
Pick Machines	27	5

Compressed-Air Coal-Cutting Machinery —*Continued.*	*Section.*	*Page.*
Chain-Cutter Machines	27	19
Cutter-Bar Machines	27	27
The Longwall Mining Machine	27	28
The Auger Mining Machine	27	28
The Stanley Header	27	29
Dynamos and Motors.		
Introduction	28	1
Static Charges	28	3
Conductors and Non-Conductors	28	5
Electrodynamics	28	6
Circuits	28	12
Magnetism	28	13
Electromagnetism	28	18
Electrical Units	28	25
Applications of Ohm's Law	28	49
Electrical Quantity	28	59
Electrical Work	28	60
Electromagnetic Induction	29	1
Armature Reactions	29	34
Field Magnets	29	42
Types of Dynamos	29	53
Constant-Potential Dynamos and Generators	29	55
Efficiency of Constant-Potential Dynamos	29	68
Output of Constant-Potential Dynamos	29	80
Constant-Current Dynamos	30	1
Principal Closed-Coil Constant-Current Dynamos	30	4
Principal Open-Coil Constant-Current Dynamos	30	11
Output of Constant-Current Dynamos	30	25
Alternating-Current Dynamos	30	26
Multiphase Alternators	30	27
Transformers	30	47
Electric Motors	30	54

DYNAMOS AND MOTORS—*Continued.*	*Section.*	*Page.*
Output of Electric Motors	30	65
Alternating-Current Motors	30	72
Induction Motors	30	78
Installation and Care of Dynamo-Electric Machinery	30	91
Testing, Locating, and Remedying Faults	30	97
Care of Direct-Current Machinery	30	113
Repairs	30	116
Switchboards	30	122
Switchboards for Arc-Lighting Circuits	30	124
Switchboards for Incandescent-Lighting Circuits	30	130
Switchboards for Alternating-Current Circuits	30	141
Switchboards for Electric Railroads	30	142
ELECTRIC HOISTING AND HAULAGE.		
Power Transmission at Mines	31	1
Electrical Transmission	31	3
Electric Hoisting	31	16
Electric Haulage	31	25
ELECTRIC PUMPING, SIGNALING, AND LIGHTING.		
Pumping	32	1
Electric Signaling in Mines	32	18
Electric Lighting in Mines	32	39
Arc Lamps	32	41
Lighting Systems	32	43
Conductors	32	46
Protection Against Short Circuits	32	53
Switches	32	57
Series Arc-Light System	32	61
ELECTRIC COAL-CUTTING MACHINERY.		
Electric Coal-Cutting Machinery	33	1
The Transmission of Electric Energy to Mining Machines	33	2

ELECTRIC COAL-CUTTING MACHINERY — *Continued.*

	Section.	*Page.*
Chain Coal-Cutting Machines	33	5
Methods of Operating and Handling Chain Coal-Cutting Machines	33	11
Chain Shearing Machines	33	15
Cutter-Bar Machines	33	26
Pick Machines	33	27
General Remarks	33	33

QUESTIONS AND EXAMPLES.

	Section.
Percussive and Rotary Boring	26
Compressed-Air Coal-Cutting Machinery	27
Dynamos and Motors, Part 1	28
Dynamos and Motors, Part 2	29
Dynamos and Motors, Part 3	30
Electric Hoisting and Haulage	31
Electric Pumping, Signaling, and Lighting	32
Electric Coal-Cutting Machinery	33

PERCUSSIVE AND ROTARY BORING.

INTRODUCTION.

1. In prospecting for minerals and in mining operations, as well as in tapping the natural supplies of water, gas, and oil, some method of boring through the strata is necessary.

Bore holes of varying diameters and lengths, ranging from those of small diameters and short lengths for blasting purposes, to those of comparatively large diameters and great lengths for other purposes, play important parts in all mining operations. It is therefore important that the student should thoroughly understand the subject, so that he may know which method is best for any particular case.

2. The following are the principal uses of bore holes:

1. For finding the location of useful minerals, the thickness and nature of the deposits, and the inclination of the deposits.

2. For obtaining petroleum, natural gas, or salts in solution.

3. For sinking artesian wells, ropeways for underground haulage, passages for steam or water pipes, passageways for signal or electric-power wires, and for flooding mine fires. Bore holes have also been effectively used to drain old gobs of dangerous accumulations of gas.

4. For connecting live mine workings with adjacent old workings, which may be filled with accumulations of gas or water, and for draining off such accumulations in a safe manner.

5. For sinking shafts or slopes or driving tunnels through rock, and for removing overlying strata in stripping operations.

6. For driving entries, levels, headings, etc., in the vein, lode, or seam, and in enlarging such passageways by ripping down overlying or blowing up underlying strata.

7. For extracting the useful minerals in rooms, breasts, stopes, winzes, etc., or in open cuts or quarries.

3. There are two general methods of boring, viz., percussive and rotary boring. The former, being the simpler method, will be considered first.

PERCUSSIVE BORING.

4. Any form of boring by a succession of blows is called **percussive boring.** The kinds of drills used are: **hand drills,** which comprise ordinary bar drills operated by hand and hammer; **jumper** or **churn drills,** which are long and heavy bar drills operated entirely by hand; and **power drills,** which are operated by steam, air, or electricity. In many localities the small hand drills are also called "jumper" drills.

5. The cutting tools or bits used in percussive boring may be termed **intermittent cutters,** the characteristics of which are stated as follows:

1. They cut along lines parallel to the direction of the holes.

2. They cut out a chip at each stroke, whose horizontal section is a small sector of a circle; it therefore requires several strokes of the drill to advance the hole a distance equal to the depth of one chip.

3. The depth of the cut made by each successive stroke is proportional to the energy applied, and inversely proportional to the hardness of the rock.

6. In order to do effective work with a percussive drill, the cutting must be done in steps inversely proportional to the hardness of the rock. This is accomplished by turning

the drill through the proper angle at each stroke. In hand drilling the driller turns the drill with one hand and strikes with the other, or one man turns the drill while another strikes it. In machine drilling the turning is done automatically. In either case the angle through which the drill turns must be smaller in hard rock than it is in soft rock—the width of the chip, of course, varying with the angle.

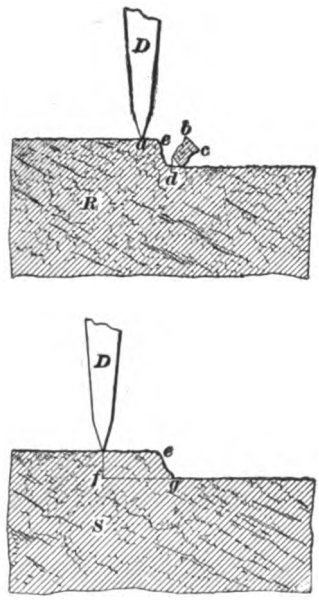

FIG. 1.

7. In turning a percussive drill, the greatest arc through which the outside edge of the drill is turned should not be greater than the depth of cut. Fig. 1 shows two pieces of rock *R* and *S*, each being acted upon by chisels in a manner somewhat similar to the action of a percussive drill in a bore hole. At *R* the chisel *D* cuts off a chip, the width *b c* or *a e* of which is less than the depth *b d*, while at *S* the chisel is so placed that the width of the proposed chip *f g* is greater than the depth *e g*, and its only action is to slightly powder the rock under its edge. This shows in a graphical manner that in the first case the resistance to chipping is overcome, while in the second case the resistance of the rock prevents chipping.

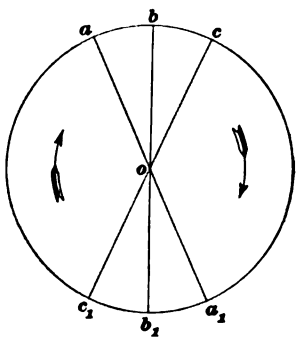

FIG. 2.

8. Fig. 2 shows some of the different positions of the cutting edge of a bit when drilling a hole and being turned as

indicated by the arrows. The relation of these positions may be stated as follows:

1. The cutting edge of the bit always coincides with the diameter of the hole. Thus, $a\,a_1$, $b\,b_1$, and $c\,c_1$ pass through o, the center of the hole.

2. When the bit cuts off perfect slices, they are, in plan, sectors of a circle.

3. The angle included between successive cuttings should be such that the maximum width of a slice will not be greater than the minimum depth of the cut.

9. Fig. 3 shows the bottom of a hole when the bit and all the debris have been removed. That portion of the face

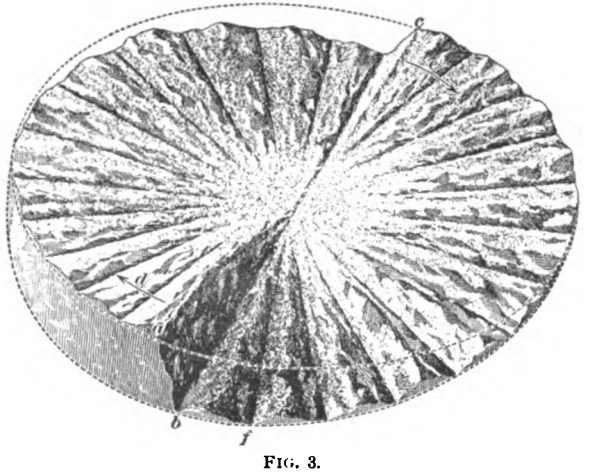

FIG. 3.

of the cut from the center to a is advancing in the opposite direction from that from the center to c, as shown by the arrows d, e. The depth $a\,b$ of the cut is greatest at the side of the hole, and becomes less towards the center, where it is very shallow. It is therefore evident that the center of the cutting edge of the bit does less work per blow than the extremities, and the work done by the cutting edge greatly increases from the center towards the ends. For this reason and the fact that the ends or corners of the cutting edge of a bit are the weak points, care should be taken in shaping and tempering.

10. In boring holes of different diameters in the same rock, the bit should be turned so that the outside arcs in all cases are equal. In other words, the greater the diameter of the hole the less the angle through which the bit is turned, providing the power applied remains constant. Suppose that it was found most effective to turn a bit through the angle *a o b*, Fig. 4, in a hole whose radius is *o a*; then in a hole whose radius is double *o a*, or *o c*, the bit should be turned through the angle *c o d*, making the arc *c d* equal to the arc *a b*. If, in drilling the large hole, the bit was turned through the angle *a o b*, or, which is the same thing, *c o c*, the rock would simply be crushed along the line *o c* instead of a slice being cut off, as would be the case if the drill was turned through the angle *c o d*.

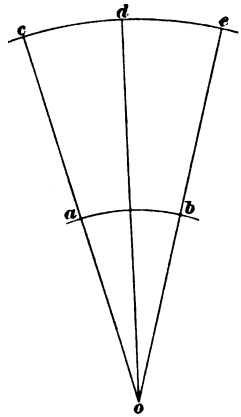

FIG. 4.

KINDS OF BITS.

11. The form of the cutting edge of a bit depends upon the nature of the rock, the size of the hole, and the power employed. For small holes, drilled by hand, in coal, the straight or concaved sharp-edged chisel is generally used. For drilling with machines or with hammers, these forms of bits are not suitable, as the energy supplied would act on them percussively with great force, and as a result the extremities of the edges would soon be blunted or broken off.

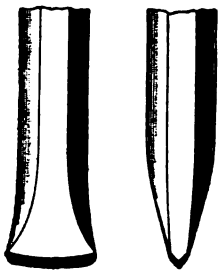
FIG. 5.

For rock-drills driven by hammer, and, under some conditions, for use with machines, the best form of edge is either the tapered bit or one with a convex edge, as shown in Fig. 5. These shapes protect the extremities of the cutting edge, where the greatest resistance is encountered.

12. In addition to the cutting edge being made of such form as to best withstand the extra work done at its extremities, it should be sharpened to suit the hardness of the rock to be bored. For instance, the cutting edge of the bit should be made so as to form in cross-section an acute angle for boring in coal or soft rock, and an obtuse angle for boring in hard rock. In any case the angle will depend upon the rock to be drilled. An obtusely sharpened edge would be as ineffective in soft rock as an acutely sharpened one in hard rock.

13. A soft sandstone, however, requires a blunter edge than a hard limestone, because it is made up of very hard grains of sand comparatively loosely cemented together, and more easily separated by pounding than by cutting. Fig. 6 shows a flat-edged bit frequently used for drilling in soft friable sandstone. As may be seen, the side *a b* and the end *c d* are both straight. It must not be supposed that a flat-edged bit is best in all cases to drill in sandstone. In arenaceous limestone, which is called sandstone, and calcareous sandstone a flat-edged bit would be very inefficient, or possibly useless. Experience and sound judgment together enable one to determine when it is most advantageous to use a flat-edged bit even in friable sandstone.

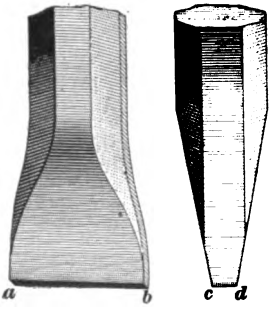

FIG. 6.

14. Fig. 7 shows an ordinary straight-edged bit in which the material is reduced at the middle of each side. This allows the debris to free itself readily at the center of the hole, where it would be pressed over and over again were this provision not made. This improvement is also advantageous in the flat-edged bits for drilling many sandstones or rock like the sandstones of Northeastern Ohio.

15. Fig. 8 shows a cross or + bit very commonly used in percussive power drilling. It is evident that the cutting edge of this bit is double that of the ordinary straight-edged bit, and that double the work can be done with it without detriment to its edges. Fig. 9 shows an **X** bit, which is also quite extensively used. It gives better results in many cases than the + bit, because the latter often rifles the hole, and thereby reduces the force of each blow. This, however, is not likely to occur when drilling in hard granitic rock, for the angle through which the bit is turned at each blow is small, and the surface of the hole is consequently made comparatively smooth and round. Fig. 10 shows a **Z** bit, which is an excellent form for equally distributing the work along the cutting

FIG. 7.

FIG. 8.

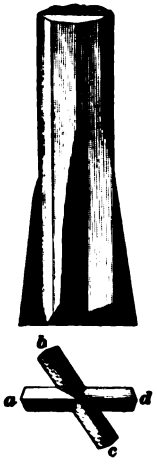

FIG. 9.

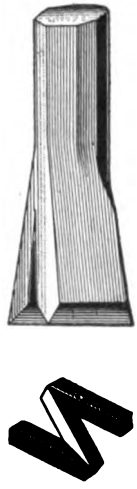

FIG. 10.

edge, and is especially efficient in soft rock; the only objection to it is the difficulty with which it is sharpened.

16. When drilling in hard rock, the straight-edged bit, Fig. 5, is liable to become wedged in a narrow crack, and

render the drilling difficult. To overcome this tendency, a bit with a curved edge, as shown in Fig. 11, is used. Such a form enables the bit to ride the narrow crack and prevents sticking in the hole. This bit is formed simply by the blacksmith bending the extremities of the finished straight-edged bit in opposite directions, care being taken not to bend them too far and thereby cause portions of the sides of the tapered parts to rub the side of the hole.

FIG. 11.

17. The ordinary straight-edged bit can be made or dressed up on an anvil with a hammer, but in order to shape and dress up the +, X, or Z shaped bits, special tools are required. Those used to make or dress up the + bits are shown in Fig. 12. The swage (*a*) is placed in the hardy-hole in the face of the anvil, and is used in connection with the spreader (*c*) to form the wings of the bit roughly, which are finally finished with the flatter (*d*) and the sow (*b*), which is

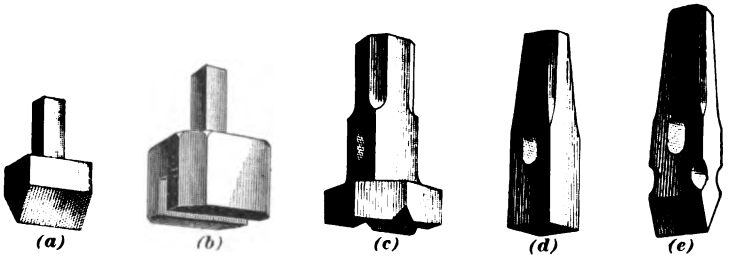

FIG. 12.

placed in the hardy-hole after the swage is removed. The dolly (*c*) is used to give the proper shape to the cutting edges of the bit. When X bits are sharpened, the grooves in the dolly must cross each other obliquely, or at such an angle as will suit the cutting edges of the bit.

THE WEIGHTS OF DRILLS AND HAMMERS.

18. It is important that the driller should know approximately the proper relative weights of hammer and drill, that he may obtain the best results. If a light hammer is

used to strike a relatively heavy drill, most of the energy will be dissipated in heat and vibration, and, of course, the longer the drill for the same weight the greater the loss.

19. The dissipation of energy that takes place when a hammer strikes a drill is proportional to the weight of the drill divided by the weight of the hammer. Thus, if a 3-pound hammer strikes successively a 9, 24, and 36 pound drill, the amounts of energy dissipated at the moment of impact will be proportional to $\frac{9}{3} = 3$, $\frac{24}{3} = 8$, and $\frac{36}{3} = 12$, respectively. Therefore, it is evident that the lighter the drill, within certain limits, the less the loss of energy through heat and vibration. It is not necessary to be able to determine the exact efficiency of a hammer and drill, but by observing the above statement in relation to the dissipation of energy, a driller can, after a little experience, easily decide upon the best combination of hammer and drill for any particular work. In order that the student may fully understand the consequence of using an inefficient combination of hammer and drill, a few illustrations of the way in which energy may be dissipated through heat and vibration will be given.

20. If the head of a large pile be struck with a small hand-hammer, the whole of the energy stored up in the hammer will be converted into heat and vibration; for, on striking the head of the pile in rapid succession, the point of impact will become hot, and each blow will make a noise that is produced by the vibration of the pile, which is not advanced the least amount, and therefore no useful work has been done upon it. The effect of a clapper of a bell furnishes an excellent illustration of how energy is converted into vibration or sound.

If a blacksmith pounds a small piece of iron upon the anvil with blows of considerable force and rapidity, the iron will become visibly red, showing that, notwithstanding the iron is flattened out, most of the energy given up by the hammer is converted into heat. The fact that a man receives no injury when he places a large stone upon his

breast and allows another man to strike and break it, as is frequently done by acrobats, shows that the energy of the hammer is almost entirely spent in heat and vibration. These illustrations clearly show the folly of using a small hammer and a large drill to bore a hole in rock.

21. In drilling, the hardness and tenacity of the rock determine largely the weight of drill to use. If too light a drill is being used in a hard rock, it will rebound and a ring will be produced at every blow similar to that produced by striking the face of an anvil with a hammer, showing that more or less energy is being wasted in vibration. An experienced driller soon determines by the sound and feel of the drill whether or not it is suited for the work, and naturally complies with the law that the weight of the drill should be proportional to the hardness of the rock.

THE EFFECT OF VELOCITY AND WEIGHT IN BORING.

22. The amount of work which a drill is capable of doing at the moment of impact depends upon the amount of energy it has stored up at that instant, and this in turn depends upon the velocity, for the energy varies as the square of the velocity. It is therefore immaterial how far the drill moves so long as it acquires the desired velocity, but the less the distance through which the drill moves in order to have a certain velocity, the greater the force must be. Hence, with an available constant force the only way to obtain an increase of kinetic energy in the drill is to increase the length of stroke, which enables the constant force to give the drill increased velocity before impact. The energy also varies as the length of the stroke when the drill is actuated by the same or a constant force, and as the weight when the velocity is constant at the moment of impact. To illustrate, a drill having a velocity of 20 feet per second at impact has four times the energy it has when its velocity is but 10 feet per second at impact; or a drill

having a 12-inch stroke has twice the energy at impact that it would have if it had but a 6-inch stroke; or a drill weighing 20 pounds has twice the energy at impact that it would have if it weighed but 10 pounds, other things being the same.

FIG. 13.

23. In drilling a hole with a long or heavy jumper, two men can do about four times as much effective work as one man using the same drill. This is due to the fact that one man expends a great deal of his energy lifting the drill, and therefore can not exert much force to the drill on its downward stroke. On the other hand, two men lose less energy between them in lifting the drill, and consequently can exert more than double the force on the downward stroke. Further, two men can lift the drill higher in boring downward holes, and therefore have a longer distance through which to accelerate it. This increases the energy at impact proportionally to the increase of length of stroke, as previously stated.

24. The weight of the drill should be such that the drill will not rebound on account of the elasticity of the rock, or have its cutting force materially affected by the debris at the bottom of the hole. Where the hole reaches such a depth that the drill is as heavy as it is possible to advantageously use it, the shank may be made lighter. The jumper is sometimes enlarged near the middle and provided with a bit on each end, as shown in Fig. 13. This arrangement gives weight where the size and depth of the hole would not permit as much weight in the drills as could otherwise be effectively used. The shorter portion *a b* is used first, and when the hole reaches such a depth that the bulb prevents drilling farther, the drill is reversed and the portion *c d* used to finish the hole. In drilling a hole in rock, the cutting edge

of the bit becomes blunt and somewhat shorter, thereby forming a slightly tapered hole, and necessitating that the succeeding bit have a cutting edge from $\frac{1}{16}$ to $\frac{1}{8}$ of an inch shorter than the preceding one.

25. Where the rock is not too hard, jumper drills are often preferred for drilling downward holes; but they are ineffective in drilling vertically upwards, for their weights act against rather than with the force exerted by the driller in delivering the blow. For drilling in hard rock and vertically upwards, the drill and hammer is more efficient than the jumper or churn drill. Percussive drills worked with steam or compressed air are really jumper drills; they do not depend so much upon the weight of the drill for their cutting effect as the hand drill, but rather upon the force which actuates the drill. This force is varied to suit the hardness of the rock in which the hole is being bored.

CLASSES AND USE OF HAMMERS.

26. The two classes of hammers used for drilling are single-hand hammers and sledges. The former are used when drilling a short small hole, in which the driller turns the drill with one hand and strikes with the hand-hammer held in the other, and the latter are used for drilling comparatively large and deep holes, in which the driller turns the drill with both hands while a helper strikes it with a sledge weighing from 5 to 12 pounds and having a handle from 22 to 36 inches long. By the use of the sledge more energy can be imparted to the drill than can be given to it by lifting and dropping it, as in the case of the jumper drill, no matter how heavy the jumper may be.

27. In drilling holes for blasting purposes, a **scraper** is indispensable; it is a slender rod of iron with a flat scoop on one or both ends, which is turned at right angles to the rod.

TEMPERING DRILLS.

28. Tempering a drill is the process of giving it a certain degree of hardness and toughness by first heating it and then cooling it in water or other suitable liquid. In order to get the proper or desired temper in a drill, it is necessary to cool it off when it has a certain temperature, which is very accurately known by the color peculiar to that degree of heat and the grade of steel in the drill. It is therefore essential that the succession of colors produced in steel while changing its temperature be known, as well as the characteristics of the steel.

Annealing is the process of softening iron or steel by means of slowly cooling it after it has been heated. If a piece of steel is heated to redness and covered with dry ashes so as to prevent the rapid radiation of heat, it will be quite soft when cool, while if it is plunged into water it will be hard and brittle.

Not only is it important that any one who tempers drills should know the temperatures indicated by the different colors, but he also should bear in mind that the same color in drills made of different qualities of steel indicates different temperatures. For example, with a fine quality of cast steel a temperature of 490° F., corresponding to a brown-yellow color, would give a bit when cooled off at that temperature a cutting edge suitable for drilling in rock of average hardness, but with a comparatively mild steel, having .5 or .6 per cent. of carbon, a temperature of 520° F., which corresponds to a purple color, would be required to obtain the same hardness and tenacity.

29. The following experiment will enable the student to learn and familiarize himself with the succession of colors: Take an old table-knife and lay it on a very hot lid of a stove or other hot iron. Presently the blade will show a straw color, which will run to the handle. The straw color will be succeeded by yellow, brown-yellow, brown-purple, purple, and blue. These colors follow each other so quickly that close attention must be paid to observe the transition.

When this has been done, the student should learn the degree of hardness that corresponds to the different colors.

To do this, place the blade flat upon the hot lid or other piece of hot iron so that the whole of it will be of the same temperature and color at the same instant; provide a vessel of water, and when the blade becomes straw color quickly plunge it into the water, and finally test its hardness with a file or good pocket-knife. When soft the file easily takes hold, and with the pocket-knife a small shaving can be cut from an edge. Repeat the operation for the different colors, and when the work is completed the student will have a good knowledge of the degree of hardness that corresponds to the different colors of the particular quality of steel in the blade. In the same way a blacksmith or tool dresser should learn the degree of hardness that corresponds to the various colors of each grade of steel which he has to work.

30. In tempering a drill, the following points should be observed:

1. When the bit is dipped in water, it should be moved up and down, or the molecular tension above and below the water-line will be so different that the bit will be liable to break in the same way as the bottom of a glass vessel is cracked by pouring hot water into the vessel.

2. The bit of a drill should not be placed in the incandescent cinders of a fire to be heated, for the cutting edge will be decarbonized and rendered worthless.

3. The bit should be heated a few inches from the cutting edge to prevent decarbonization, and it should not be kept in the fire longer than necessary to heat it to a cherry-red heat.

4. Immediately after removing the bit from the fire, it should be dipped in water for a moment to partially cool it and then rubbed on a stone to remove the outside scale, in order that the colors can be easily distinguished.

5. The colors should advance parallel to the cutting edge, and if in any case they are observed to do otherwise,

that portion of the bit to which they are advancing most rapidly should be dipped in water. Frequently it is necessary to dip the bit in water several times to obtain the proper parallelism before the final cooling. If the bit were cooled when the colors were not parallel to its cutting edge but crossed it, the cutting edge would likely be too soft in one place and too brittle in another.

6. The tool dresser should thoroughly understand how iron can be converted into steel by carbonization and steel into iron by the oxidation of a portion of its carbon. For example, if a piece of white-hot iron is buried in powdered charcoal and the air kept away from it, the skin of the iron becomes carbonized and converted into steel, and if, on the other hand, a bar of red-hot steel is buried in oxide of iron, the skin of the steel becomes decarbonized or converted into malleable iron. In the same way, if the cutting edge of a bit is made red hot in a forge fire and kept at that heat for some time, it will be decarbonized or converted into malleable iron. This is why care should be exercised in heating the drill.

7. The bits of drills give better results when tempered in thick oil or coal-tar than when tempered in water, the reason being that the water rapidly chills the thin parts and the skin of the thick parts, which produces uneven hardness in the bit, while the oil or tar cools the bit more gradually and evenly and renders it more tough. If it is found that a certain bit should be dipped in water when it has a blue color, it should be dipped in oil when it has a purple color. In other words, in order to produce the same degree of hardness while tempering with oil that has been obtained by tempering with water, the bit should be dipped in the oil when it has the color which precedes the one which it has when dipped in water to obtain the best temper. This is due to the fact that the oil cools the bit more slowly. In all cases the oil makes the bit tougher and more reliable than it can be made by the use of water.

8. The best temper for bits made of good steel is

produced by dipping the bit in water when it is blue, or in oil when it is a very light blue.

9. The colors are deep and distinct for good steel and scarcely perceptible for poor steel, consequently a practised eye can determine very accurately the quality of the steel by the depth of the running colors.

31. Fig. 14 shows the order of the colors when the bit is heated to a dull redness at *H*. The arrows indicate the direction in which the colors flow. If a drill is sufficiently hard when tempered at a purple color in water, but lacks in toughness, it can be tempered in oil and given the same

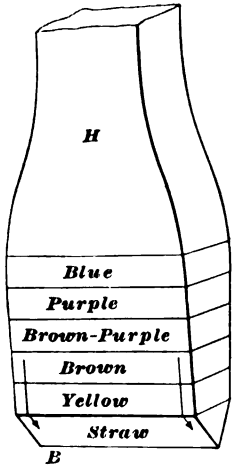

FIG. 14.

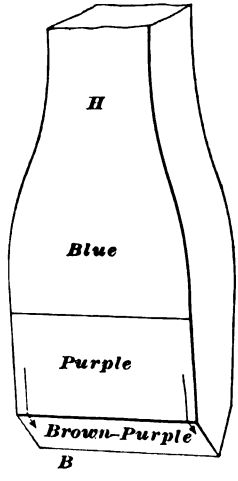

FIG. 15.

degree of hardness and increased toughness by dipping it in the oil while the brown-purple is in the cutting edge, as shown in Fig. 15. The reason it should be dipped in the oil before the purple color arrives at the cutting edge is because the oil takes more time to cool it than is required by water, and therefore by the time it is cooled the purple color will have reached the cutting edge.

POWER PERCUSSIVE DRILLS.

32. Compressed-air and steam drills have made it possible to work with profit many mineral lodes and veins and coal seams which would be unprofitable were they developed by means of hand drilling. They have also made it possible to accomplish great engineering projects, as the driving of large and long tunnels, the sinking of deep shafts, and the building of comparatively straight railroads in mountainous regions where deep rock cuts are required.

33. Fig. 16 shows the general construction of a steam or compressed-air rock-drill. The machine is supported on a tripod, the legs of which are weighted by the heavy castings *W*, *W*, and attached to the body of the machine with universal joints, as shown at *S*, *S*. The steam or air cylinder *C* is raised or lowered on the slides *G*, *G* by the screw *P*, which is turned by the hand-crank *A*. The drill is attached directly to the chuck on the end of the piston, which has a stroke of from 4½ to 8 inches. The steam or air is conducted to the cylinder through a rubber tube, and exhausts through the curved pipe. It is turned off or on by a valve, and when turned off any steam or air that may be confined in the cylinder can be freed by another valve attached to the same **T**, but above the connection with the cylinder.

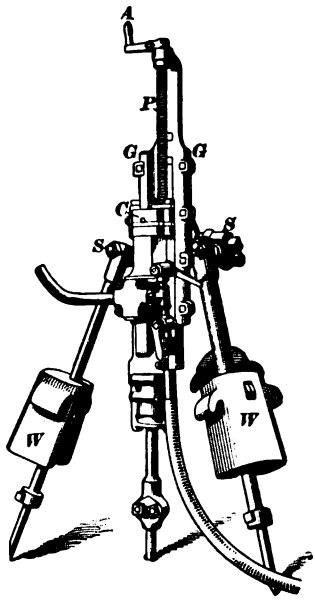

FIG. 16.

34. The detail mechanism is shown in Fig. 17, which is a longitudinal section of a compressed-air or steam rock-drill. The piston-head is over one-half the length of the inside of the cylinder *A*. Each end is provided with a steel

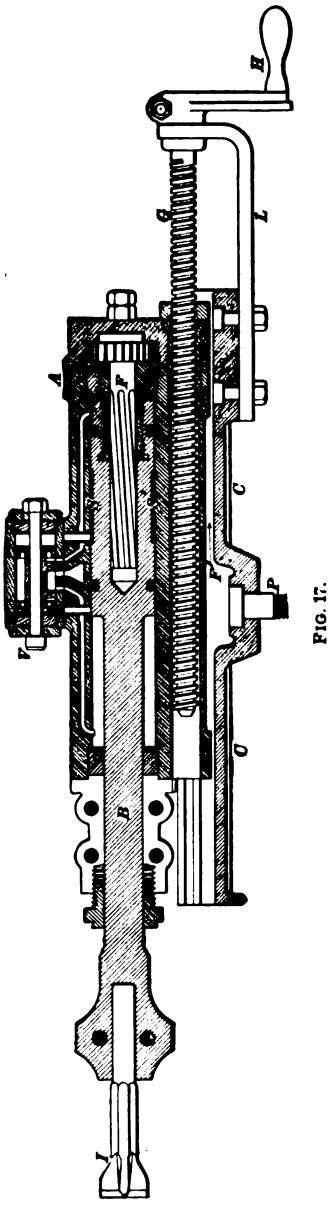

FIG. 17.

ring, which makes it steam or air tight, and in the middle there is a reduction, leaving the annular space $S\,S'$. The piston B is automatically turned during the upward stroke by the rifle F, which is prevented from turning the opposite way by a pawl and ratchet-wheel at the top of the rifle F. Thus, during the downward stroke of the piston B, the rifle is turned, but during its upward stroke the rifle is prevented from turning by the ratchet-wheel and pawl, and consequently the piston and drill must turn. In this way, the bit is automatically turned for each blow.

35. There are several excellent power percussive drills on the market, which are designed on the same general principles, the most essential difference being in the construction of the steam or air valves.

36. The number of strokes made per minute by percussive drills depends on the power applied and the size of the drills. The smaller drills make more strokes per minute but strike lighter blows than the larger ones. With a pressure of 60 pounds per square inch, percussive drills range in speed

from about 500 strokes per minute for small machines to 250 strokes per minute for large ones.

This difference in the speed of the machines is due to the fact that in the small machines a bit will stand a larger number of blows per minute, because the weight of the blow is less than in the large machines. In a small machine, using a comparatively small drill, a velocity of 500 strokes per minute will not injure a bit any more than a much less velocity in a larger machine. For this reason the manufacturers of power percussive drills have adjusted the speeds of the various sizes, so that each will have a speed which will do most effective work. These speeds have been adopted in accordance with the general principle that for a given amount of energy a power drill can cut more hard rock, with less damage to the bit, when it strikes a moderately hard blow at frequent intervals than when it strikes a very hard blow at less frequent intervals.

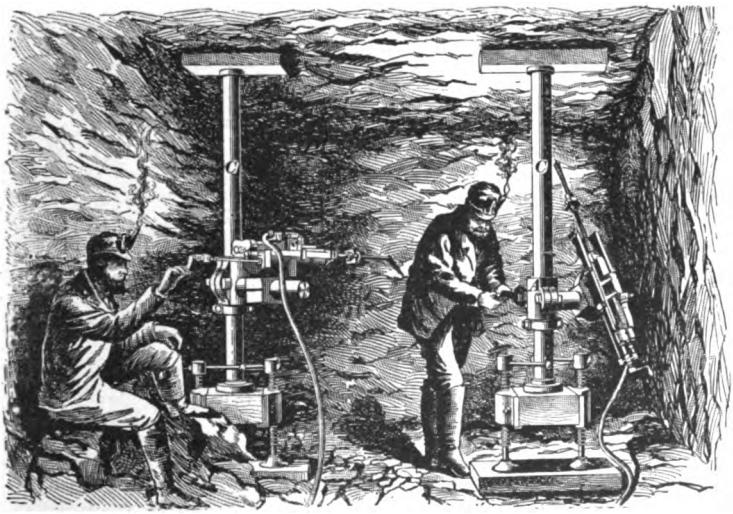

FIG. 18.

37. Fig. 18 shows two drills mounted on double-screw drilling columns *C*, *C*. The man on the left has his drill in

position for drilling a horizontal hole in the rock, and the man on the right is tightening up the socket *A* on the column at a position sufficiently low to drill a hole near the top of the tunnel and pitching upwards. Each of these columns is fastened from the bottom, as the tunnel is too

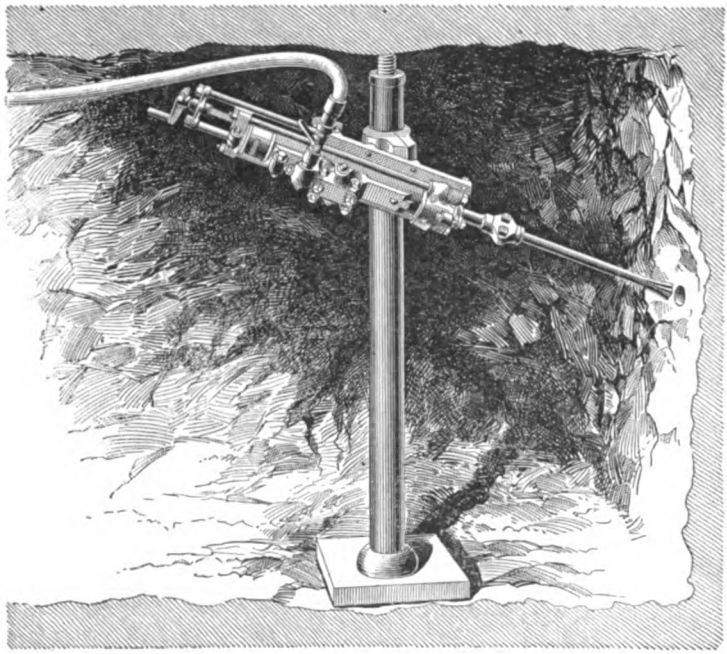

FIG. 19.

high to operate the screw conveniently from the top. Fig. 19 shows a single-screw drilling column fastened or tightened from the top, and a drill fastened to it in position to drill a hole in the face inclining downwards, and Fig. 20 shows a drilling column in a horizontal position and two in vertical positions. It also shows how percussive-power drills are set up and connected to the main steam or air pipe for doing work under different conditions.

38. It is possible to operate a percussive-power drill in almost any position, and, in addition to this advantage, the

amount of work they can do is many times greater per day than that which can be done by hand drilling, provided there is sufficient space to operate the machines.

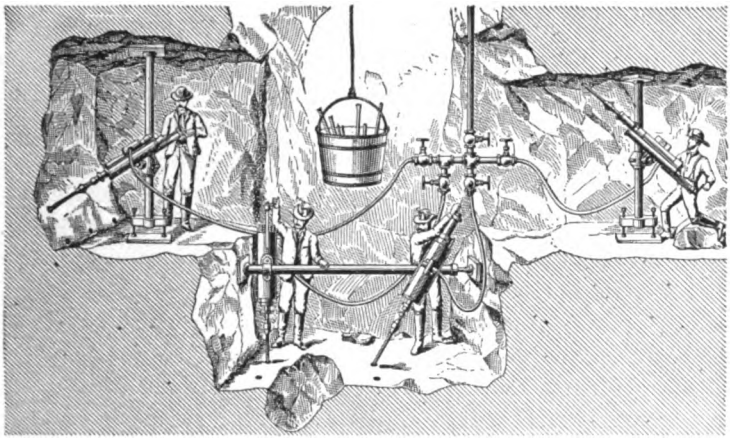

FIG. 20.

39. André sums up the requirements of a good percussive machine rock-drill as follows:

1. It should be simple in construction and strong in every part.

2. It should consist of few parts, and especially of few moving parts.

3. It should be as light as possible, consistent with strength.

4. It should occupy as little space as possible.

5. The striking part should be of relatively great weight, and should strike the rock directly.

6. No parts except the piston and bit should be subject to violent shocks.

7. The piston should have a variable stroke.

8. The sudden removal of the resistance should not cause any injury to any part.

9. The drill should be rotated automatically.

10. The feed, if automatic, should be regulated by the advance of the piston as the cutting advances.

40. The weight of a steam or compressed-air percussive rock-drill, less the weight of the piston and drill, should be greater than the total steam or air pressure upon the piston-head, for it is this pressure that reacts upon the machine and tends to lift it when the piston is being forced downwards. It is to overcome this reactionary force that the dead weights are placed upon the legs of the tripod; when the machine is attached to a drilling column, dead weights, of course, are not required.

If the size of the piston-head of a machine rock-drill is 3 inches in diameter, and the steam or air pressure be taken at 70 pounds per square inch, the constant force which accelerates the piston and bit will equal $3^2 \times .7854 \times 70 = 494.8$ pounds. Hence, the weight which tends to keep the machine in place while the piston is being forced out should be at least 500 pounds, otherwise the reactionary force would remove the machine in the same way that a cannon recoils when a large ball is shot from it.

41. The following are the dimensions and features of power percussive rock-drills of the standard type:

1. The diameter of the piston varies from 2 to 5 inches.

2. The length of stroke varies from $4\frac{1}{2}$ to 8 inches.

3. The extreme length of the drill from the end of the crank to the end of the piston varies from 36 to 60 inches.

4. The length of the feed or the distance the piston and cylinder can be moved to follow up the advance of the hole varies from 12 to 30 inches.

5. The weight of the machine without the tripod varies from about 100 to 700 pounds. The weight of the tripod without the dead weights varies from 40 to 270 pounds. The total weight of the machine varies from 250 to 1,600 pounds.

6. The force of the blow varies from 250 to 1,500 pounds.

7. The mean steam or air pressure used is 60 pounds per square inch.

8. The average number of strokes per minute is 500 for the small drills and 300 for the large ones.

9. The large machines drill to a depth of approximately 30 inches, and the small ones to a depth of approximately 12 inches without changing bits.

10. The average work done in drilling downward holes in granite is about 7 feet per hour.

11. The depths to which the small and large machines drill holes are about 4 and 30 feet, respectively.

12. The diameters of the holes drilled by small and large machines are from $\frac{5}{8}$ inch to $1\frac{1}{4}$ inches and from 3 to 6 inches, respectively.

13. The diameter of the steel bars used for making drills for small machines varies from $\frac{3}{4}$ to $\frac{7}{8}$ inch, and for large ones it varies from $1\frac{5}{8}$ to $2\frac{1}{2}$ inches.

14. Four drills make a set for shallow holes and ten drills for long ones.

15. It requires about 5 horsepower to work the small drills and about 15 horsepower to work the large ones.

16. Steam is usually the most economical for drilling in outside work, but for tunneling and sinking shafts, or mining work in general, compressed air is the best, for it helps to ventilate and makes the surrounding atmosphere more comfortable for the workmen. Further, it is more economical to transmit energy considerable distances through air than through steam.

42. The electric percussive drill resembles in its general appearance the steam or compressed-air drill, and it can be mounted on a tripod, column, or quarry bar, and can be used in any place not generating explosive gases in dangerous quantities. The operation of electric percussive drills depends upon the principle that if an electric current be passed through a coil of wire in the form of a helix, such forces will be set up that if a soft iron core be placed within

the helix it will be drawn to a central position if free to move. Therefore, it is clear that if an iron core be passed through two adjacent coils and the current run through one of them, the core will be drawn in one direction, and if run through the other the core will be drawn in the opposite direction.

43. A longitudinal section of one of these drills is shown in Fig. 21. The reciprocating motion is given to the plunger *a* by alternate magnetic forces produced by an electric current passing through the coils *b* and *c* alternately. The change of current from one coil to the other is effected at the dynamo or generator, and consequently nothing but common connections are needed on the drill. The flexible cable which conveys the current to the drill consists of three wires, one of which is common to the return portion of each of the two circuits leading from the coils. The connections between the wires of the cable and the coils are made by means of the brass plugs *d*.

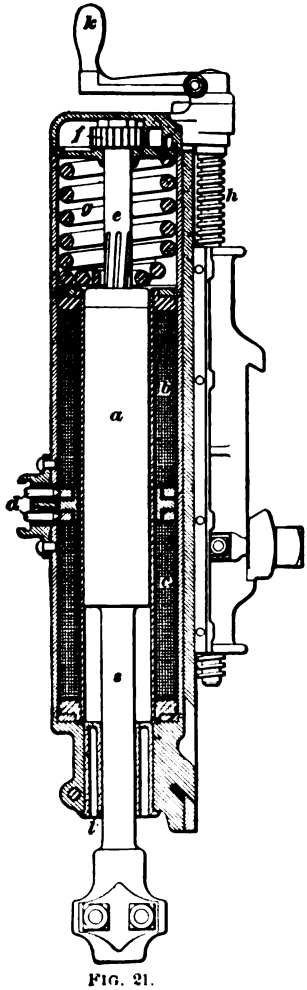

FIG. 21.

The plunger is rotated by the rifle rod *e*, which enters a rifled nut at the end of the plunger, and which is prevented from turning during the backward stroke by the ratchet-wheel *f*.

The large spring *g* not only absorbs the energy of the plunger during the backward stroke, but it imparts the energy thus absorbed to the plunger during its forward stroke, thus enabling the drill to

strike a heavy blow. The feed-screw *h* is turned by the crank *k*, but when desired these drills are provided with automatic feeds similar to those used on other drills.

In case the bit meets with no resistance and the stroke becomes excessively long, the plunger is prevented from striking the brass bushing *l* by a magnetic force set up in the rear coil. The plunger runs quite freely, having a bearing at one end within the coils and another in the front head of the drill. It is not necessary that the brass bushing fit the shank *s* neatly, as an air or a steam tight joint is not required.

The principal use of the bushing is to prevent the drill from wabbling when starting a hole, and when it fails to do this, new bushing is readily put in.

The coils are made of bare copper wire of square section wound upon a steel tube provided with steel heads. The wire is insulated with pure mica, and from its square shape forms a solid cylinder, which is not affected by the jars and shocks to which the machine is subject while working. The coils are encased in iron jackets, which make them impervious to dirt or moisture.

THE HAND-POWER ROCK-DRILL.

44. Hand-power rock-drills resemble somewhat, in their construction, and very much in their mode of action, the steam and compressed-air percussive rock-drills. They are used principally in places where steam or air is not available, as in many mines and tunnels, and are more economical than churn-drills or hammers and jumpers, because the energy which operates the drill is economically stored, and very little of it is lost in vibration.

45. Fig. 22 shows the Jackson hand-power percussive drill, in which *S* is the chuck on the end of the piston and in which the bit is placed and rigidly fastened. *C* is the hand-crank by which the gear-wheel *G* is directly turned. This wheel gears with a pinion on the axle of the

fly-wheels *F*, *F*. The feed is automatic or regulated by the crank *H*.

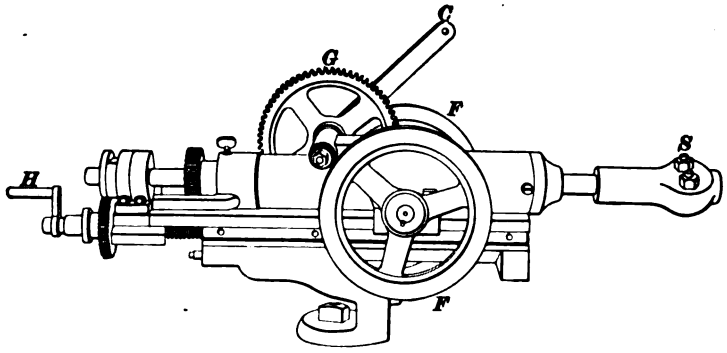

FIG. 22.

46. Fig. 23 shows a longitudinal section of a hand-power drill. The large and small gear-wheels are shown in dotted lines at *m* and *n*, respectively, and the fly-wheels in a full line at *o*. It will be seen that the cams *f* are placed upon the same shaft as the fly-wheels and the small gear-wheel *n*, and that they are turned very rapidly when the crank *l* is turned by the operator, the ratio being 3¼ to 1. The cams are so shaped that they press against the shoulder *k* so as to compress the spring a little and store up energy in the fly-wheels during a considerable portion of their revolution. During the remainder of their revolution they rapidly compress the spring to its limit by utilizing the stored energy in the fly-wheels, and suddenly release the shoulder *k* and allow the spring *g* to shove the piston *a* forwards with great force. In this way the drill, which is fastened in the chuck *b*, is made to strike the rock with hard and frequent blows. The drill is turned automatically by the rifle *h*, as in steam or compressed-air percussive drills, and in case all resistance is moved away from it, the shoulder *e* acts against the spring *c*, which gradually absorbs the energy of the piston and prevents any serious shocks to the machine.

The stroke is variable, which is necessary to prevent fitchering while starting a hole or boring through the parting of

two seams, and the operating mechanism is advanced as the hole increases in depth by means of the feed-screw *d*, which is turned by the hand-crank handle *t*. The feed is also automatic; the small gear-wheel near the top of the rifle *h* turns the gear-wheel below the handle *t*, which in turn rotates the feed-screw *d*. The rotating and check wheels are placed immediately below the small gear-wheel at the top of the rifle *h*, and the drill is forced to turn one way, as in steam or compressed-air drills. The support or center-clamp stem is bolted to the frame or tripod that is used to hold the machine in place. These drills are very efficient, and strike a blow varying from 50 to 500 pounds, depending upon the position of the tension screw, which is held in place at the top of the spring *g* by a small set-screw.

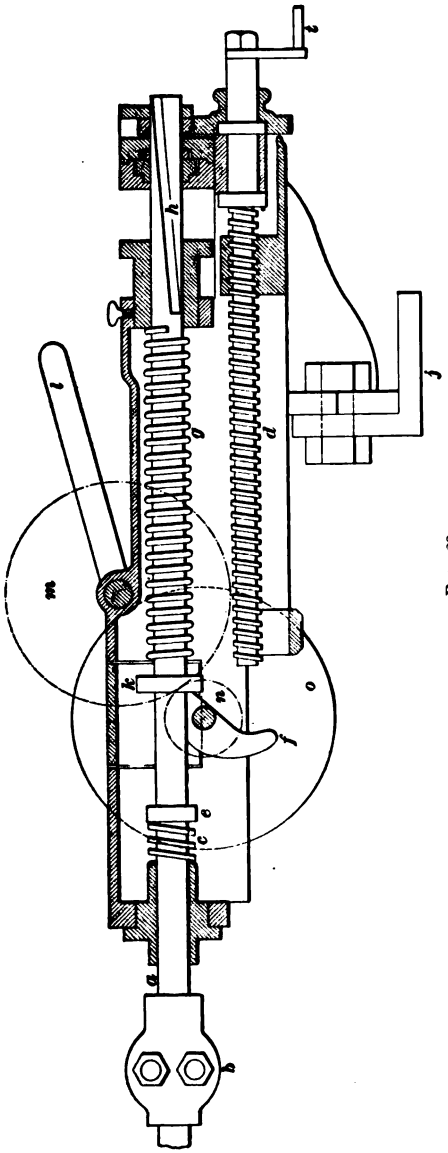

FIG. 23.

47. Fig. 24 shows a Jones hand-power drill mounted upon a drilling column *c*, for drilling a breast or horizontal hole. The drill can be given any inclination by means of the clutch which is operated by the lever *l*, and when fixed in this respect it is further steadied by the stay-rod *r*, whose sharp end is driven into the face of the rock, and the rod

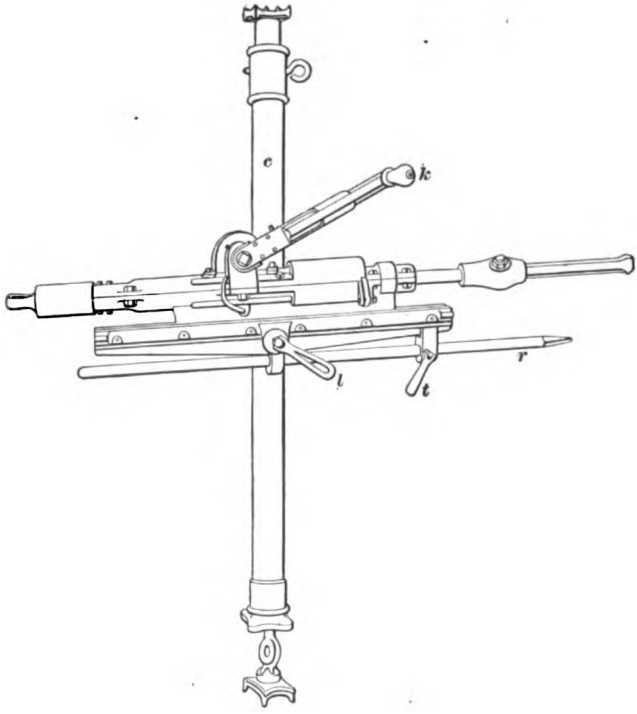

FIG. 24.

finally clamped by the lever *t*. The detail construction is shown in the sectional and side views in Fig. 25.

The guide shell *a* contains the feed-rack, which is engaged by the feed pawls *b*. The rubber friction shoe is controlled by the friction cam handle *c*. In operating the machine, the mutilated gear-wheel *d*, which is turned directly by the crank *k*, engages with the piston rack *e* and compresses the

spring *f* to its limit, when all is released and the piston and drill are driven forwards with great force. The feed is

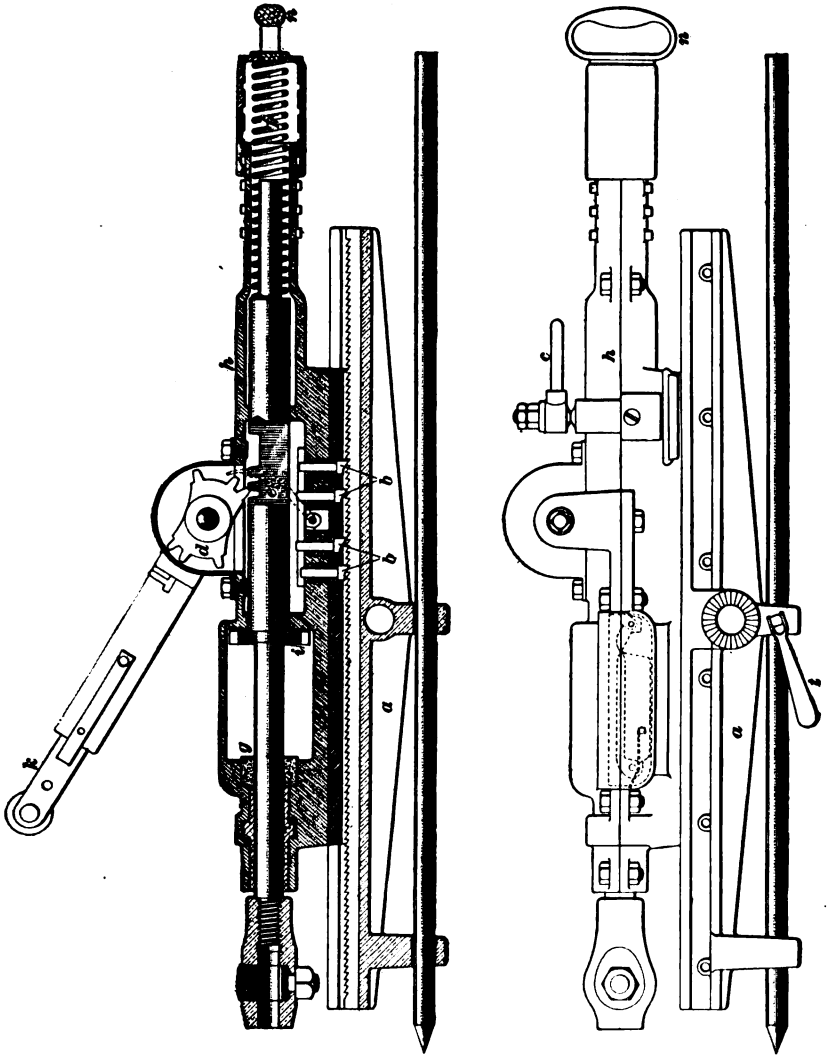

FIG. 25.

automatic, being produced by the shoulder on the piston striking against the buffer *g* whenever the hole is advanced

far enough. The amount the shell *h* is advanced will depend upon the force with which the piston strikes the buffer *g* and the pressure upon the rubber friction shoe. This advance is taken up by the feed pawls *b*, which are so arranged that the amount of feed or advance of the shell *h* may vary from $\frac{1}{16}$ inch to 3 inches per revolution.

The bit is rotated automatically by means of the wheel *i*, which rotates the piston on the back stroke. The piston is also prevented from turning either way on the outward stroke by a pawl, whereby fitchering is prevented, and therefore single-edged bits, which are more easily sharpened than double-edged bits, can be used.

An advantage of this drill is that it can be pulled back by the handle *n* at any time and the hole cleaned without turning any screw or removing the drilling column. In using hand-power drills, it is best not to drill holes over $1\frac{1}{4}$ inches in diameter.

48. Although the hand-power drill is more efficient than the hammer and jumper, it is less efficient than the steam, compressed-air, or electric drill, because there is more friction due to the moving parts and less motive power.

In percussive boring in rock, water is used whenever possible to assist in cleaning the holes of debris without interrupting the drilling, and at the same time it prevents the excessive heating of the cutting edge of the bit and its consequent loss of temper.

METHODS AND APPLIANCES FOR DEEP BORING.

49. There are various methods and appliances for deep boring by percussive action, some of which are very primitive and used only as makeshifts in rural districts where modern boring appliances are not available.

50. The most efficient makeshift for a regular deep-hole rig is the *spring-pole system*, which is sometimes used in drilling comparatively shallow holes for water-supply,

prospecting, etc., and is shown in Fig. 26. A slender tree with considerable spring in it is cut down for the spring-pole *P*. Its large end is embedded in the ground by digging a ditch in the direction which the pole must have when in place, and another ditch at right angles to the first one, in which the log *l* is placed over the large end of the spring-pole. At a point about midway between the ends of the spring-pole a support *S* is placed, giving the pole an inclination of about 30 degrees. The large end of the pole and also the log *l* are then weighted down with stone, to prevent any

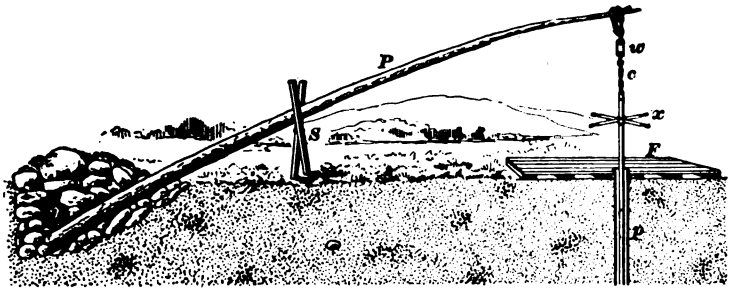

FIG. 26.

movement while the operation of drilling is going on. The bore rods are attached to the small end of the pole by a chain *c* and swivel *w* in such a manner that the drill-rods are held in equilibrium by the spring of the pole. The rods are operated by two or four men, who take hold of the handles on the cross *x* and alternately lift and force the drill-rods down, and at the same time turn them, either by walking around the top of the hole on the platform *F* or by passing the handles of the cross *x* from one to the other after each blow.

A number of short drill-rods are used near the top of the hole, so that the entire length of the rods can be lengthened whenever the cross *x* becomes too low for the men to effectively operate it. These short rods are finally replaced by a long one and again used as before.

Before starting the hole, it is necessary that a pipe *p* be driven into the ground to guide the rods, and in the

event that the surface is rocky, a guide hole is bored with the hammer and drill or jumper. In either case, the pipe or bore hole should be perfectly vertical, so that the hole proper will continue straight and vertical to the end. Water is poured into the hole when necessary, and the debris is taken out in the shape of slime or mud by means of a sand-pump, explained later.

With this method, the men have no weight to lift. Their energy is exerted in forcing the rods downwards, which, aided by the weight of the rods, causes the bit to strike the rock with great force. By means of the spring-pole method, holes can readily be drilled to a depth of 150 feet.

51. Sometimes when it is not essential to have a hole bored in any exact location, it may be started under a tree having a suitable branch which can be used to perform the same function as the spring-pole previously explained. Or, the drill-rods may be suspended from the middle of the branch and ropes tied to its end, which are pulled by men until the bit has reached the bottom of the hole and considerable slack is produced in the chain supporting the rods. Then, by suddenly releasing the ropes, the bit is made to strike the bottom of the hole a number of times by the vibration of the branch. The men then repeat the operation, and in this manner continue the hole to the required depth.

52. Early in the history of boring with rods, it was found that after a depth of about 300 feet was reached, the rods would break on account of the excessive vibration, and to overcome this difficulty, Kind and Chaudron invented the free-falling cutter. In this method a portion of the rods near the bit does the cutting, while the long line of rods above this portion is simply used to raise the lower part a short distance and automatically let it drop to the bottom of the hole. A piston about the size of the hole is attached to the bottom of the upper length of rods, and it is always kept submerged in water during the process of boring.

FIG 27.

Whenever the rods begin to descend, the resistance of the water upon this piston releases the lower portion of the rods, which falls by gravity and imparts to the bit its cutting force when it reaches the bottom of the hole. The top portion of the rods is slowly lowered and automatically connects with the lower portion, whereby it is lifted and the operation of falling repeated. By this method, holes are drilled to a depth of 1,200 feet more readily than they can be drilled to a depth of 300 feet by the solid-rod method.

53. In the American system of boring, a rope is used instead of rods to operate the tools at the bottom of the hole. This method is a great improvement over the Kind-Chaudron method, because there is no disconnecting of rods and the tools can be removed from the hole and replaced with great despatch. The cleaning of the debris from the bottom of the hole can also be done with equal rapidity.

FIG. 28.

DEEP PERCUSSIVE BORING APPLIANCES.

54. Fig. 27 shows a string of tools in a hole bored through different strata. It will be noticed that

the order of the tools is the rope, the rope-socket, the sinker-bar, the jars, the auger-stem, and the bit. The hawser-laid cable shown in Fig. 28 consists of three small ropes twisted to form one. This insures a maximum of elasticity and strength.

55. Fig. 29 shows a temper-screw by which the length of the rope is adjusted to suit the advance of the hole. The rope R is held in place by the jaws within the socket S T, which are forced together by the screw which is turned by the lever L. This socket is suspended by links to the swivel H. The rope is wrapped with tow where the jaws take hold, to prevent the threads from cutting. During the operation of drilling, the rope is twisted one way for a while and then reversed, and is advanced by turning the lever N. When the screw in the link A is run out, the threaded jaws at the lower end of the link A are separated by the screw J, and the screw within the link A is raised and the threaded jaws again adjusted by means of the screw J. This obviates the necessity of turning back the long screw, and thus greatly facilitates the work. The temper-screw is attached at E to a link suspended from the walking-beam, which will be explained further on.

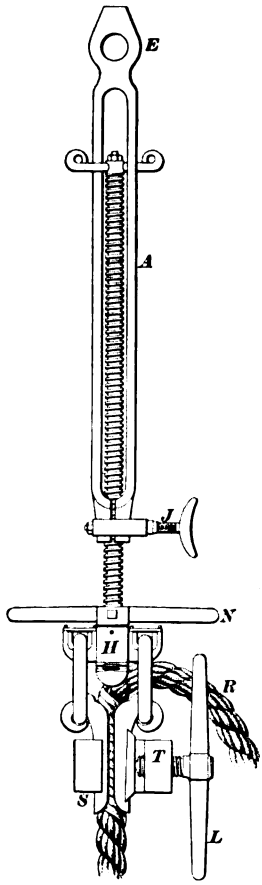

FIG. 29.

56. The rope is connected to the string of tools by the socket shown in Fig. 30. It is first placed through the upper portion U and the jaws S, S, and then tightly

clamped by screwing both portions *U* and *L* together with two wrenches, one placed on the square portion of *U* and the other on the portion *L* at *H*. The upper end *H* of the sinker-bar, shown in Fig. 31, is screwed into the socket at *L*, Fig. 30, and the lower end *F* is screwed on the end *G* of the jars, Fig. 32.

The upper end *K* of the auger-stem, Fig. 33, is screwed into the lower end *W* of the jars, and finally the bit is screwed into the end *T* of the auger-stem. The sinker-bar, which is about 18 feet long, keeps the rope taut and the upper part of the jars in line, and the auger-stem, which varies in length from six to forty-five feet, depending

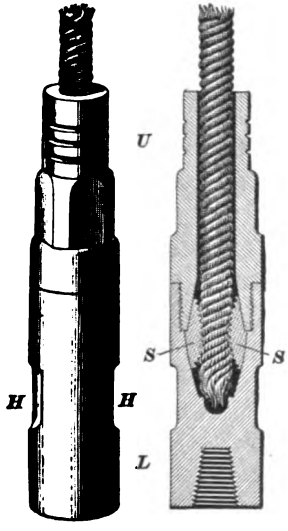

FIG. 30.

FIG. 31.

FIG. 32.

FIG. 33.

upon the size of hole and kind of rock, keeps the lower part of the jars in line and guides and imparts the cutting force to the bit.

The jars are about 7½ feet long, and consist of two links, which work within each other like two links of a chain. The object of this loose motion is to provide means by which the sinker-bar, when lifted, can strike a blow which readily disengages the bit and auger-stem in case they are wedged fast on account of the downward blow. In case the driller lets out too much rope, the upper portion of the jars will strike the lower portion during the downward stroke, and of course the bit will be lifted but a short distance during the upward stroke. Such an occurrence is made known to the driller by the jar felt in the rope. Sometimes the upper part of the jars is allowed to strike the lower part to procure a double blow when drilling through a very hard rock.

57. The bits used in deep boring are similar to those previously explained, except that they are provided with a screw on one end by which they can be attached to the auger-stems. Fig. 34 shows two kinds of bits generally used for deep boring. *A* is a three-winged bit, as shown by its plan *C*, and *B* is a ✚ bit, as shown in plan at *D*.

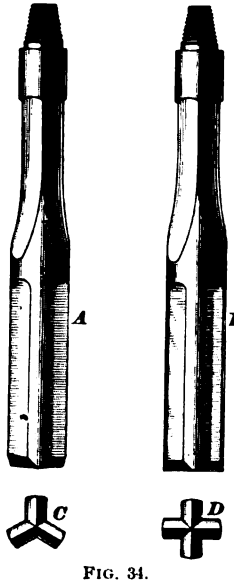

FIG. 34.

An experienced driller can determine with considerable accuracy the nature and thickness of each stratum passed through by the difference in rate of cutting and the feel of the rope. Examinations of the debris removed by the sand-pump are, however, depended upon for positive information.

58. The dimensions and weights of the several parts of an ordinary string of tools are approximately given in the following table:

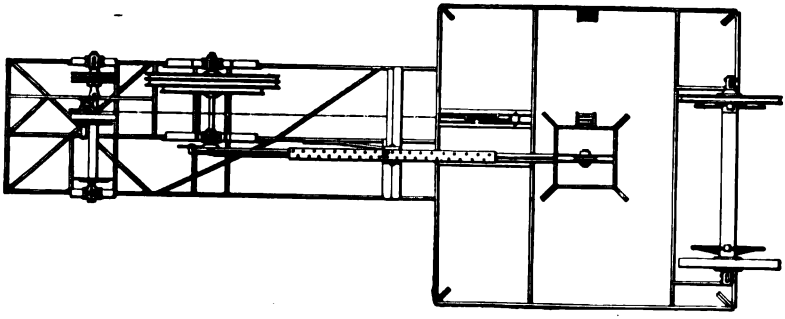

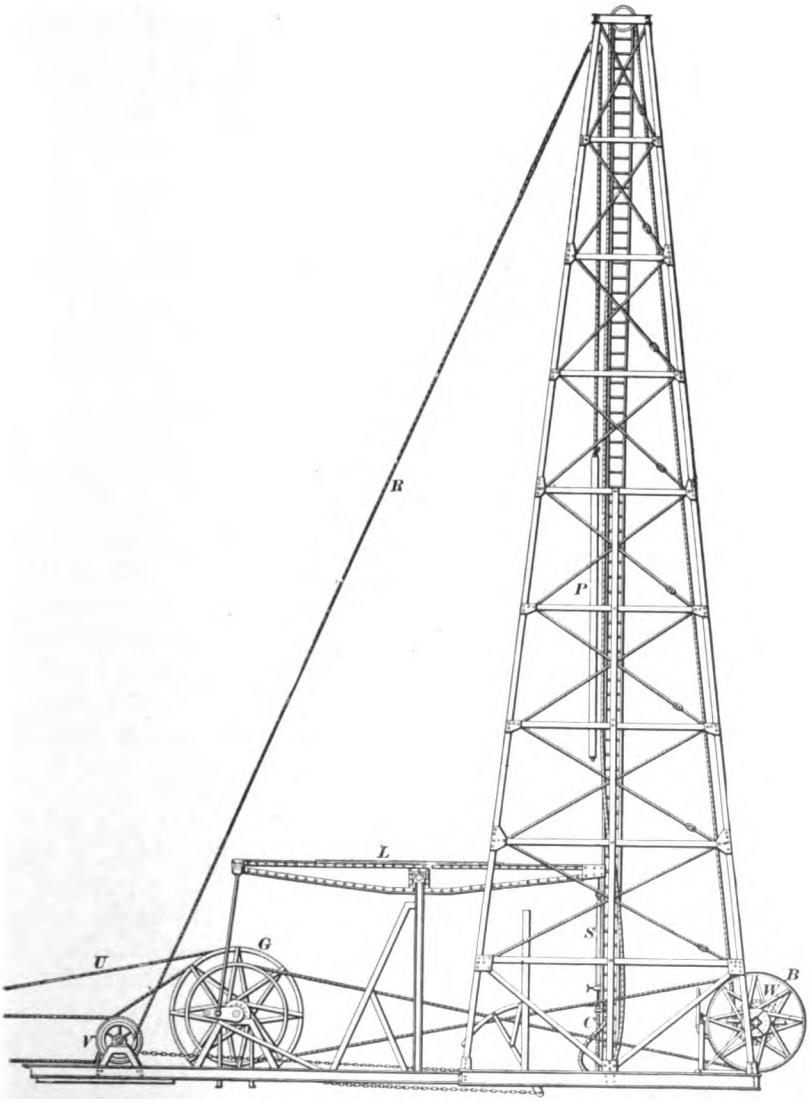

FIG. 35.

Name.	Length.	Diameter.	Weight.
Rope-socket,	3 ft. 6 in.		80 lb.
Sinker-bar,	18 ft.	3½ in.	540 lb.
Jars,	7 ft. 4 in.	5½ in.	320 lb.
Auger-stem,	30 ft.		1,020 lb.
Bit,	3 ft. 3 in.		140 lb.

59. Fig. 35 is a steel derrick, which affords an excellent illustration of the uses of the rope W, the walking-beam L, the bull-wheel B, the band-wheel G, and the sand-reel V. The walking-beam is directly connected to the string of tools by the temper-screw S and the rope C. The bull-wheel B and drill rope W are used for hoisting and lowering the tools. The sand-reel V is used to raise and lower the sand-pump P with the rope R. The band-wheel G is turned by the rope U which passes around the band-wheel on the engine.

60. Derricks are built of wood or structural steel and are about 20 feet square at the base and about 80 feet high, the size depending upon the length of the string of tools. The use of the walking-beam, which is actuated by a crank, is to lift and drop the tools alternately. It has a stroke of about 2 feet and an end velocity of about 6 feet per second, which is sufficient, as it is found that owing to the resistance due to the water and debris in the hole and lateral friction, the tools can not drop any faster by gravity. A velocity of 6 feet per second will cause an auger-stem weighing 1,200 pounds to strike a blow the mean cutting force of which can be calculated as follows: Suppose the cutting to be done through a space of ¼ inch, then the average cutting force =

$$\frac{6^2 \times 1{,}200 \times 4 \times 12}{2 \times 32.16} = 32{,}239 \text{ pounds} = 16.1 \text{ tons.}$$

61. Fig. 36 shows a wooden derrick at which a guiding drive or bore tube is being driven to place. The crank on the band-wheel C is connected by a short rope R to the boring rope at B. As the band-wheel rotates, its crank

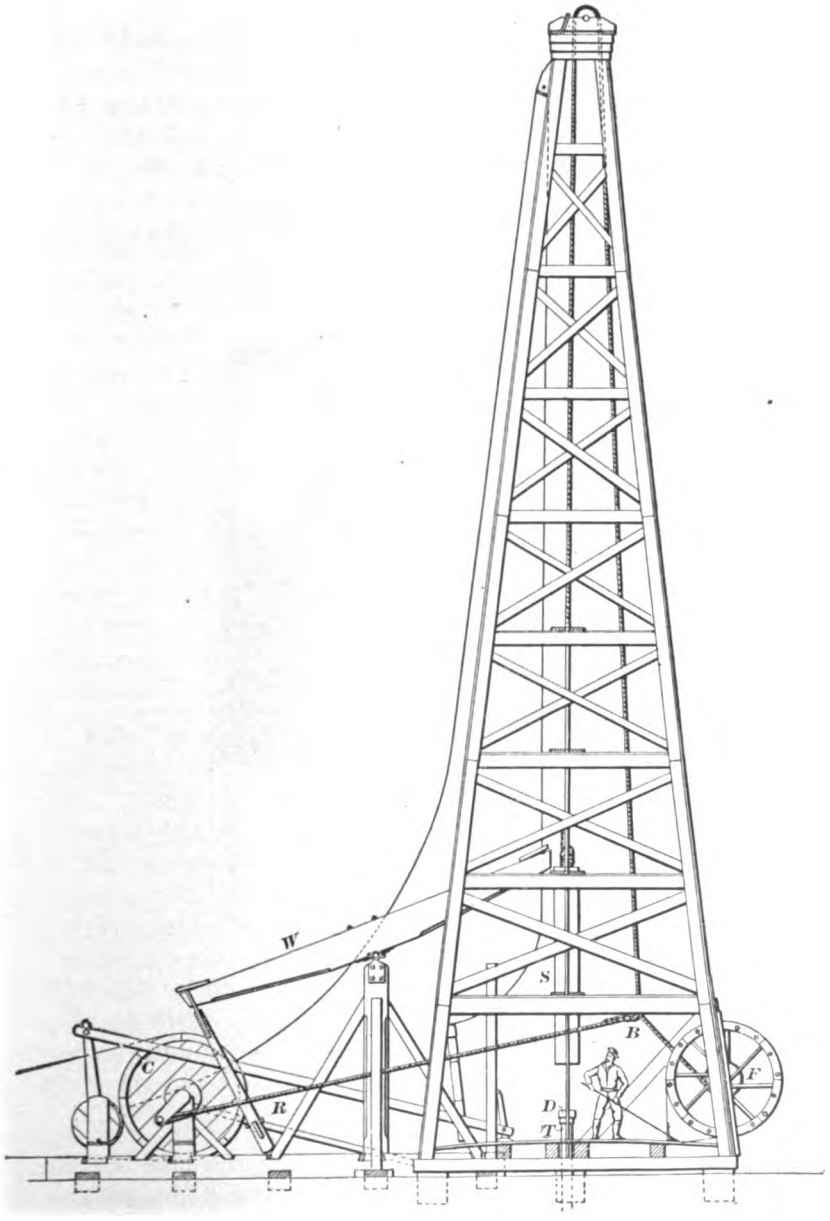

FIG. 36.

imparts a reciprocating motion to the short rope, which deflects the boring rope and lifts and then drops the weight *S* upon the drive head *D*. The tube *T* is thus driven into the bore hole. The man is regulating the operation by means of a band brake on the bull-wheel *F*. It will be seen that for this work the walking-beam *W* is disconnected from the crank on the wheel *C*.

62. Fig. 37 shows a sand-pump used to clean out the holes. A valve is placed near its lower end, and as the

FIG. 37.

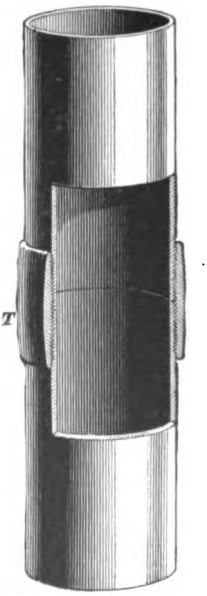

FIG. 38.

pump is worked up and down at the bottom of the hole the debris is forced into it and raised to the surface. The piston within the pump assists in filling the pump with the debris. The hole is generally cleaned out when the tools are taken out to replace a bit.

63. In sinking through soft ground, the hole is lined with a drive or guide tube, which serves the double purpose

of keeping back the ground and keeping the tools in a perfectly vertical position. Fig. 38 shows a portion of two drive tubes fastened together with a thimble *T*. Whether hard or soft, the upper portion of the hole is always encased for oil-wells.

Fig. 39 shows a drive head, which is screwed on the drive tube so that it can be driven into the hole.

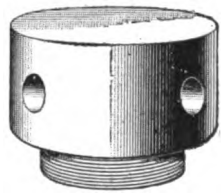

FIG. 39.

64. In measures with but little inclination the tendency of the drill is to cut exactly vertically, but in pitching measures there is a tendency of the bit to leave a vertical line when passing from a comparatively soft stratum into a harder one. This tendency is so strong that even most experienced drillers are sometimes unable to overcome it, though, as a rule, competent drillers detect it quickly, and take steps to prevent it. A hole not vertical throughout its whole length is very troublesome if for any reason it is desired to case it throughout or to pass a haulage rope through it, because the rope will strike the sides and will in a short time be ruined.

65. In casing holes, the general plan is to use a casing whose outside diameter is slightly less than the diameter of the hole, the space between the pipe and hole being carefully filled with Portland cement.

In case the hole meets a fissure in the rock which drains it or admits surface water, seed-bags are used to close such crevice until the casing is put in. They are also used to make a packing at the end of the casing tube previous to putting in the cement. These **seed-bags** are small bags filled with flaxseed, which rapidly swells when wet, and thus fills up the space to be closed.

66. Fishing or grappling tools are so numerous and of such great variety that it would be useless to touch upon them in this Paper. The operation of fishing for tools is indeed a business in itself. Reamers are also of many kinds,

and therefore but one will be given, more to show their use than their construction. Fig. 40 shows a reamer enlarging a hole, the upper portion of which is lined with drive tubes. It will be seen that the lower portion of the reamer neatly fits into the hole and makes the cutting projection cut concentrically to the hole.

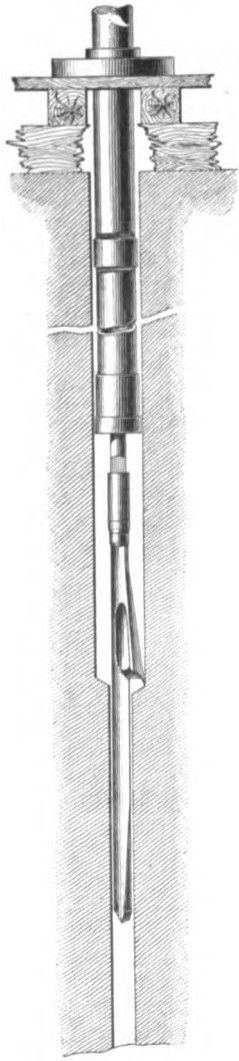

FIG. 40.

PORTABLE PERCUSSIVE-BORING MACHINES.

67. Experience in the oil country, particularly in Pennsylvania and Ohio, has proved that boring with the walking-beam is the most practical, consequently no effort has been spared to make an efficient and practical portable machine with a walking-beam. Many portable drilling-machines having a release gear for allowing a long lever, to which the tools are attached, to drop when it reaches its highest point, are built; but for deep holes they have been largely displaced by machines like that shown in Fig. 41. Such machines are drawn from place to place by horses, but sometimes they are provided with traction-gear run by the engine.

When the walking-beam *b* is not in use, the pitman *p* is detached from the wrist-pin on the crank which is at the far end of the shaft on which the pulley *x* is placed, and placed upon the ground as shown. The engine *e* drives the small pulley *d*, which in turn drives the large pulley *x*. The sand-pump *s* is raised

and lowered by the sand-line *l*, which is wound upon a reel actuated by the friction-wheel *w*. The operation of this machine is the same as that of a rig in which a walking-

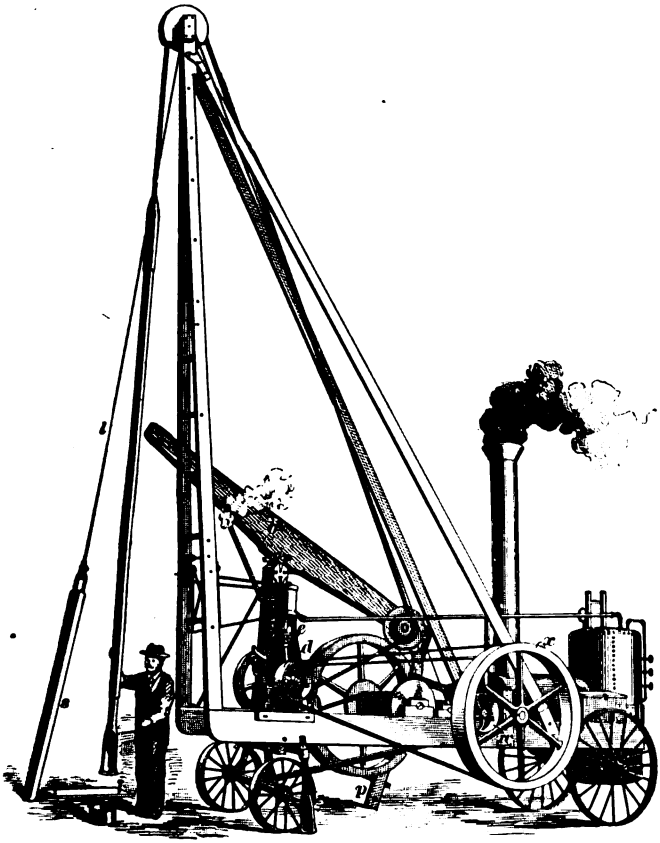

FIG. 41.

beam is used. It is provided with Miller's patent spudding and pipe-driving attachments, shown in Fig. 42, which are used principally for driving bore tubes and starting holes or boring down to the solid rock, or at least to a depth of 60 feet, after which the walking-beam is used.

The derrick D is placed upon one end of the machine, as

can be seen in Fig. 41. The transverse drive shaft *a*, which is rotated by an engine with any suitable connections, is also placed upon the main frame of the machine. This shaft has a crank to which one end of the rod *c* is attached by the

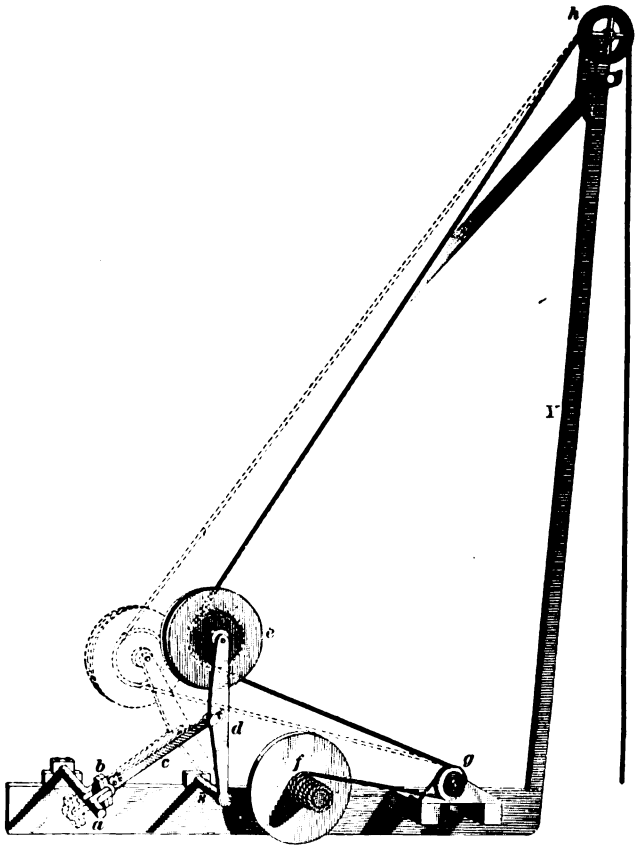

FIG. 42.

strap *b*. The other end of the rod is attached midway between the ends of the lever *d*, which is rigidly connected to the rocker-shaft *s*. The deeply grooved pulley *e* is journaled at the end of the lever *d*, and is adapted to receive the drill rope. It has a wide flange on one side to guide and steady the rope, which has a cumulative vibration during

the process of spudding, as drilling with this device is called.

The drill rope, which is wound upon the windlass *f*, passes over the guide-pulley *g* and the pulleys *e* and *h*, and its end is attached to the string of tools.

When the drive shaft *a* is rotated, the crank causes the lever *d* and the pulley *c* to move to and fro, as shown by the dotted lines. As this pulley is at the bight of the drill rope, it will be seen that the rope is alternately quickly pulled in and paid out and the tools given a reciprocating motion.

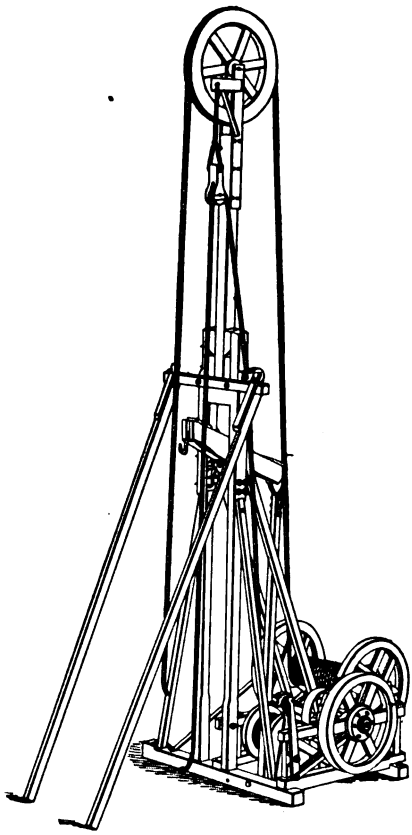

FIG. 43.

68. Fig. 43 shows a portable boring rig, which is moved from place to place in wagons; it is similar in its operation to other rigs and need not be explained after what has already been given.

ROTARY BORING.

69. Any form of boring in which the cutting-tool is turned and pressed forward at the same time is termed **rotary boring.** Except where the rock is hard, it is the most rapid and efficient, and even under such circumstances rotary boring is best if diamond bits are used

The action of a rotary bit differs from that of a percussive one in that it cuts in planes nearly perpendicular to the axis of the hole, while the percussive bit cuts in planes parallel to the axis of the hole.

FORMS OF STEEL BITS FOR ROTARY BORING.

70. A rotary drill with a steel bit can not bore a hole in very hard rock, and even in boring moderately soft rock great care must be exercised in order to give the bit the best form. For example, the bit of a rotary drill can not be made even approximately the same shape as a bit for a percussive drill. For example, if a bit shaped like that shown in Fig. 44 was forced deeply into the rock *R*, it could not turn, and if great force was used in an endeavor to turn it, it would break. Even if little pressure was put upon the bit when turning from *a* to *b*, as indicated by the arrows, the sharp edge would either break or turn over.

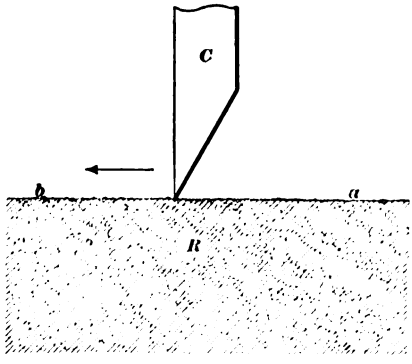

FIG 44.

It is not sufficient, however, to make the bit of such shape as will prevent it from taking too great a hold in the rock. For example, the bit *C*, Fig. 45, which is so shaped, can not be forced into the rock deeply because the angle *a b d* is nearly a right angle, making *b d* nearly parallel to the rock surface. Such a bit would be very strong,

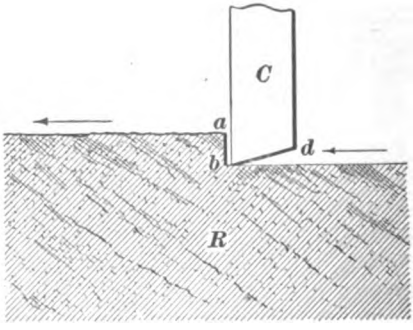

FIG. 45.

but it would form a step *a b* which would be very difficult to remove, and consequently the bit would require an enormous force to turn it in the direction indicated by the arrows.

71. The proper shape for a steel bit for rotary boring is shown in Fig. 46. The edge *b c* is nearly parallel to the rock surface, which prevents the bit from taking too great a hold in the rock. It will be observed that the edge *a b* is inclined so as to make the angle *a b c* quite acute, and at the same time throw the cutting edge *b* in advance, in order to give the bit a chance to both cut and lift the step at the same time. The material is therefore removed with the least amount of power when the bit *C* is rotated as indicated by the arrows. Figs. 44, 45, and 46 do not represent real elevations or perspective drawings of bits in holes, but simply show the principles upon which efficient or defective bits are made, and will therefore enable the student to understand the proper shape of good bits, which are shown in connection with the drilling-machines described later.

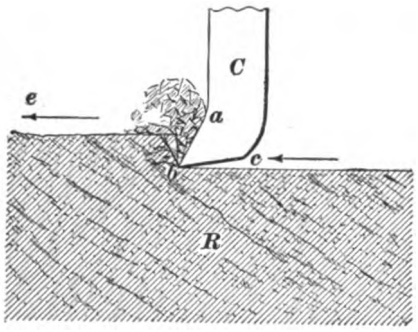

FIG. 46.

AUGER HAND-DRILLING MACHINES.

72. Hand-drilling machines for rotary boring are principally used in coal-mines and for boring in soft rock. There are three classes of these machines: (1) Those in which the cutting bit is advanced by a feed-screw having from 6 to 1¼ threads per inch and turned with a crank attached directly to one end of the feed-screw. (2) Those having variable feeders, which advance the bit 1 inch in

from 6 to 100 revolutions. (3) Those provided with a pawl and ratchet-wheel for boring holes close and parallel to a wall face; they are called **ratchets.**

POSTS AND GRIPS FOR HAND-DRILLING MACHINES.

73. On account of the reactionary force produced by all rotary drills, it is necessary to have some form of post or grip to hold such machines in place or up to their work.

74. A very common form of post is shown in Fig. 47. The post *P* is set up a short distance from the working-face and inclined with its foot inwards. The pin *p* is inserted into the bottom, or, if the bottom is soft, into a plank placed thereon, and the post tightened by the jack-screw being forced by means of the lever *j* tightly into a pick hole made in the roof. When this is done, the short drill *a* is put in the socket on the feed-screw and the drill run through the post. The nut or cup is placed in whichever notches will give the drill the proper elevation. The crank on the end of the feed-screw is then turned until the short drill has bored a distance equal to its length, when it is taken out, the nut screwed up to the socket, and the second drill *b* inserted. Finally, the third drill *c* is used, and this usually completes the hole. The twist on these drills automatically cleans the hole, but before the charge of powder is inserted a scraper is used to thoroughly clean it.

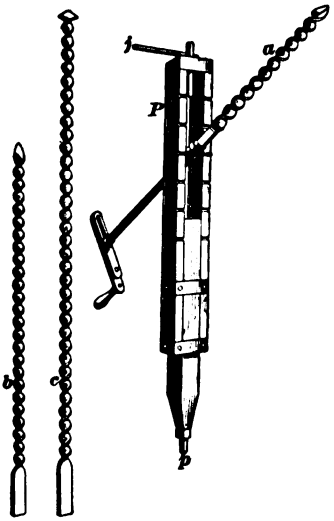

FIG. 47.

The reason several drills of different lengths are used is to produce steadiness and obviate the necessity of moving

the post forwards after each drill is advanced; for instance, if the long drill *c* is used first, the post *P* must be set back from the working-face so far that serious wabbling will be produced while turning the crank, and when the feed-screw has reached its limit the post will have to be moved forwards. The length of the post *P* is varied to suit the thickness of the seam at the place where it is to be set up by sliding the middle piece between the other two, and finally inserting iron pins in the holes which pass through the lower bands and the three pieces which comprise the woodwork of the post.

75. Fig. 48 shows an iron post with the lengthener at the top and the jack-screw at the bottom. This is the better arrangement where the seam is thick, but in any case where the seam is not over 6 feet thick it is more convenient to have the jack-screw at the top of the post. The feed-screw, and with it the drill, is turned by a system of bevel-gears and a side crank, which must be turned a number of times for each turn of the large gear-wheel on the feed-screw. There is a feather or projection within the large gear-wheel which works in a longitudinal slot in the feed-screw, by which means the feed-screw is turned and at the same time passed through the large gear-wheel. The frame carrying the gear mechanism slides upon the

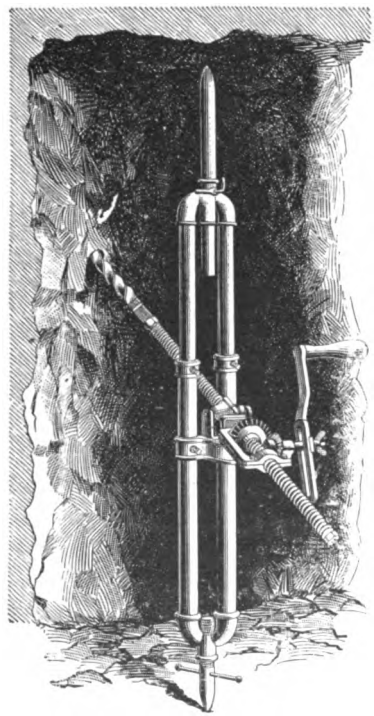

FIG. 48.

two legs of the post and is held in any position by set-screws.

76. Fig. 49 shows a post, the framework *P* of which is made of cast steel and is double for almost its entire length. The foot pin *f* is short, and the jack-screw *j* is placed at the top and turned by a wheel. This post is very rigid, and being notched from top to bottom, holes can be bored at almost any level. The drilling-machine used with this post is provided with beveled mechanism and two side cranks, and is used principally for drilling long holes approaching old workings containing accumulations of gas or water, providing transmitted energy, such as electricity or compressed air, is not available to run power drills.

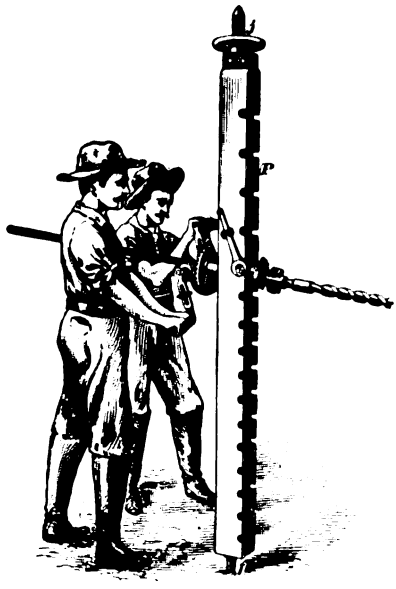

FIG. 49.

77. It often happens that the seam of coal is so high that posts are impracticable; in such cases, grips which are fastened to the working-face are used. Fig. 50 shows a very simple form of grip.

In setting up this grip, a short hole is bored near where the regular hole is to be started and the bar *g*, which has several upward teeth on its end, is inserted in the hole and an iron wedge driven in below it. This securely fastens the bar, and the teeth which are forced into the top of the short hole near its back prevent the bar from being pulled out by the reactionary force of the drill. The support which holds the cup *b* is pivotally connected to the end of the bar *g*, and adapts itself to the direction of the reaction-

ary force produced by turning the feed-screw *f*. The preliminary hole is drilled with a churn-drill, or special small

FIG. 50.

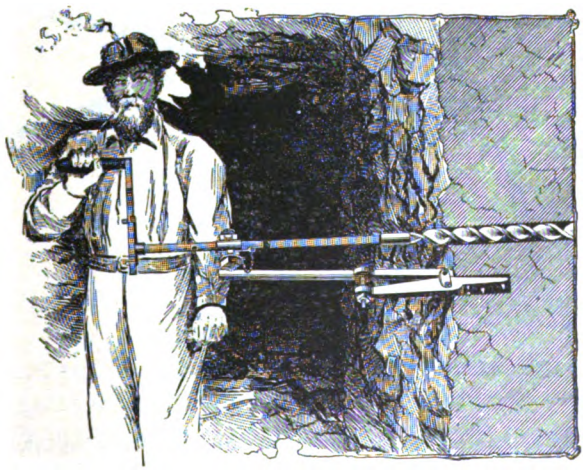

FIG. 51.

auger as seen standing with the drills at the face. The crank shown is of the duplex type, and enables the operator

to use both hands. It is evident that holes can be bored in many directions with one setting of the bar, and an old hole may form a support for the bar.

78. Fig. 51 shows an excellent grip, which can be put in place quickly, there being no wedge required as in Fig. 50. Aside from the rapidity with which this grip can be set in place, it has the additional advantage of gripping the coal or rock at the back of the preliminary hole, and consequently the material surrounding the grip does not become shattered and allow the bar to fall away during the operation of boring, as is often the case when a wedge is used to fasten the bar to the coal or rock.

AUGER POWER DRILLS.

79. Fig. 52 shows a rotary drill run by compressed air and also fed by air. The engine which drives the drill is a

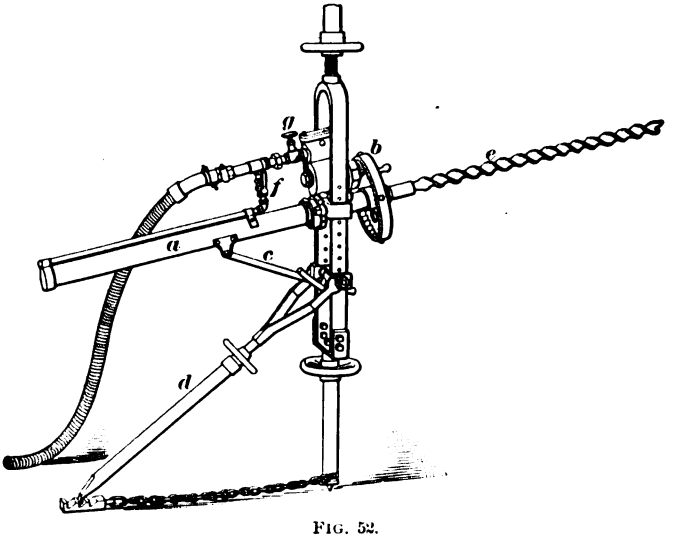

FIG. 52.

small rotary one placed between the bifurcations of the post and above the supports which hold it in any desired position. Instead of a feed-screw, there is a piston-rod in the cylin-

der *a*, which is acted upon by the air, and forced outwards as the hole advances. The small pinion on the motor shaft gears internally with the wheel *b*, which turns the piston-rod and auger *c*. It is clear that while the wheel *b* turns the piston, it also permits it to move longitudinally. This is accomplished by means of a feather and slot, as in other drills. The brace *c* supports the extra weight at the rear of the post, and the brace *d* makes the post more rigid. The auger can be advanced with a constant pressure, and therefore the bit is not likely to break when it meets any hard substance. The air is admitted to the cylinder *a* through the valve *f*, and to the rotary engine through the valve *g*.

80. Fig. 53 shows a Jeffrey rotary electric coal drill. A small motor of from 1½ to 4 horsepower is enclosed in a

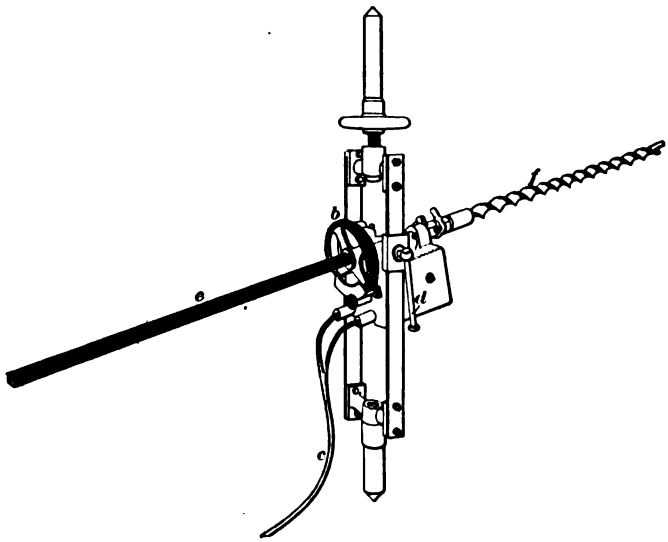

FIG. 53.

case, and on the end of its armature shaft is a small pinion which gears with the large wheel *b*. The current is supplied through the cable *c*. The drill can be given any elevation and clamped at any level by the lever *d*. It will be noticed that there is a longitudinal slot in the feed-screw *e*, in which

a feather or projection on the gear-wheel *b* runs as the feed-screw and drill *f* are turned. There are two drills used for each hole over 3 feet deep; one is 3 feet long and the other 6 feet long. The time required to drill a 6-foot hole in ordinary bituminous coal with this drill is from 1 to 4 minutes.

THE RATCHET.

81. It frequently happens in mining work that holes must be drilled close to and parallel with the roof, floor, or sides of an entry or breast. This can easily be accomplished with such machines as shown in Figs. 54 and 55, providing it is not required to bore the holes closer than a few inches to the roof, floor, or sides of the working place and the material is not very hard; but where the holes must be bored next the roof, floor, or sides, or some distance from them, in reasonably hard rock, such as soft sandstone, the ratchet is used. It is the most rigid of hand-drilling machines for rotary boring.

82. Fig. 54 shows a very strong form of ratchet which is largely used for tunnel and mine work. This ratchet is shown in position for drilling a hole in the rock overlying

FIG. 54.

the coal. The tube *t* is about 2½ feet long and 3 inches in diameter, and has the threaded nut *n* welded to one of its ends. The feed-screw *s* is turned by the lever *h*, which

operates a ratchet-wheel just back of the socket in which the end of the drill is placed.

To set up the ratchet, a short hole is dug in the proper place on the face of the rock, and another in the roof back from the rock face a distance a little greater than the combined length of the shortest drill and the ratchet. One end of the post *p* is then inserted in the hole in the roof, and the other end is placed upon an inclined tie as shown, and finally the post is tightened by striking it near the bottom with a

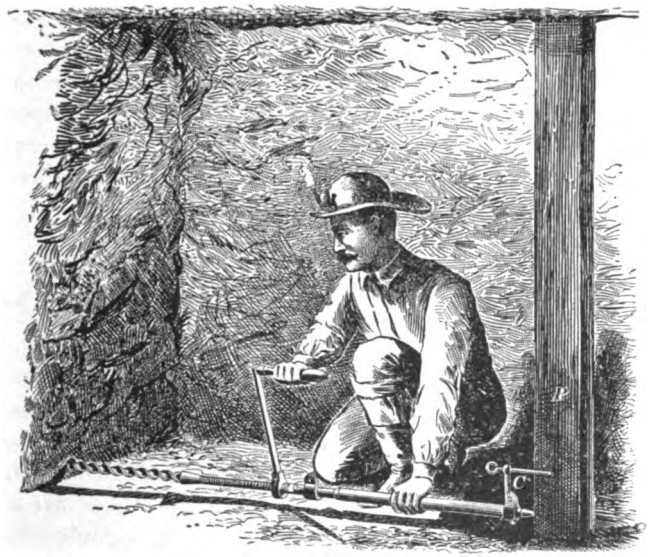

FIG. 55.

sledge or hammer. It is evident that the greater the reactionary force the tighter the post will get. The end of the shortest drill is then put in the socket of the ratchet and all is lifted near the roof and the bit of the drill inserted in the hole which was picked in the face of the rock. The rear end of the tube *t*, which is made slightly conical so as not to split the post and at the same time not slip when the drill is being operated, is finally placed against the post and the ratchet and drill tightened in place by turning the tube or operating the handle *h*.

When the feed-screw *s* is run out and the short drill advanced as far as possible, the ratchet is taken down and the next longer drill inserted, and the operation repeated until the hole reaches the required depth. During the operation of the ratchet the tube is prevented from turning by a curved pin engaging with the post *p*. Owing to the heat and friction produced by boring with the ratchet even in moderately soft sandstone, the bits must be changed and sharpened frequently.

83. Fig. 55 shows another form of ratchet in place for boring a hole close against the bottom. In this case it is not necessary to incline the post, for almost the entire reactionary force is resisted by the lower end of the post *P* which is inserted into the bottom. The man is operating the machine, and it will be seen that the tube is prevented from turning by the lever and pin *C*.

APPLIANCES USED IN DIAMOND DRILLING.

84. The diamond drill consists essentially of a tool having black diamonds or carbons set in its face, and so arranged that the tool can be rotated in such a manner as to cause the diamonds to cut the rock, while a stream of water removes the cuttings as fast as they are formed. The piece in which the diamonds are set is called the bit. The string or line of rods which connect the bit to the operating mechanism is called the drill-rods. In mining work, diamond drilling is usually done with the intention of bringing a solid core of the material passed through to the surface, and in such a case the bit is practically a section of pipe having diamonds set in its lower face.

FIG. 56.

85. Fig. 56 illustrates a diamond bit having diamonds *a*, *b* set in its face. The diamonds *a* cut on the outside and face of the bit, while the diamonds *b* cut on the inside

and on the face of the bit. The diamonds make sufficient clearance to permit the flow of water within and without the steel cylinder or thimble. Radial grooves are usually made in the face of the thimble between the diamonds, for the purpose of providing an easy passage for the water which carries away the debris.

86. When it is not desired to obtain a core from the formation, a bit with a solid face may be used. This is in reality simply the end of the bar of iron or steel having diamonds so set as to remove all the material before it. Water to wash away the cuttings is furnished through small holes drilled between the diamonds in such a manner as to connect with the hole in the drill-rods.

87. Two kinds of diamonds, carbons and borts, are used in setting bits for diamond-drill work. The carbon is found in opaque nodules of irregular shape, black on the outside, and of various shades of gray when broken. It has no cleavage planes, differing in this respect from the brilliant, and thus is especially fitted for diamond-drill work in hard rock, on account of the fact that the carbons simply wear away gradually without splitting or cleaving. The borts is really a semitransparent or poor diamond. In general appearance the rough stone is similar to a rough brilliant, but has a somewhat different crystallization. Carbons are found in Brazil, borts in Brazil and South Africa. For hard rock the drills are set with carbons alone; for medium rock, with part carbons and part borts; for soft rock the bit is occasionally set with borts alone. Borts are as hard as the carbons, but are not as tough. Having cleavage planes, they shatter if used in certain classes of hard rock, while the carbon will wear away slowly without danger of breaking.

88. Fig. 57 shows the bottom of a diamond-drill hole in plan and section. The core C is formed by the bit cutting out the annular space $A\ S$. In order to bring this core to the surface, some device must be provided for breaking it off at the bottom and for holding it in the tubes while it is

being hoisted. The breaking of the core and the holding of it in the tubes is accomplished by means of a core-lifter, which consists of a ring so constructed that it will grip the core near its base whenever the rods are raised. Fig. 58 shows one form of core-lifter ring, and Fig. 59 shows the shell in which it operates.

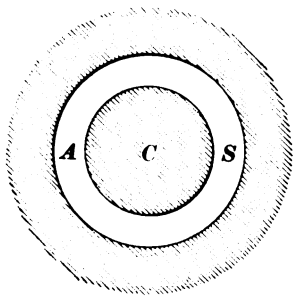

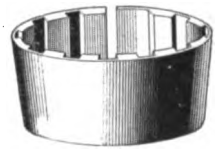

FIG. 58.

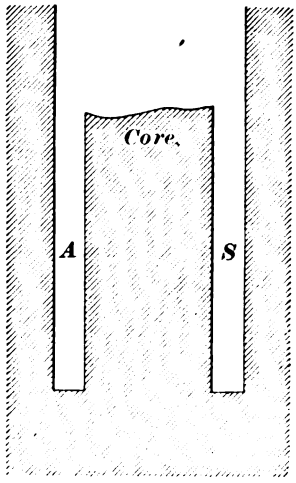

FIG. 57.

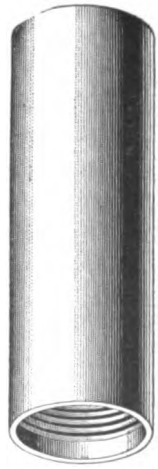

FIG. 59.

89. Fig. 60 illustrates the entire line of tools and appliances used in the ground for diamond drilling. It is a vertical section through a diamond-drill hole. The stand-pipe *n*, which is provided with a shoe *o*, is driven into the ground until it reaches bed-rock, for the purpose of protect-

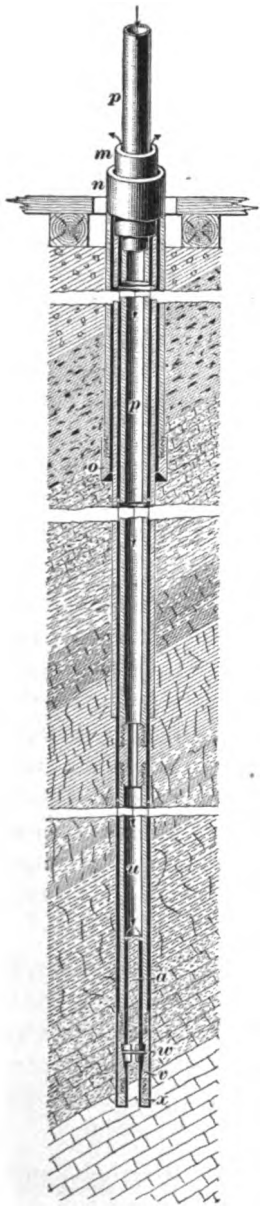

FIG. 60.

ing the drill hole. The casing *m* is put down through the upper formations, which tend to clog the hole or carry off the water used in drilling. The drill-rods *p*, which transmit power to the bit, are connected to the core-barrel *u*, which in turn is connected to the core-lifter shell. The bit *x* is screwed on the lower end of this shell. The water which is forced down through the center of the drill-rods *p* passes under the bit and carries the cuttings up through the annular space between the rods and the hole, or the rods and the casing, as indicated by the arrows. When the rods are lifted from the hole, the core-lifter ring *w*, which is always in contact with the core, slides down into the tapered recess in the core-lifter shell *v*, and bites or grips the core so as to break it off and retain it in the core-barrel.

The drill-rods are simply pieces of extra heavy pipe, and are joined together by inside couplings, which give a smooth external surface. The drill-rods are ordinarily in lengths of from 5 to 10 feet each, but where deep drilling is to be done the cost of these short rods becomes excessive, owing to the fact that the cost of so many couplings increases the cost and weight of the rods very much. Hence, for deep work special drill-rods from 20 to 30 feet long are sometimes employed. The drill-rods are always uncoupled in sections as long as the derrick will handle. There are

several other forms of core-lifters in use for special purposes, but this one has been selected as being the most common and illustrating the principle very well.

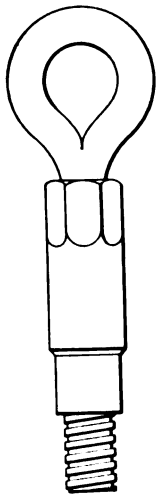

FIG. 61.

When it is desired to pull up an old casing or stand-pipe, this can sometimes be accomplished by means of an ordinary hoisting drum and rope. In other cases, it becomes necessary to put clamps on the casing and use jack-screws to pull it from the ground. By using sufficiently heavy screws, it is possible to exert a force which will part the casing or stand-pipe if it is too firmly embedded in the material, and then only a portion of the tube would be recovered. When the drill-rods must be raised for the extraction of the core or the renewal of the bit, the hoisting plug or lifting swivel, shown in Fig. 61, is screwed on the end of the rods.

90. For hoisting the rods some structure must be used. This may consist of a simple tripod made from three sticks of timber or poles. They are 20 to 30 feet long, joined at the top, and have a hoisting-block swung from the joint. If the hole is to be very deep, some more elaborate structure will be necessary, and in this case a special steel tripod, similar to that shown in Fig. 62, may be used, or a wooden derrick, similar to those used in the American Well-Boring Rig, may be constructed. As a rule, the simple tripod is all that is used for hoisting drill-rods in connection with diamond drilling.

91. In order that the diamond bit may cut properly, it has to be forced against the rock with great pressure while it is being fed forwards. To accomplish this, the machines which operate the rods must be provided with some form of feed mechanism. There are two general forms of feed mechanism in use, the differential feed and the hydraulic feed.

92. In the differential feed, the upper length of rods is provided with strong square threads and passed through

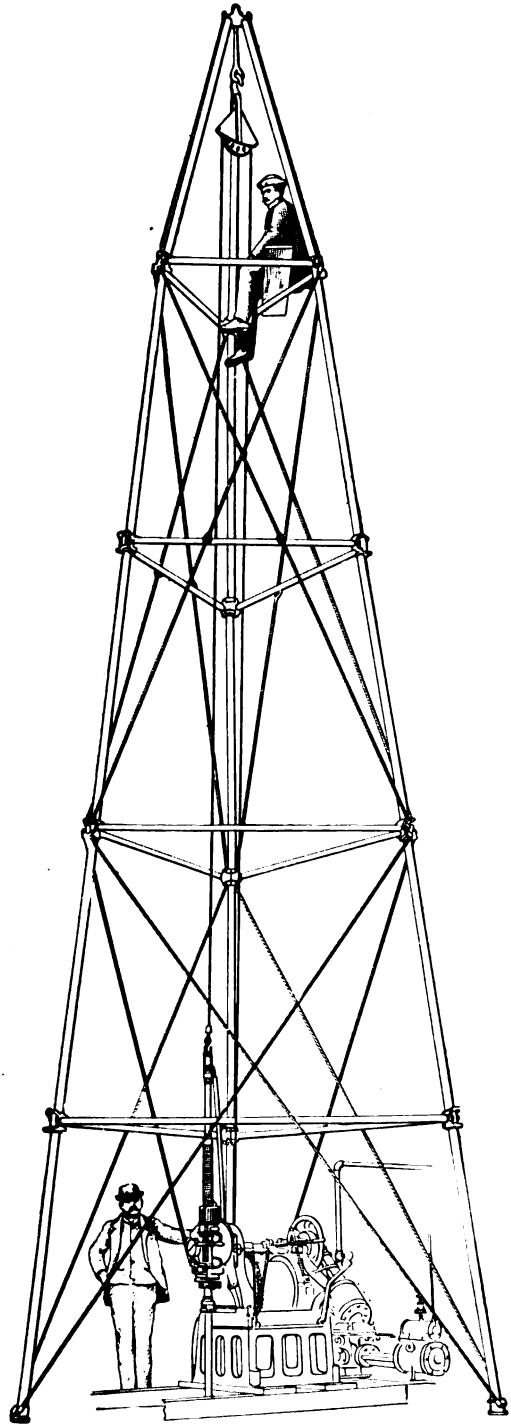

FIG. 62.

a nut which is rotated in the same direction as the rods, but not quite so rapidly, thereby causing a differential movement. To understand the principle of the differential movement, suppose the nut was held stationary, and that the rod and nut have each 2 threads to the inch, then for every two revolutions of the rod the bit would advance 1 inch, which is altogether too much cutting for the diamonds to do in two revolutions of the drill. Now, suppose again that the nut makes, say, 59 revolutions while the rod makes 60; the bit will advance only $\frac{60-59}{2} = \frac{1}{2}$ inch, or $\frac{1}{2 \times 60} = \frac{1}{120}$ of an inch for each revolution of the rod. Thus it is seen that a very small advance per revolution of the bit can be obtained by the above principle, and yet strong threads can be used to support the entire length of drill-rods.

93. If the differential feed were not provided with some method of relieving the excessive pressure, it would produce an enormous pressure whenever the bit encountered a hard formation. To overcome this, the feed mechanism is driven by an adjustable friction device, which allows the driving mechanism to slip with reference to the feed mechanism whenever the pressure upon the bit becomes too great. This slipping has the effect of giving the bit a finer feed in hard rock. Most machines provided with a differential feed have several sets of gears, by means of which the feed can be varied without the necessity of depending upon the slip of the friction device to produce finer feeds, the friction being intended only as a safety device.

94. In order to show the pressure on the bit, some machines are provided with special pressure registers or thrust indicators, which are so constructed that the thrust of the rods is received upon the pistons working against some liquid (usually glycerine), and the pressure of the liquid is shown by means of gauges. This device enables

the drill runner to tell instantly any change in the character of the formation through which the drilling is being done.

If the pressure on the bit, as shown by the gauge, rises, the driller knows that the bit has encountered a harder formation, and he reduces the feed by throwing in a different pair of gears or by changing the adjustment of the friction device through which the feed is driven.

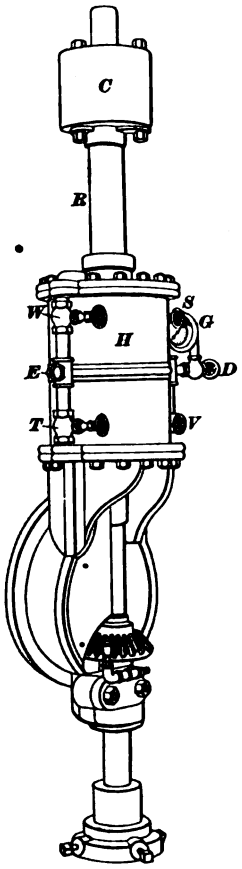

FIG. 63.

95. In the hydraulic feed, the pressure upon the bit is produced by water acting upon a piston in a vertical cylinder, and it is possible to observe at any instant the pressure upon the bit by means of a gauge on the cylinder. Consequently the driller can regulate the advance of the bit to the very best advantage. For instance, if the rock is hard the bit will advance slowly and the pressure in the cylinder rise, while if the rock is soft the bit will advance rapidly and the pressure in the cylinder fall. In the former case the driller lessens the supply of water, and in the latter case he increases it, keeping the proper pressure upon the piston and rods.

The water below the piston prevents the bit from sudden and rapid advance in case it is passing through a crevice or soft place in the rock, and in this way greatly protects the diamonds from sudden shock and possible displacement.

96. Fig. 63 shows a hydraulic-feed mechanism in which the ball bearings are incased as shown at *C*. The piston *R* moves in the hydraulic cylinder *H* as the drill-rods move, but it does not rotate as they do. Water is independently

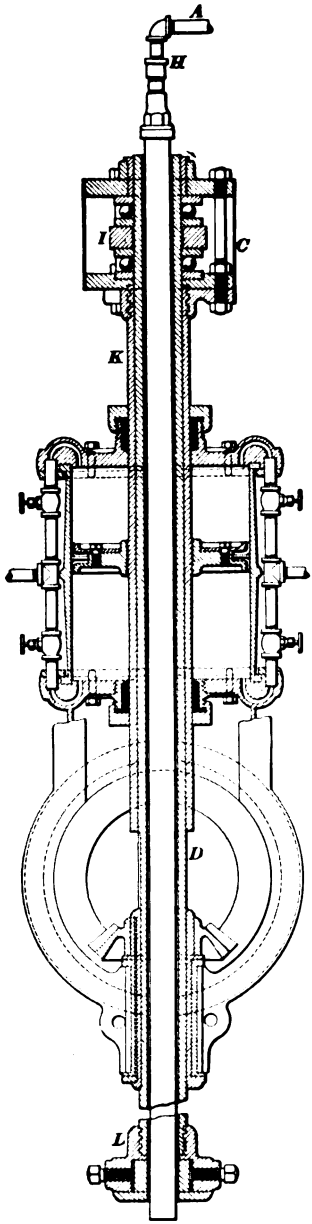

FIG. 64.

supplied above and below the piston within the cylinder by means of valves. The water is turned on by the valve *D* and admitted above the piston by the valve *S* and exhausted by the valve *W*. In like manner it is admitted and exhausted below the piston by the valves *V* and *T*, respectively. The valve *E* is the common exhaust. The pressure-gauge *G* is connected to the upper part of the cylinder, and registers the pressure upon the drill-rods and bit.

97. Fig. 64 shows a longitudinal section of a hydraulic-feed mechanism, in which the water-passages and the functions of the valves can readily be seen. The drive-rod *D* is connected to the drill-rods by the chuck or clamp *L*, and rotates within the hollow piston-rod *K*, being supported by the collar ball bearing *I* within the case *C*. Water is forced into the drill-rods through the pipe *A* and the swivel *H*. Reverting to Fig. 63, it will be now understood that in order to increase the pressure upon the bit, all that is necessary to do is to open valve *S* wider and, if necessary, close *W* somewhat, while at the same time *V* may be closed a little and *T* slightly opened. If, however, there is too much pressure upon the bit, the operation is reversed. There are

a number of ways of effecting the desired pressure, which can be readily acquired by a knowledge of the principle just given and a little experience.

98. The hydraulic feed just considered is termed the single-cylinder feed in contrast with the double-cylinder feed shown in Fig. 65. This machine has a hollow drive tube *T* connected to the two piston-rods *P*, *P* by the cross-head *C*. The two cylinders are shown at *H*, *H*, and the swivel connecting the water-supply pipe *F* and the drill-rods is shown at *G*. The water pressure upon the pistons is regulated in a manner similar to that previously explained.

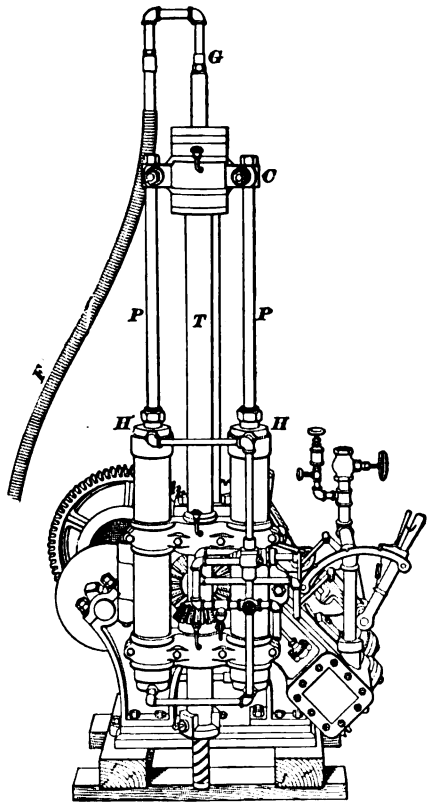

FIG. 65.

99. In order to resist the great pressure upon the bit and the drill-rods, some special form of bearing has to be used in connection with the diamond drills. In very small machines, friction-plates are sometimes employed. This bearing consists of a number of thin steel plates placed between the bearing faces. If the plates are perfectly true, there is a differential motion; that is, each succeeding surface moves more rapidly than the preceding, and so the wear is divided among the several plates. Another form of bearing which is very much used

is the ball bearing. This is illustrated at *C*, Fig. 64, and consists of a series of balls placed in a circular track or race between two plates. Most ball bearings for diamond drills are so constructed that they can take thrust in either direction; that is, they can take an upward thrust owing to the feed pressure upon the drill-rods, or they can take the weight of a very heavy set of drill-rods hanging upon them.

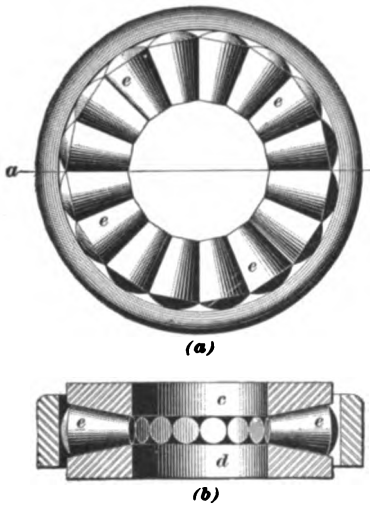

FIG. 66.

For heavy work there is a special form of bearing used by some makers. This is illustrated in Fig. 66, in which (*a*) is a plan and (*b*) a section through *a b*, and consists of two bevel plates *c*, *d*, between which are placed a series of conical rollers *e*, *e*, etc. The advantage of this form is that the conical rollers tend to travel in a circle, thus doing away with the pressure on the outside of the bearing caused by the balls having a tendency to go in a straight line. When a ball-thrust bearing is used to resist great pressure and to run at a high speed, this pressure of the balls against the outside of the track or race becomes excessive, and often results in the destruction of the balls and the bearing.

MACHINES USED IN DIAMOND DRILLING.

100. In order to give a clear understanding of the machines used in diamond drilling, it may be well to thoroughly explain one, and then refer to the different points in the others. Fig. 67 illustrates a machine having a capacity for moderately deep boring. The machine is driven by an engine having two steam-cylinders *H*, *H*.

This engine may be reversed by means of the reverse lever *I*. The large gear *K* is used to drive the hoisting drum *L*. The hoisting drum may be driven at different speeds by

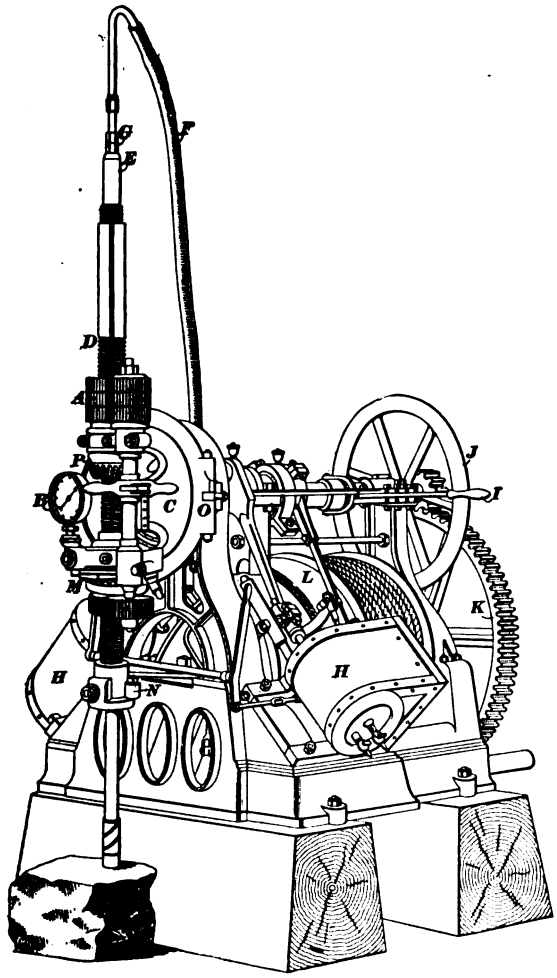

FIG. 67.

means of a series of change gears, which can not be seen in this view. The hand-wheel *J* is used to turn the engine

shaft and gearing when it is desired to throw in a different series of gears for the operation of the hoisting drum. The feed can be changed by means of the handle *C*, which throws in any series of the gears *A* or throws them all out. The roller bearing *M* receives the thrust, and is so arranged that it registers thrust in either direction by means of the thrust register and the gauge *B*. The chuck *N* at the bottom of the feed-screw *D* holds the drill-rods and drives them. The swivel *G* connects the water-supply pipe *F* to the drill-rods *E*.

There is a thread on the upper end of the feed-screw *D*, so that another chuck can be placed on that end of the feed-screw; or the chuck *N* may be placed at the upper end of the feed-screw when drilling upwardly inclined holes. This drill is provided with a swinging head. There is a latch bolt *O*, which can be loosened, and on the opposite side of the head there is a similarly constructed hinge. By means of this device the entire feed mechanism can be swung from over the hole. The feed mechanism is driven by means of a pair of bevel-gears *P*. When the mechanism is swung from over the holes, the bevel-gears are disconnected, and hence the drilling mechanism is thrown out of gear, so that the engine may be used to operate the hoisting drum *L* for removing the rods from the holes.

In this machine the engine cylinders are placed on the opposite sides of the frame. This gives a well-balanced machine, but at times other considerations make it desirable to place both cylinders on one side of the machine, as shown in Fig. 65.

101. Fig. 68 illustrates a very large diamond drill intended for deep boring. This machine has a capacity of drilling to a depth of about 6,000 feet, and it is provided with a single-cylinder hydraulic feed and has a ball bearing incased at *C*. This bearing takes the thrust or pressure of the drill-rods either while drilling or when they are hanging free in the hole. The hollow piston-rod does not revolve. The hoisting drum is placed on the back of the machine,

where it can not be seen in this view. The machine is driven by two vertical engines, placed centrally behind the feed machanism, as shown in the illustration.

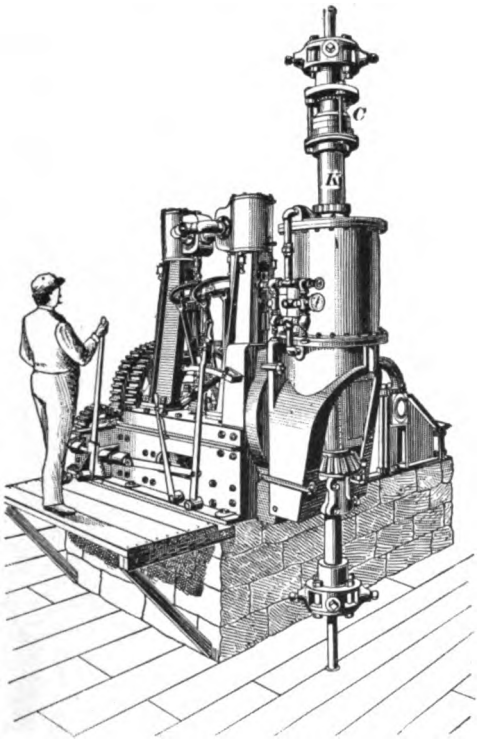

FIG. 68.

102. Fig. 69 illustrates another form of machine, which has a capacity of drilling to a depth of about 2,000 feet. It is provided with a double-cylinder hydraulic feed and has a fixed head, making it necessary to remove the machine from over the hole for changing the rods, and this necessitates some form of flexible or telescopic joint in the steam and exhaust pipes. In the machine illustrated this is accomplished by means of a bracket *C*, which holds the steam-pipe *A* and the exhaust-pipe *B*, so that as the drill is moved backwards or forwards, the pipes connected with the engines

work in and out through the stuffing-boxes shown in the illustration. The gearing for changing the speed of the hoisting drum *D* can be seen at the back of the machine. The large gear *E* is on the shaft carrying the hoisting drum, and when the small pinion *F* on the engine shaft is brought

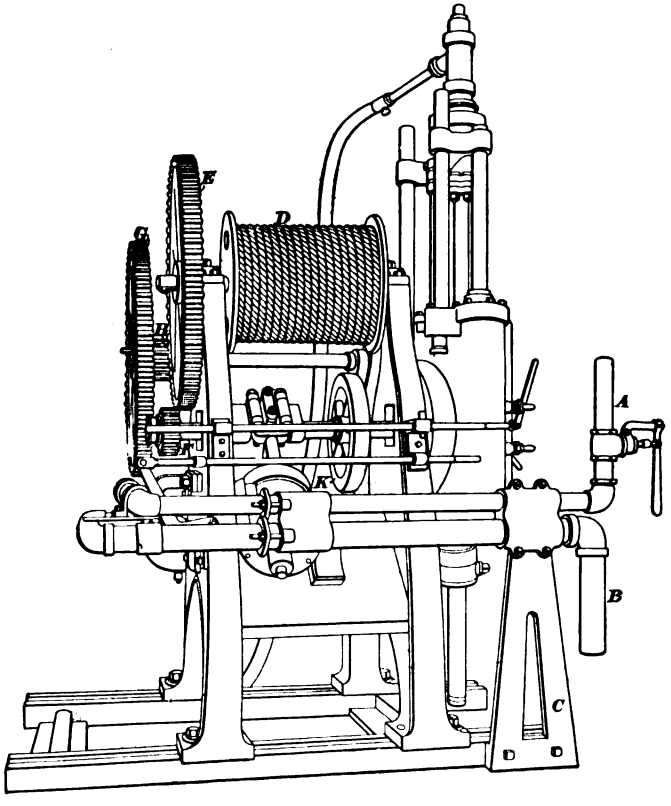

FIG. 69.

into mesh with this gear, the drum will be driven rapidly. On the other hand, if the gear *F* is brought into mesh with the gear *G*, and the pinion *H* into mesh with the gear *E*, the drum will be driven slowly. Of course, when the drum is driven more slowly by the same engine, it has greater lifting power. The small hand-wheel *K* is used in turning

the engine shaft so as to bring the gears into mesh with each other. The different combinations of gearing can not be changed while the machine is running.

103. Fig. 70 illustrates a small diamond drill mounted on a truck so that it can be taken from place to place easily. This style of mounting is especially useful when it is desired

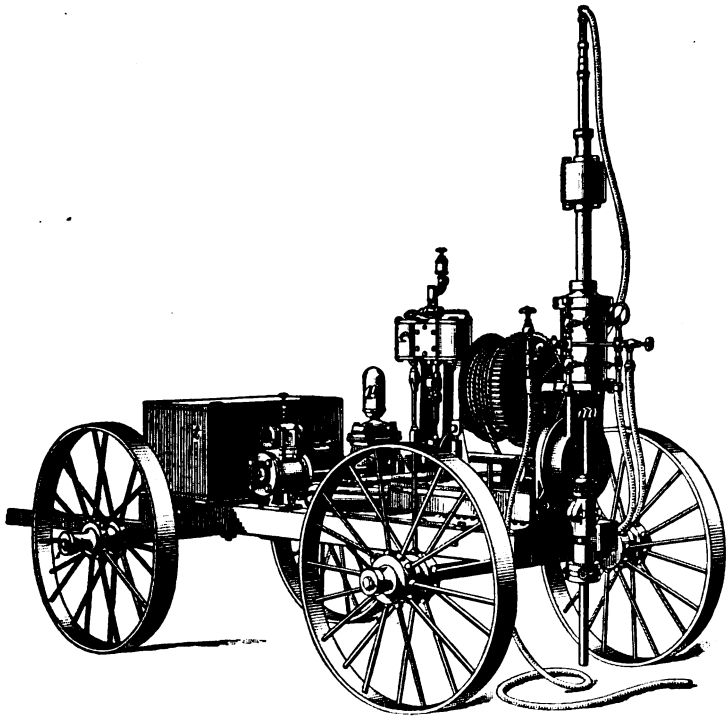

FIG. 70.

to drill a large number of comparatively shallow holes in the same locality. The feed-pump *p* furnishes water to the diamond drill. The tool-box *t* is placed at the front of the truck. The engine *e* is used for operating the drill. This drill is provided with a hoisting drum and a single-cylinder hydraulic feed; it is of the general class of machines having a fixed head, and hence must be removed from over the hole when it is desired to remove the rods.

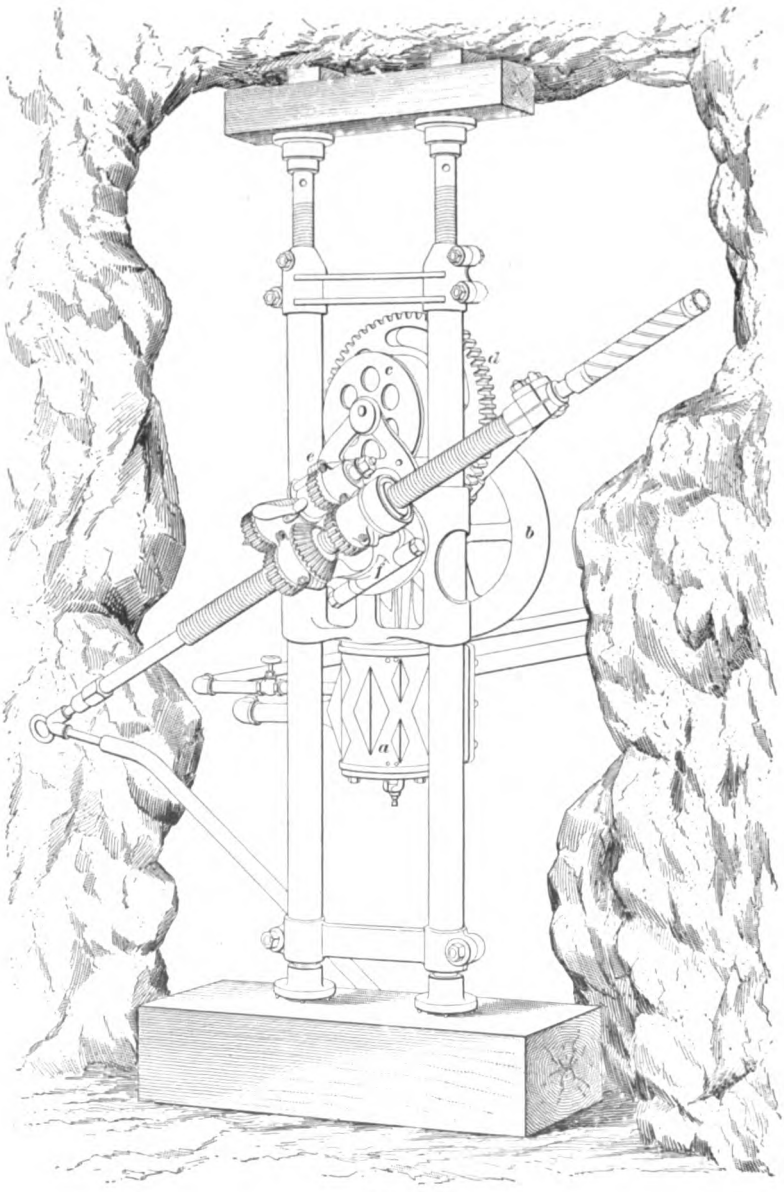

FIG. 71.

104. Fig. 71 illustrates a small diamond drill mounted on a column for work in a mine. Diamond drills are usually mounted on double columns, as shown in this illustration. This machine is driven by a single-cylinder engine *a*, and hence requires a fly-wheel *b*. The hoisting drum *c* is driven

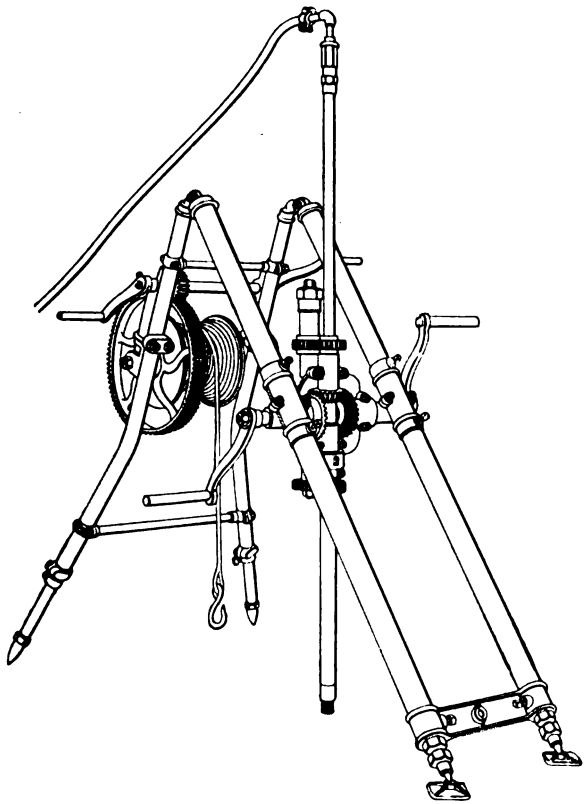

FIG. 72.

by means of the gear *d*. The machine as illustrated is set to drill an upwardly inclined hole. This machine is provided with a differential gear feed and with a swinging head. The bolt *f* for fastening the head can be removed and the head swung back on the hinge *f*.

105. Fig. 72 illustrates one form of a hand-power diamond drill. There is also a hand hoist attached to the back of the frame on which the drill is supported. This hoist is not regularly furnished with the machine, but may be attached when it is desired to drill comparatively deep holes. This machine can be adjusted for drilling at an angle, and is provided with a differential gear feed ; it can be driven by horses or a portable engine if desired, by simply removing one or both of the cranks and substituting a belt-pulley.

106. Fig. 73 is another form of a hand-power diamond drill which is mounted on columns *a*, *a*, provided with swinging joints where they are connected to the wooden frame by means of the swiveling pedestals *f*, *f*. The columns *a*, *a* can be adjusted to any angle with the wooden frame by means of the braces *p*, *p*. When the drill is used underground, it may be set up in a manner similar to that illustrated in Fig. 71, the screws *s*, *s* being placed against the roof of the opening.

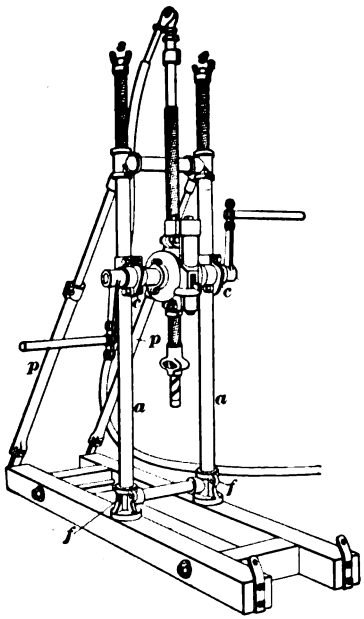

FIG. 73.

107. In order to remove the drills shown in Figs. 72 and 73 from over the holes, for handling the rods, the entire mechanism is usually moved. In Fig. 72 this can be accomplished by simply loosening the collars on the columns and sliding the drill down on the frame. By leaving the upper collars in place, the machine can be returned to exactly the position it occupied previous to the changing of the drill-rods. In the case of the drill illustrated in

Fig. 73, the same thing may be accomplished by simply loosening the bolts at the bearings *c*, *c* and lifting the entire mechanism out of its mountings. The mountings are provided with rectangular faces, against which the boxes fit, and so the machine can be replaced in exactly the same position it occupied previous to the changing of rods.

The hand-power diamond drills are usually guaranteed to bore holes from 350 to 400 feet deep, but have been used for drilling holes between 600 and 650 feet in depth.

THE VALUE OF THE RECORD FURNISHED BY THE DIAMOND DRILL.

108. This naturally divides itself into two parts:

1. The value of the record furnished by the core.

2. The amount of dependence that can be placed upon the apparent location of any point in a diamond-drill hole.

THE VALUE OF THE RECORD FURNISHED BY THE CORE.

109. With regard to diamond drilling, all ore bodies may be divided into three classes:

1. Bodies of material having a uniform composition, a low value per ton, and depending upon the existence of large masses for their market value, such as iron ore, salt, gypsum, coal, etc. The diamond drill furnishes an excellent means of prospecting for any of the materials that come under this class.

2. Bodies of material having a somewhat less uniform composition, a higher value per ton, and usually associated with more or less gangue, such as the ores of lead, zinc, copper, etc. The value of the diamond drill in prospecting for such formations varies inversely as the amount of the precious metals contained in the ore; that is, if a deposit is mined for lead, zinc, or copper, the ore must be of a somewhat uniform nature, while if it is mined mainly for the

precious metals, the value may and usually does vary from point to point, and in places the vein may be cut out entirely by horses or barren portions of rock. Thus, the liability of the diamond drill passing through abnormally rich or through barren portions of the vein is very much increased.

3. This class consists of rich veins of gold telluride or silver minerals, such as sulphides, etc. In prospecting for this class of material, the diamond drill is of very little use, for two reasons: (1) The valuable material is often so soft and friable that it is liable to become ground to a powder and washed away by the drilling water, thus leaving no record of its existence. (2) The veins are so erratic that the drill is liable to cut them either in barren portions or to follow a rich seam, thus giving indications very much above or below the true value.

The three divisions given above grade more or less into each other, but they serve as headings under which to consider the subject.

110. From the foregoing, the following general rule may be derived: *The value of the record furnished by the diamond-drill core varies inversely as the value per ton of the deposit sought.* Or, as stated in different words, the value of the record furnished by the diamond drill is greater when prospecting for low-grade uniformly distributed ores than when prospecting for high-grade irregularly distributed ores.

111. The diamond drill has been used with great success in prospecting for bonanzas or rich deposits of the precious metals, which occur in well-defined pockets or large masses. If the diamond drill encounters native copper, the metal clogs the space between the diamonds, thus preventing the boring, or it may even block the bit entirely, causing the rods to twist off. The diamond drill has been used very successfully in prospecting for low-grade gold deposits, such as the blanket reefs of South Africa.

112. When the diamond-drill hole cuts the formation at an angle, the core may show the angle the strata makes with the center line of the hole, but it gives no record as to the direction of the dip of the strata. Fig. 74 shows a diamond-drill hole passing through an inclined stratum, and Fig. 75 shows the core taken from the same formation. During the operation of drawing the rods from the hole, it is more than likely that the core will be turned from its original position, thus giving no idea as to the direction of the dip of the stratum. This may be in a measure overcome by the drilling of two holes near together and comparing the records. When a number of holes are drilled, the dip of the various strata is usually determined. When prospecting for deposits of the first class, this lack of information in regard to the dip is of less importance than when searching for thin veins of more valuable material.

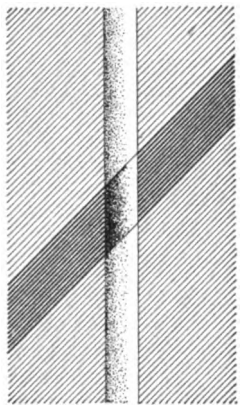

FIG. 74.

FIG. 75.

THE DEPENDENCE THAT CAN BE PLACED ON THE APPARENT LOCATION OF ANY POINT IN A DIAMOND-DRILL HOLE.

113. It was originally supposed that all diamond-drill holes were straight and true; that is, that in no matter what direction the hole was started, it would continue in that direction throughout its entire course, but as deposits discovered by the diamond drill came to be opened up, the lower ends of the holes were frequently found a long distance from their supposed positions. This variance led to a great many theories as to the cause of the *drift*, or change of direction, some advancing the idea that the drill hole had

a tendency to go across the rock formation, while others claimed that it had a tendency to follow the strata. In fairly hard and uniform material it was observed that, as a general rule, all inclined holes had a tendency to rise as they advanced, while vertical holes would sometimes take a spiral course or travel off to one side.

114. Fig. 76 represents a diamond-drill hole put down south of the present "D" shaft of the Chapin mine. After

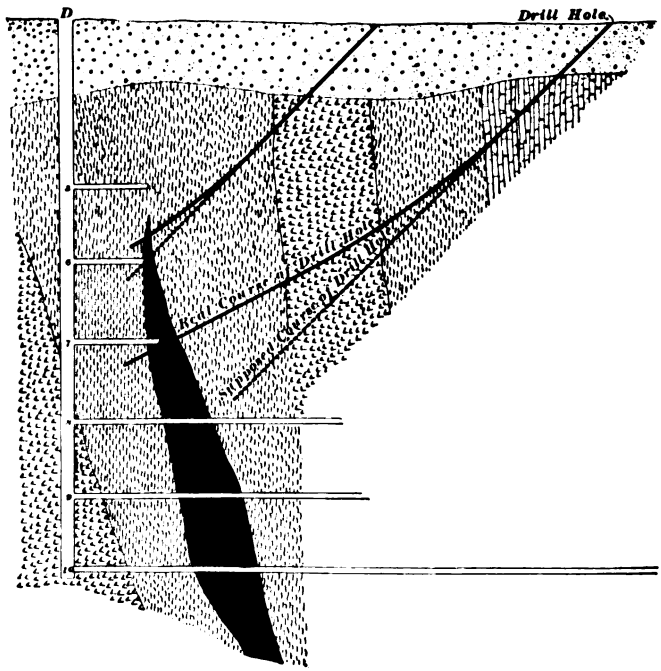

FIG. 76.

the shaft had been sunk and the drifts run out, the end of the hole was discovered 96 feet above and 70 feet south of its supposed location. The dotted line shows the supposed course of the drill hole, while the full line shows its real course.

115. Fig. 77 illustrates the course of a vertical hole drilled by the Hamilton Ore Co., and afterwards followed

down in the construction of their No. 1 shaft. *A* is the location of the hole on the surface, and *B* is the place where it disappeared 490 feet below the surface. The dotted lines

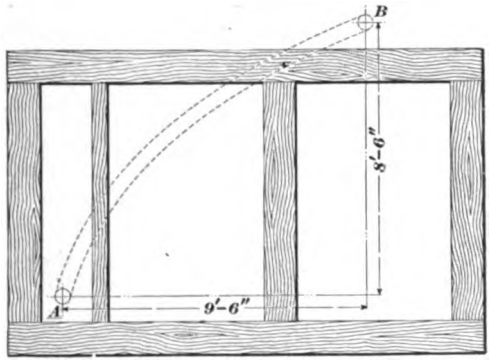

FIG. 77.

show the course of the hole for the 490 feet that it was followed.

116. The principles underlying this tendency to drift from the supposed course are very simple, and may be considered as follows:

Suppose, for example, that it was desired to drill a downwardly inclined hole through a hard and uniform rock, such as quartzite. The diamond bit is always of greater diameter than the rods which follow it. If this were not the case, and the bit were not kept absolutely to gauge, sooner or later the rods would stick in the hole. If the rods were the exact size of the hole, it would be necessary to cut grooves on the outside of them for their entire length, in order that the water which is forced down through the inside to cool the carbons and wash away the cuttings might be allowed to ascend on the outside. For these reasons, the drill-rods are always considerably smaller than the diameter of the bit. The core-barrel is sometimes made to fit the hole quite closely, being provided with spiral grooves on the outside, through which the water can ascend.

For simplicity, suppose that the hole had been drilled for a few feet perfectly straight, and with its end perpendicular

to the center line of the hole. Now, suppose that a full-sized bit with a very small core-barrel and rods were introduced to continue the work. They would assume some such position as that shown in Fig. 78; that is, the bit, being

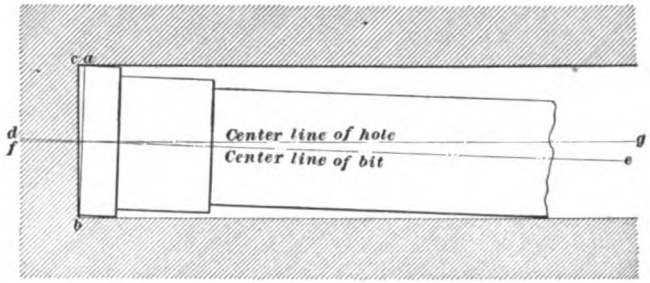

FIG. 78.

of the same diameter as the end of the hole, would of necessity occupy a position practically concentric with that of the hole, while the rods, owing to their flexibility, would sink down into contact with the lower side of the hole. This action would result in throwing the face of the bit into such a position that the plane of the end of the hole and the plane passing through the end of the bit would form an angle *a b c*. As the direction of the hole at any instant is perpendicular to the plane in which the diamonds rotate, it is evident that, with the rods in the position shown, the hole would have a tendency to progress along the line *d e* instead of along the line *f g*. In other words, the course of the hole would begin to rise, and as the drilling progressed, this tendency would continue and the course of the hole would be constantly ascending.

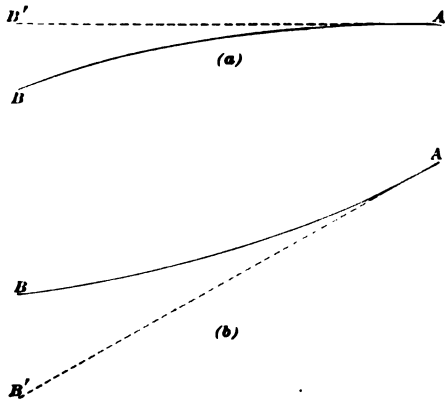

FIG. 79.

117. Fig. 79 is a sectional plan (*a*) and

elevation (*b*) of a diamond-drill hole illustrating this tendency to rise. The heavy lines *A B* show the actual course and the dotted ones *A B'* the proposed course.

118. The vertical rise is not the only tendency to drift caused by the rods being of smaller diameter than the bit. By referring to Fig. 80, it will be seen that if the drill-rods rotate in the direction of the hands of a watch, they will tend to roll to the right, into the position shown by the full lines. This would carry the point *A*, Fig. 81, over into the position shown. Now, it was seen that when the center of the rods at the point *A* dropped below the center of the hole, the course followed by the bit was an upward curve. In like manner this rolling action tends to carry the rods to the right, and the point of the hole would deflect to the left, as shown in Fig. 79 (*a*). In drilling through hard rock, great pressure has to be put upon the bit to make the diamonds cut, and this pressure increases the tendency to drift by springing the rods against the side of the hole. It has been claimed that at times the outside of the core-barrel may be forced into contact with the inside of the hole within 2 or 3 feet of the face of the bit, that is, when using small-sized bits not over 2 inches in diameter. Old or worn core-barrels are sometimes as much as $\frac{5}{16}$ of an inch smaller in diameter than the bit. Such a great difference in diameter causes the hole to curve very rapidly.

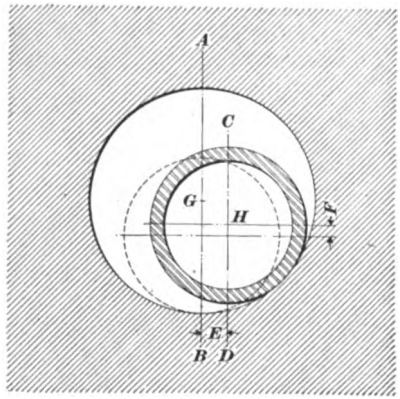

FIG. 80.

Reverting to Fig. 80, it will be seen that as the rods rolled to the right, through the distance *E*, their center was carried upwards through the distance *F*. This vertical rise

will tend to neutralize the angle caused by the point *A*, Fig. 81, coming into contact with the bottom of the hole. Hence, the horizontal drift partially neutralizes the rise.

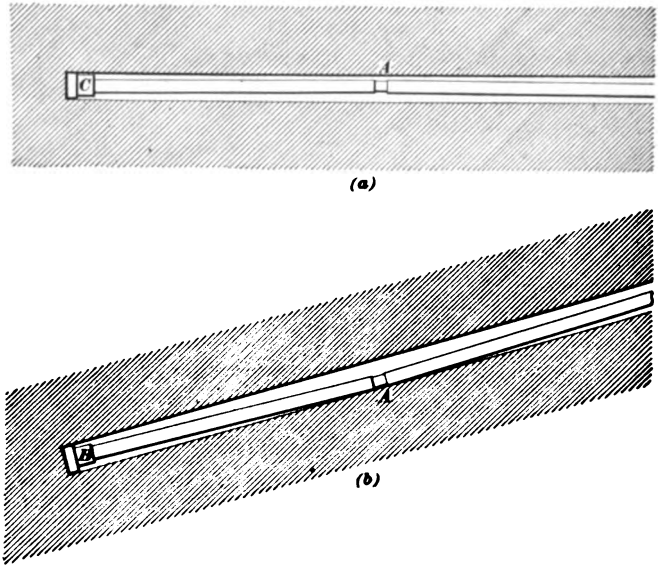

FIG. 81.

119. Unfortunately, all material drilled through is not hard and uniform in structure, many factors entering into the problem to complicate matters and carry the end of the diamond-drill hole from its supposed position. In drilling through soft material, the wear of the sides of the hole by the rods increases the tendency to drifting.

In some cases this drift in the diamond-drill hole may not be an altogether unmitigated evil, for if it were desired to make the end of the hole rise in order to reach a certain point in the formation, this may be accomplished by using a core-barrel very much smaller than the bit and by pushing the work as rapidly as possible. On the other hand, if it is desired to keep the holes straight, a core-barrel of practically the size of the bit may be used. It has also been proposed to use bushings set with diamonds and placed back

of the bit or core-barrel, thus keeping the center of the bit in line with the center of the hole.

At times, pockets, vugs, or open places are encountered in the formation, and frequently these are lined with very hard crystals. The bit coming against the face of one of these openings at an angle may be forced from its course. The hole may be at an angle to the strata passed through, and this will undoubtedly have an effect upon the drift, especially when the formation is composed of alternate layers of hard and soft material.

When drilling through soft material, the bit cuts very much faster and requires less pressure upon the rods. This reduces the tendency the rods have to spring against the side of the hole, and is one of the reasons why the bit has less tendency to rise less in drilling an inclined hole through soft material than when drilling through hard material. In drilling through soft material, such as hematite iron ore, the drill-rods are liable to wear large cavities along the course of the hole.

120. Surveying Diamond-Drill Holes.—Formerly it was the custom for the civil engineer in charge of the mine surveying to take the angle of the hole at its collar and plot this angle on his mine map, indicating the various strata passed through as occurring along this line and at their respective distances from the collar, as shown by the core. From what has already been said in regard to drifting, it is evident that these results were frequently very much at fault.

In 1880, Mr. G. Nolten, in Germany, proposed to fasten a small bottle partially filled with hydrofluoric acid into the core-barrel just above the bit, and to lower this to the bottom of the hole, leaving it in that position a sufficient length of time for the acid to eat a ring on the inside of the glass. Upon drawing the rods and the bottle from the hole, the surface of the liquid in the bottle could be made to coincide with the ring on the inside of the glass and this angle measured. By making such observations at frequent intervals

during boring, and plotting the results, a vertical projection of the hole can be obtained, as illustrated by (*b*), Fig. 79. But this gives no information as to the horizontal drift of the bit. One of these bottles which has been used and acted upon by the acid is shown in Fig. 82.

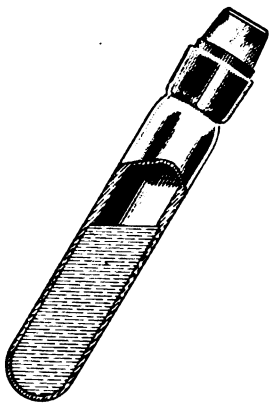

FIG. 82.

In case there is much water in the drill hole, it may be necessary to plug the upper end of the core-barrel with a piece of wood, in order to prevent the water in the rods above from forcing the bottle of hydrofluoric acid out of the bit while the rods are being drawn from the hole.

121. In 1883, Mr. E. F. MacGeorge, an Australian engineer, invented and used the following process: He filled small glass tubes with gelatine, in which were suspended glass plummets and magnetic needles. By heating the gelatine to 180° Fahrenheit, which rendered it liquid, inserting the tubes into the hole at various points and leaving them until the gelatine had solidified, he could, upon removing the tubes, compare the angles between the compass, the plummets, and the center of the rod. This information enabled the course of the hole to be plotted with fair accuracy. The method can be used where there is no magnetic attraction, but in the vicinity of some iron-ore deposits it would be of little or no use.

122. Fig. 83 represents a profile showing curvature of nine holes drilled and surveyed under the supervision of Mr. J. Parke Channing. In the case of hole number *1*, the core-barrel was fairly new; in number *2* a new core-barrel was introduced near the latter part of the work, and thus kept the end of the hole straight; number *3* was drilled before the core-barrel had worn much, and consequently it

has a fairly true course; numbers *4*, *5*, and *6* are more or less curved; in the case of number *7* it was desired to strike the formation at a certain point, and in order to accomplish this it was necessary to keep the hole from flattening if possible. This was attempted by using special couplings (made of steel and hardened), which were introduced between the rods and the core-barrel. They wore

FIG. 83.

away quite rapidly, and the attempt does not seem to have been very successful. In the case of number *8*, it was desired to make the hole rise as much as possible, and this was accomplished by using an old, worn core-barrel and a large bit. Number *9* was kept practically straight by using a new core-barrel and a bit with but little clearance.

PRACTICAL NOTES ON DIAMOND DRILLING.

123. Diamond drilling is carried on either from the surface or from the workings of a mine. The systems used in the two cases differ but little, but for the sake of clearness, the surface drilling will be considered first.

DRILLING FROM THE SURFACE.

124. In this class of work, only perpendicular or downwardly inclined holes can be drilled, and in most cases a complete power plant is required for surface prospecting; that is, not only the diamond drill, but its engines, together with the necessary boiler, pumps, etc., are required. The power used may be furnished by steam, electricity, compressed air, horses, or even men, as in the case of hand drills. Fuel for the power plant must be provided in case a boiler is used, and water must be provided for the use of the drill and the boiler, if one is used.

A tripod or derrick is required to assist in handling the rods and for use while sinking the stand-pipe, and a shanty or shelter to protect the men and machinery.

125. The diamond drill is intended for the penetration of rock formations only, being but very poorly adapted for work in loose gravel or sand; hence it is necessary to sink a stand-pipe through the surface drift material and then operate the drill-rods through this pipe. In case the rock formation below the drift is soft, it may be necessary to use a casing.

126. Preparation Work Necessary for Surface Drilling.—Having selected the location of the required hole, arrangements must be made whereby an ample supply of water may be obtained for the use of the drill and the boiler. Next, the stand-pipe must be sunk to bed-rock. In the case of fine sand or very soft material, such as occurs in swamps, the stand-pipe may be driven to bed-rock without any trouble, or a jet of water may be introduced to flush out

the material as the pipe is driven down. In the majority of cases, the drift contains a greater or less number of boulders, which interfere with the sinking of the pipe.

Where such drift is shallow, not exceeding 15 feet, it may be best to excavate to bed-rock and carefully secure the stand-pipe, the excavation then being filled and the drill placed in position. If the drift material is thick, and especially when it contains large quantities of quicksand or water, which would render excavating very difficult, it is often necessary to drive the stand-pipe to a great depth and to remove numerous large boulders from its course. These boulders may be broken up by drilling into them and blasting, or a hole of sufficient size to allow the introduction of the stand-pipe may be drilled through a very large boulder. This drilling is usually accomplished with a percussive bit. The percussive bit may be fastened to the end of the ordinary diamond-drill rods, or to similar rods specially provided for this purpose and made somewhat heavier.

127. At times it is found more expeditious to use a rig similar to the regular American Well-Drilling Rig, with jars, etc., for sinking the stand-pipe.

It is not an uncommon occurrence to have the stand-pipe break while trying to force it through ground containing boulders, and then it is usually necessary to pull it up and begin again. The stand-pipe must be chopped into the rock so as to form a good joint. If this were not done, one of two things would occur: either the surface waters would wash sand and gravel into the drill hole, or the water used in drilling would pass out under the stand-pipe into the soil. The stand-pipe may be put down by means of a portable hoist before the drill comes onto the ground. In this way the drill can be kept at its regular work, for if used in sinking the stand-pipe, it really becomes nothing more or less than a portable hoist while doing the driving.

Special rigs and devices have been designed and are furnished with diamond drills, by means of which stand-pipes may be drilled down through ordinary drift material. These

consist of pod-bits, auger-bits, percussive bits, casing bits, etc. In many cases it is quicker to put the stand-pipe down with the rig provided with the drill than it would be to employ a special rig of any other type.

128. Drilling Pit.—Where it is desired to drill fan holes, that is, several downwardly inclined holes from the same point, it may be well to sink a small prospecting shaft or pit and locate the drilling-machine on the bed-rock.

129. The advantages of this method are:

1. No stand-pipes are required for the several holes.

2. Flatter holes can be drilled than would be the case were the drill placed on the surface. This applies to cases where the drift material is quite 20 feet thick or more.

3. There is no delay between the drilling of the successive holes; that is, after one hole is drilled there is no delay waiting for the next stand-pipe to be driven.

130. The disadvantages are:

1. Even if the shaft or pit were dry, a pump will be required to remove the water from the pit, because the drill water is present if the pit itself is dry.

2. When operating at the bottom of a pit, there is not sufficient space for the quick and economical handling of the drill-rods.

3. If the drill is driven by steam, the boiler will of necessity be placed on the surface, which necessitates the carrying of the steam a long distance before it is used in the engines.

131. Drilling.—After the stand-pipe is put down, drilling is commenced and continued night and day until the work is finished. During the sinking of the stand-pipe, the entire force of drill men work together, in the day shift only. After drilling commences, the work is carried on in two shifts of twelve hours each. If the hole is comparatively shallow, not over 700 feet, and the formation not extra hard, four men comprise the drilling crew, the head driller acting as foreman during the daytime and setting

bits while the machine is running. He has an assistant who acts as fireman. At night the assistant foreman runs the drill with the aid of his fireman.

While changing the rods, one of the men goes on top of the shanty, or up into the derrick, the other remaining at the collar of the hole, the rods being handled by means of a small drum connected with the drill.

In case the hole is deep or the material very difficult to drill through, five men comprise the drilling crew, there being two foremen, two firemen, and a chief driller. In this case the chief driller sets the bits and has general oversight of the work. One of the foremen and his fireman operate the drill at night, and the other two during the daytime.

Many large mining companies who have a number of drills in operation all the time keep a man employed to set the bits for all the drills, in which case each drilling crew is comprised of four men.

132. Casing.—The stand-pipe is usually made considerably larger than the drill-rods, so that if it is desired to use a casing in the hole, it can be put down through the inside of the stand-pipe without interfering with the latter, and in many cases after the stand-pipe has been put down to bed-rock a casing is drilled into the rock to make a water-tight joint. The advantage of this method is that the drill-rods fit the casing more closely than they would the stand-pipe, and hence the hole will be started more accurately; that is, the tendency to drift on the start would be reduced.

After the hole has passed through a portion of the rock, it may encounter loose material, such as quicksand, gravel, or broken rock. To keep such material out of the hole while the work is in progress requires that the casing be continued through the troublesome formation. To accomplish this, any casing already in the hole is usually pulled up and a reamer introduced, which enlarges the hole down to and through the bad ground. The casing is then introduced and keeps the hole free from the troublesome material,

while the work proceeds as before. In some cases, in order to avoid reaming, a smaller casing is introduced inside of the diamond-drill hole, the work from this point on being continued with a smaller bit than that with which the first portion of the hole was drilled. At other times expanding bits are used to cut the rock away from underneath the casing, and thus allow it to follow the bit down. These expanding bits, when used for reaming, produce no core.

133. Guides for the Driller.—The guides by which the driller judges the progress of the work and the condition of the bottom of the hole are as follows:

1. Changes in speed of the machine.
2. Changes in the flow of the wash water.
3. Differences in pressure, as shown by the pressure-gauge attached to the feed mechanism or thrust indicator.

134. Changes in the Speed of the Machine.—In case the machine increases in speed, it is a sign that one of two things has occurred: either the bit has cut into a softer formation, thus reducing the work and allowing the machine to speed up, or the drill-rods have twisted off, removing the work of turning the bit. In case the latter has occurred, the flow of wash water will be very much increased, and the pump will have a tendency to race.

In case the machine slows down, the drill has either cut into a harder formation, thus throwing more work upon the bit and the engines, or the core has blocked or wedged in the core-barrel and is being ground to powder, in place of feeding up into the barrel as it should. The driller's experience will usually tell him which of the above has occurred. In case the core has wedged in the core-barrel, it may cut off the flow of the wash water, thus causing the pump to labor. At times this wedging or blocking of the core may free itself in a few moments and the work continue as usual, while in other cases it is necessary to pull up at once and inspect the condition of the bit and core-barrel. If the driller's experience has shown him that the bit should drill

a certain distance in ordinary formation before it becomes dull, and this slowing down comes after it has drilled but a small fraction of that distance, it is very good evidence that the core-barrel has become blocked.

135. Lost Water.—When the diamond-drill hole passes through loose and broken formations, the wash water may escape into the rock, in place of returning to the surface. This is not a desirable state of affairs, as it deprives the driller of one of his guides as to the action of the bit. Many devices have been resorted to to force the water to come to the surface, such as sending down bran, sawdust, cement, etc., in the hope that they would wash into the openings in the rock and close them, thus forcing the water to come to the surface. Casing the hole through the troublesome formation will bring the water to the surface.

136. Side Friction.—At times, gravel, sand, or bits of rock from the formation passed through get into the hole and block the rods. If, upon lowering the rods into the hole while they are still suspended (that is, with the bit off the bottom), they rotate with difficulty and in a jerky manner, it is evident that such obstructions are present, and they must be removed either by casing the hole through the troublesome formation or by flushing out the portion then in the hole and seeing if any more accumulate. At times this side friction is caused by the sliding of loose or shaly rock against the rods, and under such circumstances the hole will require casing.

137. Washings.—The washings brought up by the water are not all derived from the cuttings of the bit, but while passing through soft formations the rods always wear more or less material from the sides of the hole. Any change in the character of the wash must be noted by the driller, as these changes indicate changes in the rock formation that the drill is passing through.

Sometimes tests are made to see how long it takes the water to pass down the rods and return as wash. This may be

accomplished by passing foreign substances, such as drops of candle-grease or coloring matter, through the water.

When drilling through iron ore or similar substances, the wash material is collected in boxes provided for the purpose and analyzed from time to time to see how it compares with the analysis made from the core.

138. When drilling through hematite or limonite, if it is desired to make a determination for iron from the diamond-drill core or from the material brought up by the wash, it is necessary to first remove all the iron worn from the bit and the rods during the process of drilling. This may be accomplished by the aid of a magnet. If this precaution is not taken, the analysis of a diamond-drill core may show more iron than any known iron ore could possibly contain.

It has been stated that the analysis of the wash from the Lake Superior hematite drillings is usually higher in iron and lower in phosphorus than the ore actually passed through, the presumption being that the light quartzite in the ore has been washed away as tailings from the settling boxes, together with a portion of the phosphorus.

In diamond drilling for precious metals, it is of great importance to catch the sludge or wash, as by this means the presence of valuable material which has been ground up in the core and washed out may be discovered.

139. Parting of the Rods.—The parting of the drill-rods may occur from several causes, among which may be mentioned :

1. The breaking or twisting off of the rods themselves.
2. The stripping of the thread in a coupling, either while the drill is in operation or during the raising or lowering of the rods.
3. The unscrewing of a coupling. This usually occurs while the rods are being raised or lowered.
4. The giving way or breaking of the safety jack which holds the rods at the surface during the process of raising or lowering, at such times as the hoist gear is uncoupled from them.

140. If the rods drop when they part, the diamonds are liable to be broken, or smashed, as the driller usually expresses it.

The lower portion of the diamond-drill hole usually contains more or less mud, and if lost rods are allowed to remain standing in this mud, it frequently sets like a cement, thus rendering it almost impossible to recover the embedded rods.

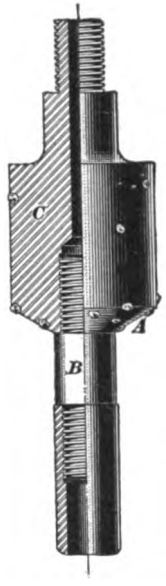

FIG. 84.

141. Fig. 84 illustrates a reaming bit. It has a bevel face *A*, on which the diamonds are set. A few stones are also set around the periphery of the portion *C*, in order to maintain the diameter of the portion of the hole being reamed. A coupling which screws into the lower end of the bit is shown at *B*, and onto this one length of drill-rods is screwed. The drill-rods act as a guide and keep the reaming bit in line with the hole previously bored. The reason that the guide is not made in one piece with the reaming bit is that the drill-rod used as a guide wears more or less, and hence requires renewing before the bit has to be removed, and by the method shown any drill-rod will renew the worn one. The upper end of the bit is so formed as to screw into the drill-rods above in place of the coupling.

142. Figs. 85 and 86 illustrate two styles of fishing taps. In Fig. 85 the thread on the tap is tapered throughout its entire length and the flutes extend to the shoulder. The hole through which the water passes extends straight down to the point of the tap. The end of the tap has teeth cut in it like a rose-bit. This tap is very useful where the weight of the parts to be removed are not too great, but being tapered throughout its entire length it has a tendency to spread the piece into which it is screwed and hence to pull out rather than to lift the lost rods.

Fig. 86 illustrates a tap constructed on a slightly different principle. In this case the point of the tap is formed like a drill and point reamer, and is intended for cutting its way into or through the jammed end of the rods. The hole for the water stops an inch or so from the tap, and from this point small holes are drilled from the flutes or between the teeth at the end of the tap into the main supply passage. Thus the water or other lubricant used during the fishing is furnished to the cutting edges as required. The portion *B* of the tap is tapered, while the portion *A* is straight. The result is that when a tap is secured nearly up to the shoulder it will form threads on the rods for a distance equal to the straight portion *A*, and hence the tap is not as liable to pull out as if it were tapered throughout its entire length.

FIG. 85.

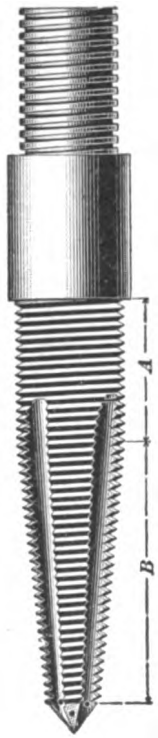

FIG. 86.

When fishing for rods, the fishing-tackle is best adapted for screwing into a coupling, on account of the fact that the metal of the coupling is thicker than the metal of the tubes, and while the tap might screw a sufficiently firm hold in the coupling, it would be liable to pull out from the tubes. On this account it is sometimes necessary to send down special tools and cut off all the tube above the upper coupling, and then screw the tap into this coupling and draw out the lost rods. At times fishing dies are used, which are screwed over the outside of a coupling, thus enabling it to be drawn from the hole.

143. Figs. 87, 88, 89, and 90 illustrate a method sometimes employed to recover a lost bit. It will be seen that

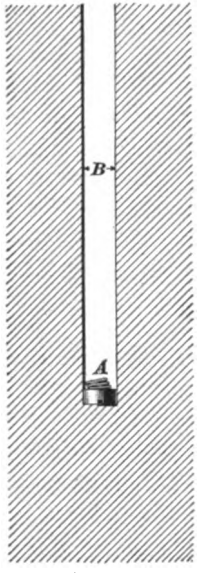

FIG. 87.

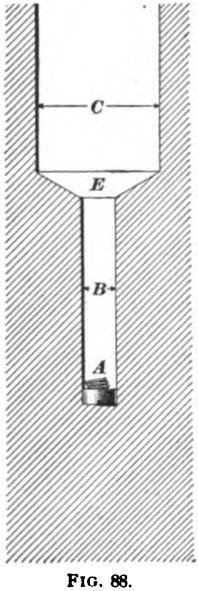

FIG. 88.

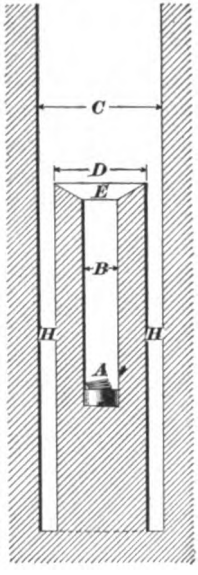

FIG. 89.

the upper end of the bit *A* has become so jammed to one side that it is impossible for a fishing tap to catch hold of it. In such a case as this, it would be necessary either to abandon the hole or to drill down around the bit. Fig. 87 shows the original hole of the diameter *B* with the bit *A* at its bottom. Fig. 88 shows the hole after it had been reamed to the size *C* down to the point *E*. After the hole has been reamed to the point *E*, a casing bit is introduced and the annular space *H H* shown in Fig. 89 drilled down about the old hole. The core shown in Fig. 90 is then drawn up in the ordinary manner. It will be seen that this core contains the lower end of the old hole, with the lost bit at the bottom.

FIG. 90.

After the lost bit has been recovered, the hole can be

continued, though it will be necessary to use a larger bit or to start a small bit by using some device to keep the rods central in the hole. If this precaution is not taken, the hole may run out rapidly from this point.

144. If the rods have simply become unscrewed, it may be possible, by a little careful work, to screw them together once more and draw them out without the use of any special tools. In cases where the rods have become broken or a thread has been stripped, it will be necessary to use one of the special tools or devices known as fishing taps, fishing dies, etc. These are screwed into or over the end of the lost rods or core-barrel, after which they may be drawn out.

145. Sometimes lost rods may be recovered by using a block of dry, hard wood in place of a fishing tap. The wood *A*, Fig. 91, is screwed into the end of a rod *B*. The rod is then lowered down the hole and the wood driven into the upper end of the lost rods, as shown in Fig. 92. After the wood *B* has been driven into the rod *C*, water is poured down through the rod *A* and the plug allowed to swell. By this means the two rods are firmly united and may be drawn out together. This method is very useful in recovering core-barrels, bits, or short pieces of rods. It has the advantage that no turning of the rod *A* is necessary in making the coupling, for it is sometimes the case that the bit or core-barrel may rotate with the fishing tap, thus rendering it impossible for the tap to obtain a sufficient hold on the lost piece to bring it out.

FIG. 91.

FIG. 92.

At times a diamond-drill hole contains so much water that the plug would become swelled long before it could be

driven into the lost rods. In such a case, the portion of the wood projecting from the rod can be given a coat of paint. After the wood has been driven into the rod and painted, water is poured into the rod. This acts upon the unpainted end grain of the wood as exposed in the tube, and the block will swell and connect the rods as desired.

When the lost rods become firmly wedged in the hole, it may be necessary to unscrew them by means of a left-hand fishing tap. When left-hand taps are used, it will be necessary to pin all the joints of the rods used to operate them, unless these rods are also provided with left-hand threads.

146. Lost Diamonds.—It frequently happens that diamonds become wrenched from their setting and remain in the hole after the rods are withdrawn. It would be unsafe to continue drilling until these lost stones were removed from the hole, for they would probably wrench other diamonds from the bit and cause a great amount of damage; hence the bottom of the hole must be cleaned out and the diamonds recovered by means of a mass of soap or wax fastened into the end of the rods, which are then let down the hole. The diamonds, together with any other small pieces of rock on the bottom, adhere to this mass and can be drawn out. At times there is a stump core left in the hole, and consequently the above method becomes impracticable. In such a case it may be necessary to use a percussive bit and chop up the stump of the core and the diamonds, after which they are washed out by a current of water, or they may be recovered, as before stated, by means of soap or wax.

147. Method of Setting the Diamonds in the Bit.—The tools used in setting diamonds are small chisels and small punches, and the diamond-setter's kit consists of from 8 to 12 of these tools, together with a light hammer and one or two small drills. The smallest chisels are not over $\frac{1}{16}$ of an inch in width on the cutting edge, and the largest flat chisel is rarely over $\frac{3}{8}$ of an inch in width on the cutting edge.

The material of which the bit blanks are made is a soft steel, which can be calked around the diamonds so as to form a perfect setting.

The setter first examines the diamonds and determines the best cutting edge and position for each individual carbon. The size and character of the stone also largely determines the number required in a bit. After having decided upon the number of stones, he takes a center-punch and marks the locations in which he intends to place the various stones. Holes are then drilled in the location where it is intended to set the carbons. These holes are enlarged with the chisels and their lower portion shaped so that they will receive the stone and form a good bed for it. Pieces of copper are sometimes forced under or behind the carbons as a bed against which to calk them, but the best settings are made when the steel itself is carefully formed for the bed. After the stone is in place, the steel surrounding the hole is calked down against the stone so as to make a perfect setting, and usually one or two grooves are filed across the face on the bit in order to provide passages for the water.

Each stone should have a good bearing, and be so set that it is not liable to be torn out of the bit by any sudden jerk which it may receive from a loose piece of rock. Great care should be taken to see that one or two stones do not have to do the greater part of the work. It is better to have each stone cut only a certain portion of the face or side of the hole, for if the stone is so set that it has to cut on two faces, there is great danger that it may be wrenched from its setting. It is a good plan to set one or two stones on the sides of the bit as clearance stones, and in case the diameter of the bit becomes somewhat reduced, without materially reducing the cutting ability of the face carbons, it is possible to reset these clearance stones and so save the entire resetting of the bit. Clearance stones are usually smaller carbons than those used in the face of the bit. Sometimes carbons are set in a special bushing placed above the core-lifter, so as to slightly enlarge the hole and to form an

additional guide for the bit. The setting of carbons in reaming bits or solid bits is accomplished in a manner similar to that just described.

148. Records.—In diamond drilling it is very important that accurate records concerning the drilling be kept. In average drill work it is difficult to obtain a core the total length of which will be more than 90 per cent. of the distance drilled. At the same time there ought to be no trouble in determining the thickness of any seam to within a fraction of an inch, providing the seam does not exceed a thickness of 5 feet. The drill runner should always keep a rule at hand, and at every change in the drilling which would indicate the passage of the bit from harder to softer material, or vice versa, he should make a measurement and note the depth in his note-book; these measurements are to be compared with the core.

The chief driller should keep a very careful note-book or log, recording in it all these measurements and points of interest in regard to the core. The supposed or known drift of the drill hole should be recorded by the engineer in charge of the surveying. The core should be saved and arranged in its proper order. For this purpose, boxes or trays, provided with parallel grooves to receive the core, should be provided. These grooves may be made by simply nailing thin strips of wood in the bottom of the boxes or trays in such a manner as to form narrow divisions for the reception of the core.

When passing through thick formations of barren material, it is not necessary to save all of the core, only samples from time to time being put into the collection. The depth at which the core was obtained should be recorded by labels upon the core itself and by blocks inserted in the boxes occasionally on which the depths have been recorded.

149. Accuracy Against Speed.—In the case of shallow holes drilled to determine the thickness of a known formation, such as a deposit of iron ore, salt, or gypsum, it may be policy to push the work rapidly, as small discrepancies,

caused either by drift or by the loss of portions of the core, are not of much importance, but in the case of deep holes or when drilling for more valuable material, it is of the greatest importance that the record give an accurate account of the formation passed through; for this reason, it may be necessary to spend a great deal of time on the drilling.

When the drill runner sees by his pressure-gauge or by the behavior of the machine that he has cut into a formation either harder or softer, it may be best to pull up the rods at once and investigate the condition of both the core and bit before proceeding into a new formation. This is of especial importance when prospecting for the precious metals.

It is of great importance that the bit be resting on the bottom of the hole when drilling is commenced, for if this is not the case, either time will be wasted while the machine is feeding the rods forwards to reach the bottom of the hole or the rods may be dropped and the diamonds smashed. It is also important that the bit be carefully brought to the bottom of the hole, for if it were dropped there would be great danger of smashing the diamonds.

When drilling deep holes, that is, holes over 700 feet, it is necessary that every portion of the apparatus be in perfect repair, and that the men in charge of the work use their utmost skill and caution in each operation. If the men are not extremely careful, they are liable to cause accidents, which would retard the work, if not causing the loss of the hole. No one without considerable experience should attempt to drill a deep hole with a diamond drill.

There is no class of work in which the old adage, "The more hurry the less speed," applies more fully than to diamond drilling, for when the men get in a hurry they are liable to drop rods, lose diamonds, let the hole run out of true, and do a number of similar things, all of which will result in a greater or less delay in the work.

150. Size of the Hole.—As a general rule, it is best to use the smallest bit that can be conveniently handled, for a small bit means less cutting, less expense for diamonds,

and greater speed in the work. For holes from 500 to 600 feet deep, bits of from $1\frac{5}{8}$ inches to $1\frac{1}{2}$ inches outside diameter are used. These will take out a core of from $1\frac{5}{16}$ inch to 1 inch diameter. When prospecting for precious metals or for mineral which occurs disseminated through the rock formation (as some zinc and lead deposits), it is best to use a somewhat larger bit. This is also the case in prospecting for coal, where a small core would break off and grind up, on account of its not being strong enough to resist the action of the bit cutting about it.

151. The Influence of the Angle of the Hole.—Vertical holes give very much less trouble than those which are started at an angle; for in the case of a vertical hole, the rods do not lie upon the bottom of the hole, and hence the drilling-machine does not have to overcome this great friction in addition to the work of driving the bit. It is much easier to keep a vertical hole straight than a horizontal or an inclined hole, for the wear upon the core-barrel and rods is very much less, and, as a consequence, it is easier to guide the bit than in the case of an inclined hole, for the rods immediately back of the bit can more easily be kept the full size. It is much easier to handle and change the rods in the case of a vertical hole than when drilling at an angle.

152. Drilling from Underground with a Diamond Drill.—A diamond drill is frequently used for drilling from the workings of a mine. This is commonly called underground diamond drilling to distinguish it from drilling done from the surface, which is called surface drilling. In the case of underground drilling, the following points may be noted:

1. Not only vertical and downwardly inclined holes can be drilled, but horizontal and upwardly inclined holes are also drilled.

2. The drill is rarely driven by steam, compressed air or electricity being used.

3. The water used for drilling purposes is often furnished

from the water column of the mine, thus doing away with the necessity of a pump.

4. No derrick is required to hoist the drill-rods, the tackle being simply attached to the mine timbers or the roof.

5. No shanty or shelter is required for the men and the machinery.

6. No stand-pipe is required, as there is no drift material to be passed through. At times, underground holes require casing.

7. When drilling holes from the deep levels of a mine, it is not uncommon to encounter water under great pressure. Sometimes this water will force the drill-rods from the hole and the machinery itself may require bracing. Under such circumstances the rods come out of themselves in place of being hoisted out, but they have to be forced in by means of jack-screws or with the aid of the hoisting rope.

8. Aside from the points already noted, underground drilling does not differ materially from surface drilling.

153. Rate of Drilling.—The rate of drilling varies greatly, depending upon the depth of the hole, the character of the rock, and the size and power of the drill being used. Hand drills usually average between 10 and 30 feet per shift of 10 hours, including the time occupied in taking up rods, changing core-barrels, etc., but not counting the time required to move the machine. It is rare that small drills used for prospecting to a depth of 700 feet about mines succeed in drilling more than an average of 8 feet per shift throughout the year, and yet some phenomenal records have been made for a short time—such, for instance, as the taking out of over 60 feet of core in 24 hours, or the boring at the rate of 30 to 40 feet an hour for a short time in comparatively soft material. This rapid boring is not always advisable, for reasons already stated.

154. Cost of Drilling.—Several tables are here given to show the cost of drilling with a diamond drill in various formations, and it will be seen that these costs vary from less than one dollar to over five dollars per foot.

RECORDS OF COST PER FOOT IN DIAMOND DRILLING.

	A	B	C	D	E	F	G	H	I	J	K	L	M	N	O
Labor	.707	1.040	2.483	1.150	.581	1.615	1.030	1.720	1.189	1.284	.721	1.200	.939	.812	.984
Fuel	.094	.270	.256	.019	.000	.216	.090	.214	.157	.339	.419	.329	.126	.182	.251
Camp acct	.373	.559	.789	.538	.295	.621	.384	.549	.516	.495	.519	.595	.644	.722	.636
Repairs	.139	.110	.294	.171	.135	.144	.103	.185	.154	.165	.040	.087	.138	.126	.116
Supplies	.034	.065	.039	.074	.023	.032	.011	.039	.048	.097	.020	.092	.076	.097	.088
Carbon	.263	.658	.859	.860	.843	1.587	.934	.684	.684	.733	.227	.209	.553	.239	.330
Supt	.239	.322	.628	.040	.063	.192	.140	.305	.259	.172	.347	.220	.106	.196	.199
Total	1.849	3.024	5.348	2.852	1.940	4.407	2.692	3.696	3.007	3.285	2.293	2.732	2.582	2.374	2.604

A 5 holes, 1,066 ft.
Sandstone and marble.

B 1 hole, 1,293 ft.
Black slate and jasper.

C 3 holes, 478 ft.
Jasper, very hard.

D 5 holes, 780 ft.
Jasper, hard.

E 1 hole, 216 ft.
Iron slates.

F 1 hole, 174 ft.
Jasper and slate.

G 2 holes, 267 ft.
Jasper and slate.

H 3 holes, 410 ft.
Jasper.

I Average cost of total work of drilling 21 holes. Total of 4,684 ft.

J 2 holes, 634 ft.
Iron slates.

K 2 holes, 360 ft.
Schist and jasper.

L 6 holes, 1,350 ft.
Iron slates.

M 2 holes, 611 ft.
Schist, jasper, and quartzite.

N 6 holes, 2,091 ft.
Quartzite.

O Average cost of drilling 18 holes, 5,046 ft.

155. The cost of drilling 2,084 feet of hole in prospecting the ground through which the Croton Aqueduct Tunnel was to pass is given as follows:

814 ft. of soft rock (decomposed gneiss), in which an average of 23.1 ft. per day was drilled, at a cost of $1.15 per ft.

347 ft. of hard rock (gneiss), in which an average of 11.1 ft. per day was drilled, at a cost of $3.97 per ft.

923 ft. of clay, gravel, and boulders, in which from 6½ to 9 ft. per day were drilled, at a cost of $4.07 per ft.

The average progress per day in drilling the entire 2,084 ft. was 10.2 ft. per day.

156. In the Minnesota Iron Co.'s mines at Soudan, Minnesota, the diamond drill is used for drilling holes from 10 to 40 feet in depth in the back of the stopes, practically all the work being done in iron ore. The average cost per foot of drilling 13,512 feet of hole was $.7703, which was divided as follows:

Carbons	$.3400
Supplies, oil, etc	.0700
Fuel	.0400
Repairs	.0500
Labor	.2703
Total	$.7703

157. The following tables give the cost of boring at two Michigan mines:

TABLE I.

ISHPEMING, MICHIGAN.

					Total cost.	Cost per ft.
Labor	400¼	days setter at	$3.00	$1200.75	$2,506.10	$.669
	372	" runner "	2.25	837.00		
	230½	" " "	2.00	460.50		
	4½	" laborer "	1.75	7.85		
Carbon, 68⅜ carats, at $15.144					$1,035.47	.276
Bits, lifters, shells, barrels, and repairs					433.81	.115
Oil, candles, waste, and supplies					128.09	.035
Estimated cost compressed air					374.60	.100
Total					$4,478.07	$1.195

Number holes drilled	28
Drilled in hematite	193 feet.
" " jasper	646 "
" " mixed ore	986 "
" " dioritic schist	1,921 "
Total drilling	3,746 feet.
No. of 10-hour shifts drill was running, including moving and setting up	603
Amount drilling per 10-hour shift	6.2 feet.

TABLE II.

Underground drilling	6,075 feet.
Surface drilling	1,414 "
Stand-pipe sunk	470 "
Total distance run	7,959 feet.
Actual drilling time underground	672 shifts.
" " " on surface	165 "
Time of foreman, setter, moving, and stand-piping	1,314 "
Total time worked	2,151 shifts.
Av. progress per man per shift	3.70 feet.
" " " drill " " actually running	8.95 "
Weight of carbon consumed	111 carats.
Dist. drilled per carat of carbon consumed	67.38 feet.

	Amount.	Per foot.
Cost of carbon	$1,887.00	$.237
" " supplies and oils	134.13	.017
" " fuel	360.73	.045
" " shop material, etc	663.36	.083
Pay roll	4,000.03	.502
Total cost	$7,045.25	$.884

SPECIAL METHODS AND DEVICES FOR DIAMOND DRILLING IN SOFT OR SOLUBLE MATERIALS.

158. This may be divided into two parts:

1. Methods using the ordinary drilling outfit.
2. Methods requiring special tools or fixtures.

METHODS USING THE ORDINARY DRILLING OUTFIT.

159. This may be treated under two heads:

1. Methods adapted to soluble materials.
2. Methods adapted to soft materials.

160. Methods Adapted to Soluble Materials.—When drilling through soluble materials, such as salt formations, with a diamond drill, the core would be entirely or partially dissolved by the wash water if the ordinary methods were followed. This solution of the core may be partially or entirely prevented by using a saturated solution of the material through which the drill is passing, in place of pure water for a drilling solution.

161. Methods Adapted to Soft Materials.—Some ores are so soft that it would be impossible to obtain a complete core while using wash water, as the soft portions would be ground up and washed away, leaving only the harder material in the core-barrel. The soft portions are often the most valuable part of the ore, and hence it becomes necessary to obtain samples for analysis. This may be accomplished by running the drill dry, continuing the work until the bit blocks or shows signs of blocking, when the rods are immediately drawn together with the plug or core of ore which has forced its way into the core-barrel. It is sometimes necessary to plug the upper end of the core-barrel with a piece of wood to keep the water which accumulates in the rods from forcing the plug or core of ore out of the core-barrel and bit while the rods are being drawn from the hole.

When the drill runner encounters a body of soft ore, such as hematite iron ore, this method of drilling may be continued while passing through the ore-body, or part of the distance may be drilled in the ordinary manner, depending on any fragments of core that may remain in the core-barrel, the wash, and the behavior of the drill to indicate the character of the deposit passed through. It is only the soft ores of iron that give this trouble in drilling, for the hard hematites and magnetites furnish good cores. By this method of dry drilling, sample cores may be obtained from any soft material which partakes of the nature of clay.

METHODS REQUIRING SPECIAL TOOLS OR FIXTURES.

162. As this class of work is usually done by experts who take contracts for prospecting and who use special devices, which in most cases are patented, only a general description need be given.

The diamond bit can be depended upon to bore through any material, no matter how hard or soft, and for this reason it has been found to furnish a most perfect core.

The cores of soft materials, such as bituminous coal, sulphur, etc., would break up and be washed away if the water passed down through the core-barrel in contact with the core; also, owing to the soft nature of the material, the ordinary styles of core-lifters can not be used. To overcome these difficulties special core-barrels have been invented, which protect the core from the flow of the wash water.

163. There are two general styles of special core-barrels:

1. Those which rotate with the drill-rods and are in reality only double core-barrels, the wash water passing down through an annular space between the core-barrel proper and the outer tube which drives the bit.

2. Non-rotating internal core-barrels. These may be attached to a separate set of rods passing through the center of the drill-rods proper, but not rotating with them. When

this style of core-barrel is used, the core simply feeds up into the core-barrel as the bit does the cutting.

164. Non-rotating internal core-barrels may be so constructed that it is necessary to draw the entire set of rods to obtain the core, or they may be so arranged that the core-barrel can be drawn separately, through the center of the drill-rods, without disturbing the bit.

Rotating internal core-barrels may be so arranged that they can be drawn from the inside of the rods without disturbing the bit, but when so arranged they are generally drawn by means of a wire rope and a go-devil.

165. Special Core-Lifters. — Special core-barrels may be provided either with the standard core-lifters or with specially designed core-lifters.

166. Special core-lifters may be divided into two classes:

1. Those which depend upon the mechanical action of hoisting the rods or core-barrel to close the core-lifter upon the core.

2. Those in which the core-lifter is closed by means of water pressure or some device aside from the act of hoisting the core-barrel. The advantage of this style of core-lifter is that it can be made to grip the core before the bit or core-barrel is disturbed by hoisting, and so insure the securing of the entire core down to a point very close to the bottom of the hole.

167. In drilling through soluble material with a special or double core-barrel, it may be necessary to use a solution of the material being passed through, even though the wash water does not come in contact with the core in the core-barrel; for if ordinary wash water were allowed to flow up through the drill hole it would dissolve material from the sides of the hole, which might in time cause a great deal of trouble in case it should be necessary to fish for any lost rods. Then again, this increase in the size of the hole will probably increase the tendency to drift.

168. Other Special Devices for Obtaining Samples From Soft Material.—Under this head may be considered such tools as pod-bits, trap-bits, and auger-bits. These are all special forms of boring tools which can be attached in place of the ordinary diamond bit, and which are used in obtaining samples of any soft material at the bottom of a diamond-drill hole. The trap-bit may be of the auger-bit or pod-bit type, but it is provided with a trap-door at the lower end through which the excavated material can pass while the bit is in action. The moment the bit ceases to be fed forwards, the trap-door closes and secures any material then in the bit. These bits are necessary where water would wash the sample obtained by boring with any other style of bit.

A FEW SPECIAL ADVANTAGES POSSESSED BY THE DIAMOND DRILL.

169. Diamond drilling is not interfered with by water in the formation, while if the prospecting is carried on by shaft-sinking, the removal of the water may become an extremely expensive item, if not rendering it impossible to proceed with the sinking.

A given formation can be penetrated much quicker with a diamond drill than by sinking a shaft.

The cost per foot is much less in the case of drilling than in the case of shaft-sinking; hence, with a given amount of money, more strata can be penetrated with a diamond drill than by the sinking of a shaft.

When a prospecting shaft is abandoned for a short time, it fills with water, which has to be removed before the sinking can be continued, while if a diamond-drill hole is left idle and the stand-pipe or casing undisturbed, there is no expense for removing the water from the hole before drilling can be resumed.

If work in a prospecting shaft is stopped for a holiday or over Sunday, there is always a stand-by loss for pumping,

which is avoided in the case of a diamond-drill hole on account of the fact that water in the hole does not interfere with the drilling.

THE DAVIS CALYX DRILL.

170. In many respects the Davis calyx drill resembles the diamond drill. It requires drive tubes through which a current of water is kept flowing and has a bit which cuts out an annular space, leaving a core. There is an essential difference between these drills with regard to the cutting action of the bits, for the diamond bit cuts gradually and turns with a constant speed, while the Davis calyx bit may actually stop for a time and then turn with great rapidity.

171. Fig. 93 shows the bit of a Davis calyx drill. It is simply a steel tube having teeth on one end and a thread on the other by which it is connected to the drive tubes. The rear of each tooth is beveled to an angle of about 60 degrees to the horizontal, and the front is nearly vertical. In order to provide a clearance for the calyx tube and a passage for the water on either side of it, the teeth are alternately set in and out just in the same manner that the teeth on a rip-saw are set. The cylinder from which the bit is made is of the best steel and is about $\frac{3}{16}$ of an inch thick and 10 or 12 inches long, so that it will have sufficient material to stand repeated sharpening.

FIG. 93.

172. The action of the calyx bit is peculiar and strikingly effective. The teeth, being weighted down with the bore tubes, take a comparatively deep hold on the bottom of the hole, which prevents the bit from being turned until the torsional stress in the tubes is sufficient to overcome the resistance of the rock and start the bit rotating. When this takes place, the bit turns with lightning rapidity until

the potential energy stored up in the rods or tubes has been expended, when it stops and takes another deep hold on the bottom of the hole. Large pieces are in the meantime hurled from the bottom of the hole, and finally ground into particles just small enough to pass between the tube and the side of the hole. It is evident, from the construction and action of this bit, that while successful in comparatively soft rock, it is unsuited for boring in very hard strata.

173. Fig. 94 shows a Davis calyx drill in a hole. The calyx tube is fastened near its middle to the bore tubes by means of a key and plug *C*. The top portion *D* of this tube forms a receptacle for the large particles from the bottom of the hole, and the lower portion *B*, to which the bit *A* is attached, forms a core-barrel. A peculiar feature about this drill is that it does not force the large particles of debris to the surface, but deposits them in the receptacle as shown at *E*, while the fine particles are carried to the surface. This separation is due to the fact that the high velocity which the water has in passing up between the calyx tube and the side of the hole is suddenly diminished at the top of the calyx tube on account of the increased section of its passage

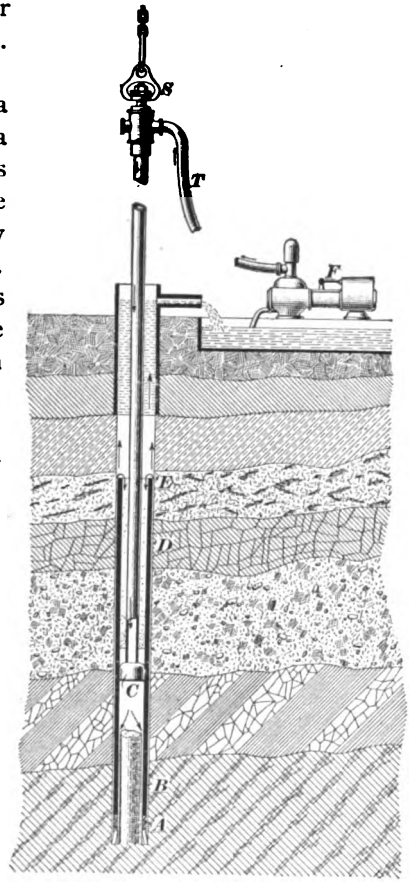

FIG. 94.

along the bore tube. When the core is removed, the coarser material is dumped from the receptacle. The weight upon the bit is regulated, and the tubes are suspended by a tackle attached to them by the swivel *S*. The pump *F* forces water into the bore tubes through the flexible tube *T*, and the entire cycle of the water is indicated by the arrows.

When the core is to be removed, a few small, hard stones are dropped down the bore tubes; these tightly wedge themselves between the core and calyx tube, and whenever the latter is raised, the core is broken off near the bottom and raised to the surface.

On account of the peculiar action of the Davis calyx drill, the rate of advance is remarkable, frequently being 75 feet per day, counting time required for changing bits and removing cores. In case very hard rock is met, a diamond bit can be used and rotated at a constant speed. The rate of turning is only about 12 revolutions per minute.

COMPRESSED-AIR COAL-CUTTING MACHINERY.

COMPRESSED-AIR COAL-CUTTING MACHINES.

1. The most expensive and difficult operation in the production of coal is, in general, the process of loosening it from its solid state. This is accomplished in three ways: (1) By blasting it from the solid, as is done in most of the mines in the anthracite regions and in many bituminous mines. (2) By undercutting and blasting down, or letting the weight of the roof break the coal; this process is followed in a large proportion of the bituminous mines which are worked on the room-and-pillar system and in all mines that are worked on the longwall principle. (3) By shearing either in the center or on one rib and shooting to the shearing; this method is used in many bituminous mines where there is a strong roof and where the run-of-mine basis is used. There is, of course, some intermixing of the above methods, as in some mines they both undercut and shear in order to protect a tender roof and get a large proportion of lump coal; for when the coal is both undercut and sheared on one rib, it can be brought down from the solid with a very light charge of powder. In some cases no powder at all is used and the coal is simply wedged down after being undercut and sheared.

2. Many machines have been constructed to undercut and shear coal, and they are now so perfected to meet the various requirements found in the different fields that it

may safely be said that coal-cutting machines will in the future do the greater proportion of the undercutting and shearing. The most successful of these machines may be divided into two classes: (1) Those which act percussively and cut with a single large chisel, very much like percussive rock-drills. (2) Those which cut with a series of steel teeth which successively scrape off steps of coal. This latter class may be subdivided into four classes: (1) Those which have a series of steel teeth mounted on an endless chain, which is moved in one direction so as to cause the teeth to cut the coal continuously. (2) Those which have the teeth set in a rotating bar, which advances parallel to itself as the teeth cut the coal. (3) Those which have the teeth set in the periphery of a wheel, which rotates and advances as the cutting progresses. (4) Those which cut out a large cylinder of coal and which are used almost exclusively for driving headings.

3. Machines for mining operations have been constructed to be operated by two great powers: (1) compressed air; (2) electricity. The former class is the only one that will be treated in this Paper.

COMPRESSED-AIR POWER.

4. Compressed air improves the ventilation of a mine to a limited extent, and in cases where work is being done in advance of the air-current, it is sometimes depended upon exclusively to ventilate the workings. In mines where gas is encountered, compressed air is entirely safe, because in its use there is no sparking, as there is in the use of electrical power. Therefore, in this class of mines, compressed air is frequently used; it will undoubtedly be used almost exclusively in the future, owing to the danger of igniting the gas where electricity is employed.

5. Compressed air is furnished by a compressor, which is situated, if possible, at some central point, and the air is

carried from the compressor to the different working faces throughout the mine by means of standard wrought-iron pipes. The machines are connected to the pipe system by means of a section of rubber hose, which is usually either made extra heavy and strong or is wound with wire, so as to withstand the pressure and prevent it from injury from falling rock or when being dragged over the rough mine floor. This flexible tube gives freedom of action and obviates the necessity of making pipe-connections having flexible joints and enables the machine to be moved across the working-face of the room at the will of the operator.

6. In compressing air, its temperature is raised, and in consequence of the cooling which takes place in the pipes running through the mine, considerable energy is lost unless the air is reheated just before using, which of course is generally impracticable in mining work. However, this objection to the use of compressed air is largely overcome by cooling the air at the compressor during the process of compression, so that it will not suffer a large diminution of temperature and consequent loss when taken into the cool mine through pipes. This is accomplished by water-jacketing the air-cylinder or air-cylinders of the compressor, and in the compound type of compressors, by passing the air through an intercooler between the cylinders, which is made up of a network of pipes having cold water flowing through them. The cooling operation is also assisted by taking the air from outside of the engine room whenever practicable, so as to have the incoming air as cool as possible. This is more fully accomplished in a compound compressor having two or more cylinders with intercoolers between them than it can be in a non-compound compressor, where all the compression has to be made in one cylinder; for in the compound compressor more cooling surface is secured and more time is given in which to cool the air, since the air goes through two or three stages instead of one, as in the non-compound machine.

7. Taking a mining plant as a whole, it is more economical to use air under a high pressure than under a low pressure, because the air can be conveyed through the mine in smaller pipes, which are less expensive and can be more easily installed and repaired; and machines with smaller cylinders can be used, for the reason that air under high pressure can be used expansively to a greater degree than air under low pressure. The use of high pressure in machines, however, demands a valve action that will give a positive and sharp cut-off of the access of the air to the cylinder-ports. The loss of pressure in pounds per square inch by the flow of air through pipes varies directly as their lengths and increases about as the square of the velocity; and as the volume of air varies as the pressure, it is evident that a much greater amount of energy of compressed air is delivered to the machines at the working-faces by the use of high pressure.

8. A great advantage in the use of compressed air is that in case a machine operated by it is not working, no energy is lost, as most of the modern air-compressors are fitted with pressure regulators, which operate throttle-valves on the steam-pipe to the compressor, causing it to slow down when the machines are not in use and the pressure in the pipe-line is increased; or, *vice versa*, when there is a heavy demand by the machines, the throttle-valves in the steam-pipe are opened, giving the compressor more steam and increasing its speed.

9. There is little or no danger in the use of compressed air, as when a pipe is burst by the pressure, it simply flattens out and the escaping air does no damage, simply having a tendency to make the surrounding space cool and to freeze any moisture there may be in the surrounding air. The exhaust from the machines, to a limited extent, has the same effect on the working places, improving their ventilation and keeping them moderately cool and comfortable for the men.

PICK MACHINES.

10. The pick, or percussive, type of machines were the first power machines used to undercut and shear coal to any considerable extent, and owing to their simplicity and adaptability for working where considerable timber is required to support the roof, and where iron pyrites or other impurities are found in the coal, there can be no doubt but that the pick machine will always be used.

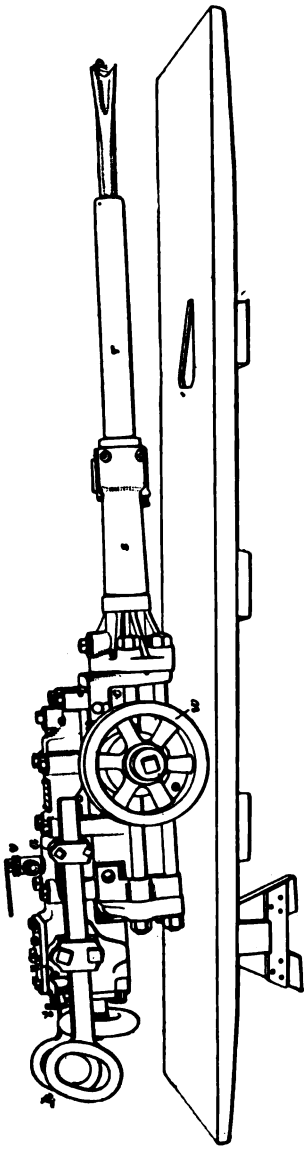

FIG. 1.

DESCRIPTION OF THE PICK MACHINE.

11. Fig. 1 shows a pick machine on an inclined platform. It consists essentially of an air chest *a*, an air-cylinder *c*, and a piston-rod *r*, all mounted on wheels *w*. Inside of the chest is a valve motor, which admits air to the cylinder at the different ends alternately, giving a reciprocal motion to the piston. The piston is made long, so that an undercut can be made the desired depth without making the front of the cut high enough for the main body of the machine to enter. The sleeve *s* is strongly bolted to the cylinder and serves as a front cylinder-head and also as a support to the piston-rod. The pick *p* fits into a tapered socket in the end of the rod,

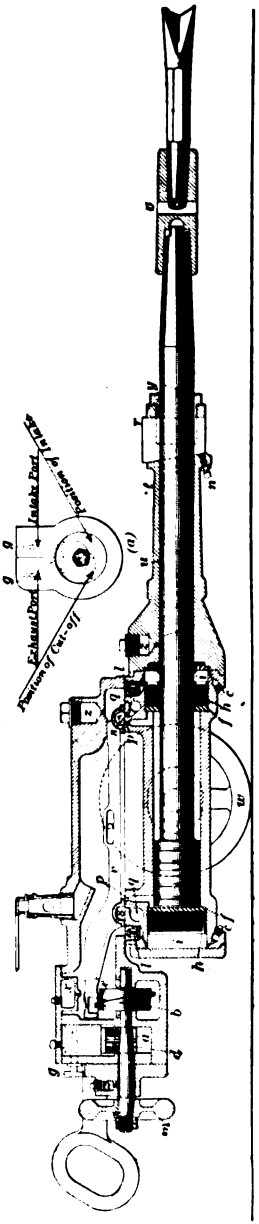

FIG. 2.

and is sharpened like a fish-tail, as this form is the least liable to glance to one side when the blow is struck. Air is admitted to the air chest through a valve *v*. The speed of the machine is governed by rotary throttle-valves *t*. The runner controls the machine by the handles *h*.

12. Fig. 2 shows a longitudinal section of this machine and illustrates the detailed mechanism. The distinctive feature of this type of machine is the valve action, which is independent of the action of the main piston feed and is worked by a small, independent, single-cam rotary *a*, a cross-section of which is shown at (*a*). The advantage of this arrangement is that in case the piston does not make a full stroke on account of the resistance offered to the bit, or in the event of the bit sticking in a crevice of the coal, the machine will not run back and forwards on the piston as much as when the valve action is controlled by the main piston; therefore, the machine is easier handled and there is less danger of the machine hurting the runner. With the independent valve action, however, the piston will not strike as heavy a blow with a fractional stroke as it will with a full one.

The small rotary engine *a* turns the shaft *d*, on which is fastened the spiral wheel *b*, which travels in a hardened-steel cup *c*, which is set into the neck of the main valve *v*. By this arrangement the valve is given the necessary travel on the valve-seats *s*.

The runner controls the rotary engine, and thereby the main valve, by the throttle-valves *g*, there being two of these valves, one governing the inlet of the air and the other the exhaust. By throttling the exhaust, a little back pressure is secured against the cam, giving it a steadier motion. The fly-wheel *m* is used to start the rotary and give it a steady, even motion while in operation.

From the nature of the work which a pick machine must do, it is evident that the length of the stroke must vary, and provision must be made to stop the piston without detriment to the machine when the pick meets no resistance. This is accomplished by the steel buffers *f* and leather cushions *h*, which are supported by the air acting as cushions within the chambers *i*. The small passages connecting the chambers *i* to the main air chest have check-valves *l* in them, which will allow the air to pass into the cushion chamber, but will not permit it to go back into the air chest when the buffers are struck by the piston, whereby a greater cushioning effect is secured, as the air coming from the air chest is at standard working pressure, but when confined in the small cushion chamber and still further compressed by the action of the blow of the piston, the pressure is still further increased.

The air is admitted to the main cylinder through the ports *p*, and is exhausted from the main cylinder through the exhaust-ports *q*, as shown by the arrow. The chambers *i* are drained by means of the plugs *c*. The valve-motion is such that the air on entering the cylinder is cut off at less than half of the piston stroke when the machine is being operated at from 190 to 200 strokes per minute, regardless of the position of the piston.

The sockets of the chuck *o* are tapered and the end of the piston and the pin of the pick have a corresponding taper,

so as to do away with the keying of the chuck on to the piston or of the pick into the chuck. In Fig. 1, the chuck is not used and the tapered socket is in the end of the piston itself. The tapered key *r* passes through the sleeve *t* and the main piston *u* and is held in place by a set-screw *n*. This prevents the piston from turning around and holds the pick in proper position at all times.

The wheels *w* are made of various sizes, ranging from 12 to 20 inches in diameter, so as to suit the various requirements of the different veins. The bushing *y* is made of bronze and is intended to take the wear of the piston, and it can be easily and cheaply renewed when worn.

The machine is kept oiled by the main automatic oiler *x*, from which the oil is carried to the different parts of the machine by the air-current, and by the small oilers *z*, which oil the bearings and supplement the automatic oiler. The weight of this machine is about 735 pounds and its height is about 17 inches, and it will make an undercut of from 5½ to 6 feet.

13. Fig. 3 shows another type of pick machine, the distinctive feature of which is the valve action, which is

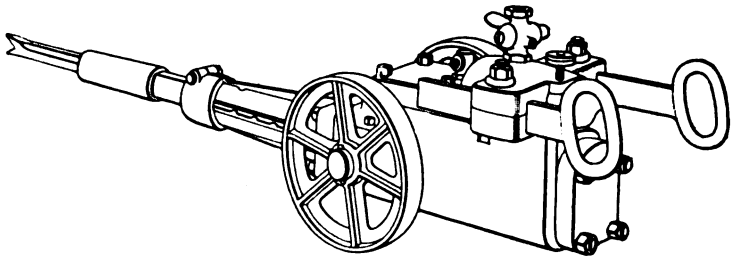

FIG. 3.

positive and depends upon the movement of the main piston on a riffle-bar, and in this respect it differs from the machine already described. The cut-off is adjustable, and consequently the machine can be worked successfully under high or low pressure.

With this type of valve action, the runner can cause the machine to run back up the platform by simply allowing the

pick to rest against some strong projection or shoulder of the coal, and if the pick sticks it must free itself before the back stroke is finished, or otherwise the machine will work back and forwards on the piston.

These two machines illustrate the general types of pick machines, the chief difference being in the valve action.

METHOD OF OPERATING THE PICK MACHINE.

14. The pick machine is placed upon a platform, as shown by Fig. 4, which is inclined towards the face, so as to neutralize the recoil of the machine by gravity, and at the same time enable the operator to advance the machine

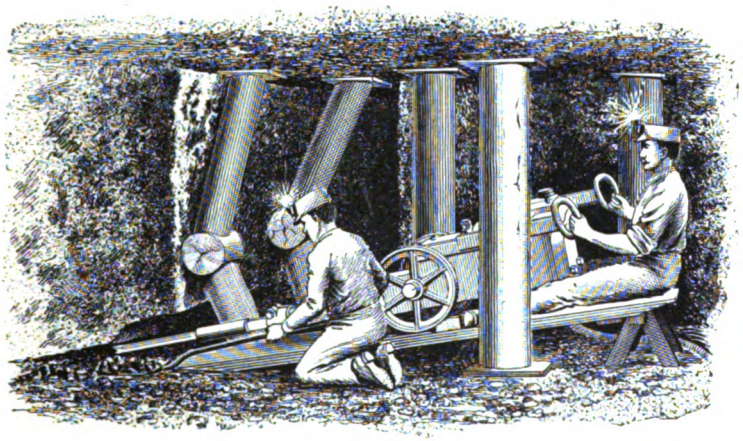

FIG. 4.

as the cut deepens. The pick strikes from 190 to 210 blows per minute, as desired, and as the machine cuts under the coal, the operator allows it to run forwards, down the platform. The helper shovels away the debris or cuttings, using a special long-handled flat shovel. Only two men are required to operate the machine, one skilled man as runner and an ordinary laborer as helper. The runner sits back of the machine, taking hold of one or both of the handles, and directs the blow of the machine by their use. He places one foot, on which, as a rule, he fastens a small block of

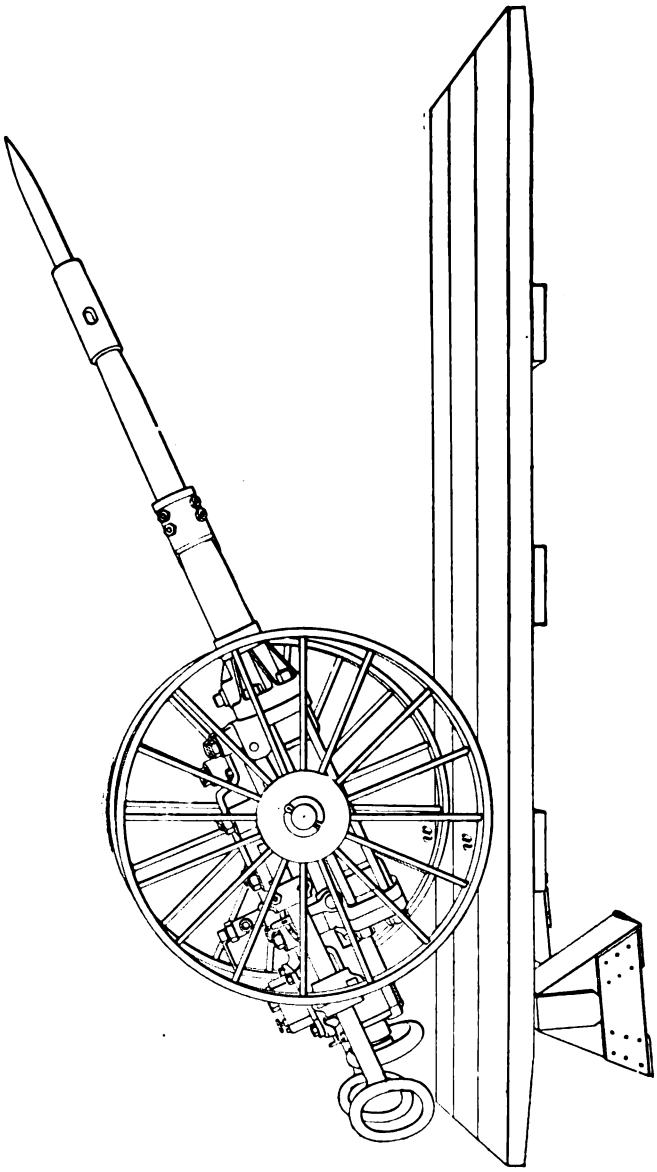

FIG. 5.

wood by a leather strap, under one of the wheels, thereby blocking the recoil of the machine.

15. A groove is first cut in the coal along the bottom to a depth of 1 foot and 3 or 4 feet along the face. This groove is then enlarged by blocking down some of the coal by lifting the pick and striking several inches above the first groove. This enables the runner to see into the cut, and he repeats the same operation until the desired depth is reached. When the cut is finished, it is from 8 to 16 inches high in front and tapers down to 2 or 3 inches in the rear. This gives the cut a V shape and causes the coal, when blasted down with a light charge of powder, to roll over and out of its original position in such a manner that the loaders can readily attack it. Two platforms can be used to advantage, so that when the machine has completed the cut on one, it can be moved to the other without stopping.

16. The pick machine, being mounted on wheels, can be readily shifted from one platform to the other or from one room to the other; very often the machine is simply pulled from one room to the other through break-throughs or cross-cuts by the machine runner and helper, and in this respect it is very much more convenient than other types of machines, which are so heavy as to require mechanical means or the use of a mule and driver to shift them from place to place. As a rule, the pick machine is moved by loading it on a low, flat truck, on which the machine runner and helper can push it without the assistance of mechanical methods.

SHEARING WITH PICK MACHINES.

17. Fig. 5 shows a pick machine, mounted on large wheels, for shearing or making a vertical cut in the coal at the face of an entry. This machine is in all respects similar to the first one described, except that the wheels *w* are larger, as a rule ranging from 34 to 40 inches in diameter. When mounted on 40-inch wheels, it will make a shearing 5½ feet deep and to an equal height or higher if placed on

slack. Fig. 6 shows the machine in position for making a shearing on one side of the entry; it will be noticed that the lower portion of the shearing is made wide enough for the

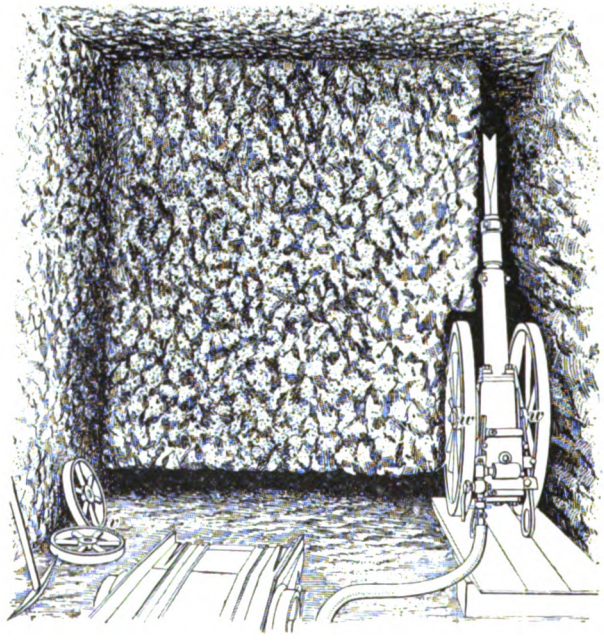

FIG. 6.

wheels to enter the cut. This is necessary where a deep cut is desired, but for shearings of ordinary depth it is not essential.

The operation of the machine for shearing is the same as for undercutting, except that the runner has to assume a different position. Where there is sufficient height, he generally directs the machine by standing up and taking hold of both handles.

If it is desired to both undercut and shear the coal, the undercut is first made, then the small wheels r are taken off the machine and the large wheels w put on.

It is more expensive to shear the coal than it is to blast it even after undercutting, but a larger per cent. of lump coal

is produced in the tight shot, owing to the fact that there is a loose end, and less powder need be used.

The truck, of which the front end is shown in the figure, is used to carry the machine from place to place.

CONDITIONS FAVORABLE AND UNFAVORABLE FOR PICK MACHINES.

18. Pick machines can be used under all conditions favorable to mechanical methods of mining coal, and the only conditions which preclude their use where undercutting is necessary are:

1. Too great a pitch, or dip, of the vein.
2. Bad roof, where props must be set up close to the face and in great numbers.
3. Lack of working space along the face.

The second difficulty can be overcome to a large extent by working in and around the props, as may be seen by referring to Fig. 4, where the machine is shown working among props and cockermegs, used to support the undercut portion of the coal.

The last difficulty is encountered in longwall work, when the gob fills the space where the coal has been taken out to within 2 or 3 feet from the working-face. This can be overcome to some extent by working the machine at an oblique angle instead of square to the face.

19. It will be seen from the construction and method of operating the pick machine that it can cut the coal surrounding any foreign matter which may be embedded in the coal, and can therefore remove such hard material without coming in contact with it and injuring the machine. In this respect pick machines are suitable for working seams of coal having rolls in the bottom and containing sulphur balls, slate, or other impurities, which will blunt or destroy any steel cutting tool which they might come in contact with.

For working pillar coal on which there is any squeeze, the pick machine alone is applicable, owing to the fact that

it is the only machine that is light and can be quickly and easily handled and that is in no way braced against the roof or surrounding coal, and further because it can not be affected while working by a slight settling of the coal undercut.

There is a still further limitation to machines, and that is their work in thin seams of coal; but in a great many cases this can be overcome by doing the undercutting in the bottom fireclay, or clod.

20. A long working-face is best for machine mining, and where it is not possible, either from the nature of the coal and roof or the method of working, the efficiency of mechanical methods of undercutting is lessened, because more branches of pipe are required and more frequent shifting of the machine from place to place is necessary, which consumes time. Again, it requires that more fast ends be cut, that is, the opening cut in the corner of the room, which takes relatively more time than the cutting of the balance of the room after one cut is put in to the desired depth.

21. There is no doubt that as far as practicable the methods of working coal seams will be modified in the future to suit machine mining; for mechanical methods of undercutting have proved to be so practical and economical, and mining-machines have attained such a high degree of perfection, that it will not be profitable to use hand methods.

22. Seams of coal less than 3 feet thick can not be as profitably worked with machines as thicker veins, because it is more difficult to handle the machines, as the workmen are cramped for room; but this limitation will apply with almost equal force to hand methods. Low seams require more undercutting for a given output than high ones, and therefore machine mining is evidently more economical in seams just high enough for the machines to be properly handled, providing other things are equal. Further, as a rule, higher rates are paid in thin seams, giving still more

margin for saving. Of course, with any method of undercutting, a greater percentage of lump or marketable coal is obtained from the high seams. For instance, it will be seen by referring to Fig. 7 that the amounts of coal made fine by undercutting in the seams *A* and *B* are equal, because the undercuts are the same size, which is generally true in practice.

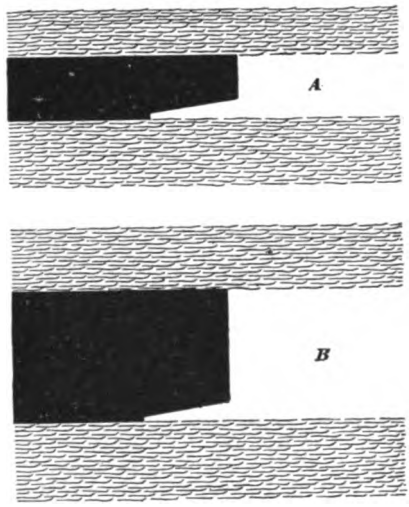

FIG. 7.

In hand methods a quite general rule is to put in an undercut to a depth equal to the height of the coal, but in machine mining this rule is not so closely followed, although the rule holds good to a considerable extent, as the best results in blasting are secured by following it approximately. If this rule is followed, the ratio of small coal to lump coal is the same for high or low seams, provided the undercut is V-shaped.

WORKING CAPACITIES OF PICK MACHINES.

23. Aside from the machine itself, this depends upon the nature of the coal mined and the strength and tact of the runner. A good machine, such as has been illustrated, can undercut 450 square feet in 10 hours, where an ordinary man, doing nothing but undercutting, could undercut about 120 square feet in the same time. In other words, a pick machine will undercut from 50 to 100 tons of coal in 10 hours in seams varying in thickness from 4½ to 6 feet. The cost of undercutting coal with pick machines in seams from 4½ to 6 feet thick is approximately 10 cents per ton. These figures must not be confused with phenomenal records

which have been made and which are the exception and not the rule. In Western Pennsylvania, a pick machine has undercut as much as 1,400 square feet in 9 hours, and in 8-foot seams the pick machines have each cut as high as 240 tons per shift of 10 hours.

CALCULATIONS RELATING TO PICK MACHINES.

24. The work done by each stroke of a pick machine can be calculated by the formula

$$U = \frac{H \times 33{,}000}{n}, \qquad (1.)$$

in which U = work done per stroke;
H = horsepower;
n = number of strokes per minute.

EXAMPLE.—A 5-horsepower pick machine makes 165 strokes per minute; what amount of work is done by the cutting edge of the pick per stroke?

SOLUTION.— $U = \frac{5 \times 33{,}000}{165} = 1{,}000$ foot-pounds. Ans.

25. The force of a blow struck by a pick machine can be determined by the formula

$$F = \frac{v^2 W}{2 g d}, \qquad (2.)$$

in which F = cutting force of pick in pounds;
v = velocity of pick in feet per second at moment of impact;
W = weight of pick (and piston) in pounds;
d = depth of cut per stroke in feet;
g = 32.16.

EXAMPLE.—It is found that a pick machine whose pick and piston weigh 200 pounds cuts to a depth of 2 inches per stroke, and that the velocity of the pick at impact is 20 feet per second. What is the cutting force of the pick?

SOLUTION.— $F = \frac{20^2 \times 200 \times 12}{2 \times 32.16 \times 2} = 7{,}462.7$ pounds, nearly. Ans

26. The student should carefully notice that the force with which the pick strikes depends largely upon the distance it penetrates the coal. For instance, if the pick struck soft "mother coal," it would penetrate it for perhaps a foot, while if it struck hard rock it would penetrate it for perhaps only $\frac{1}{4}$ of an inch. In either case the energy stored up in the pick at impact would be given up in a space equal to the depth of the cut, and therefore, since it requires a greater resistance to stop the pick in $\frac{1}{4}$ of an inch than it does to stop it in 1 foot, it is evident that the blow is greater on the rock than on the "mother coal."

27. The velocity of the pick at impact can be determined by the formula

$$V = \sqrt{\frac{2gapl}{w}}, \text{ or } \sqrt{\frac{2gU}{w}}, \qquad \textbf{(3.)}$$

in which V = velocity at impact in feet per second;
g = 32.16;
a = area of piston in square inches;
p = steam pressure in pounds per square inch;
l = length of stroke in feet;
w = weight of pick and piston in pounds;
U = work done per stroke.

EXAMPLE.—The diameter of the piston of a pick machine is 4 inches, the weight of the piston and pick is 200 pounds, the length of the stroke is 10 inches, and the air is used at a pressure of 75 pounds per square inch. What is the velocity of the pick at impact?

SOLUTION.—

$$V = \sqrt{\frac{2 \times 32.16 \times 3.1416 \times 2^2 \times 75 \times 10}{200 \times 12}} = 15.9 \text{ feet per second, nearly.}$$

Ans.

28. If the power remains the same, it is evident that the greater the number of strokes of a pick machine the less will be the energy given to each stroke, and consequently the depth of cut will be less. It has been found most economical to use a given power in producing a comparatively small cutting force and rapid blows of the pick.

PICK SHEARING-MACHINE.

29. Fig. 8 shows a pick or direct-acting shearing-machine especially adapted for driving entry where the coal will shoot from the solid. The principle of the machine is

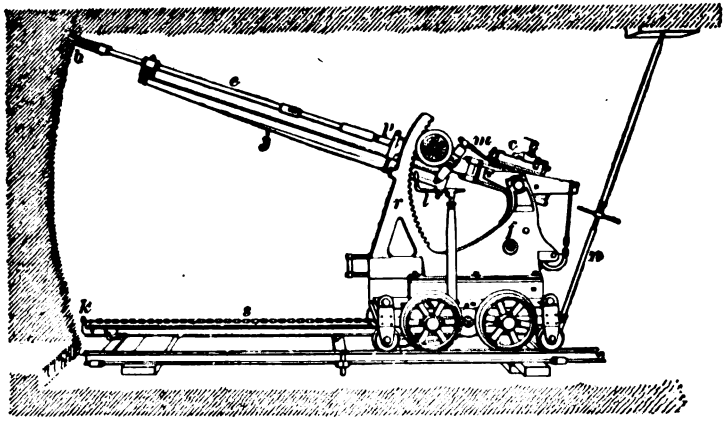

FIG. 8.

essentially the same as that of the pick machines already described. The cylinder *c* is pivotally supported on the frame *f*, so that it can move through an angle of about 60°. The gib *j* supports the cutter rod *e*, which is an extension of the piston-rod *p*, and on the end of which is placed the bit *b*. The operation of the machine is entirely under the control of the operator, who directs the blows by means of the lever *m*, which works a system of gears engaging with the curved rack *r*. A special piece of track bound together with iron ties is kept in advance of the common track for the machine to stand upon while at work. The chain *s*, which is fastened to the end *k* of the rail and the bottom of the rear jack *n*, is used to hold the machine in place and to advance it by turning the lever *l* whenever a cut has been made from top to bottom equal in depth approximately to the length of the stroke of the piston.

30. This machine will make a shearing in the center of the entry 6 inches wide, from 5 to 8 feet deep, and from

4 to 10 feet high. It strikes quickly, about 300 strokes per minute, and weighs 1,600 pounds. A great advantage with this form of shearer is its ability to work above and below large and around small sulphur balls, the former being broken when possible by a hammer and the latter being removed without actually cutting them up, which is practically impossible.

31. Shearing-machines make it possible to drive entry rapidly and at the same time to produce lump or good marketable coal, and there can be no doubt but that these advantages will hasten the time when it will be commercially possible to adopt the best all-around method of working almost every seam of coal, namely, longwall retreating, which consists of driving entries to the boundaries of the territory to be developed and working out the coal from the boundaries to the drift mouth or shaft bottom.

CHAIN-CUTTER MACHINES.

DESCRIPTION OF A CHAIN-CUTTER MACHINE.

32. Fig. 9 shows a view of a chain-cutter machine which consists essentially of a bed-frame, a sliding chain-cutter frame, and an engine. The bed-frame consists of two rectangular steel channel-bars *a* and two steel angle-bars *b* fastened together by means of heavy cast-steel and wrought-iron braces *c*. The feed-racks *d*, which are made of the best rolled steel and have machine-cut involute teeth, are mounted on the bed-frame. These racks are made up in sections, so that in case a tooth gets broken it can be replaced without renewing the entire rack. The rear end of the bed-frame is provided with hooks *e* for moving the machine, and a cross-bar *f*, on which the jack for taking the backward thrust of the machine is placed.

A heavy steel cross-girt *j* joins the channel-bars *a* at the front end of the bed-frame. The jack *g*, by which the machine is braced against the coal face, is placed on top of

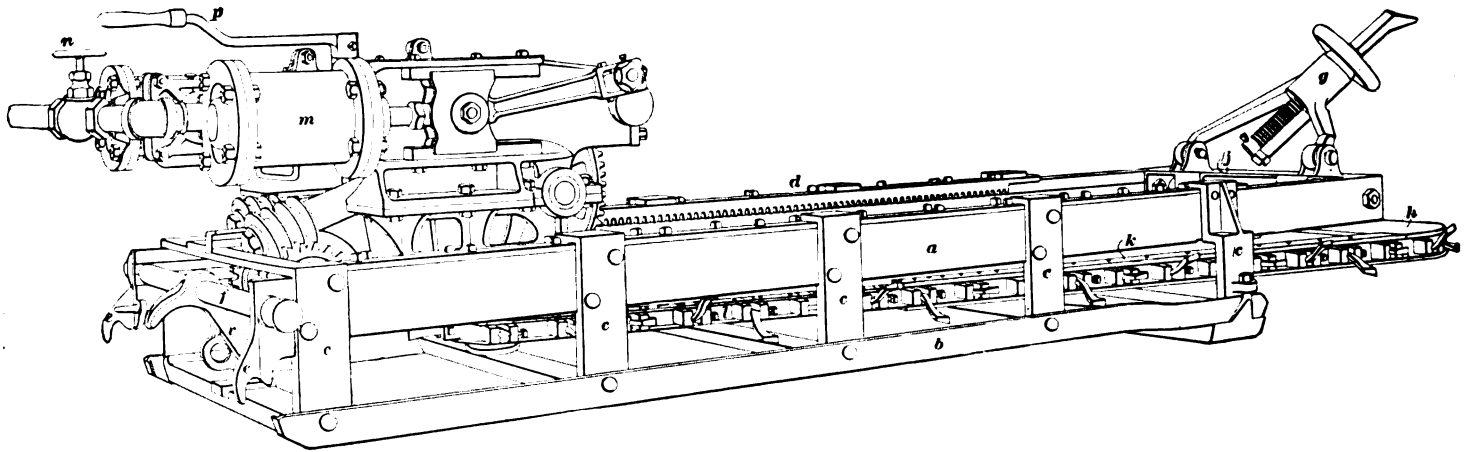

FIG. 9.

this cross-girt, and the guides for the center rail of the sliding cutter frame are attached to the bottom of it. These guides consist of two adjustable steel parts of extra length, to give large wearing surfaces to the composition gibs which form the bearing of the center rail. The bed-frame is designed strong and rigid, so that there can be no bending due to the inequalities in the floor of the mine or the jacking down of the machine just before starting a cut. This rigidity of the frame does away with the friction which is unavoidable in light flexible frames.

The cutter frame is shaped like an isosceles triangle, and consists merely of one steel center rail, a cutter-head *h*, and two side guides *k* for the cutter chain *l*. This sliding frame is contained wholly, with the exception of the cutter-head, within the stationary bed-frame. This arrangement insures perfect protection to persons working around the machine while it is in operation or being moved from one place to another. As this frame comes in direct contact with the coal, it is made strong and has large wearing surfaces, and as its shape is triangular, only three wheels are required for the cutter chain—two sheaves in the cutter-head and a sprocket-wheel at the apex of the frame for conveying power to the cutter chain. The center rail is secured to the sliding carriage, on which the engine *m* is placed, by means of a steel step casting. An auxiliary cutter (not shown in the figure) is placed at the middle and on top of the cutter-head *h* to resist the side thrust produced by the cutter chain.

The driving mechanism consists of two steel pinions and two steel gears, while the feeding mechanism consists of a system of worms and gears. The valve *n* controls the air supply to the engine, and the feed mechanism is controlled by the lever *p*.

33. Owing to the fact that these machines must be taken from one room to another, their size is restricted within certain limits. For instance, as they must be placed upon a truck, they can not be wider than the gauge of the

track nor longer than a mine-car, otherwise special provision would have to be made with regard to the width and height of many portions of the haulageways. This obstacle, however, is not of any particular consequence, as it is found that other conditions, such as weight and room at the working-face, reduce the most economic size for these machines even below that required for transportation.

34. Fig. 10 shows a side view (*a*) and a front view (*b*) of a portion of a cutter chain. It also shows a bit or cutter (*c*), which is made of good tool steel. The endless chain carrying the cutters is subjected to great stresses and

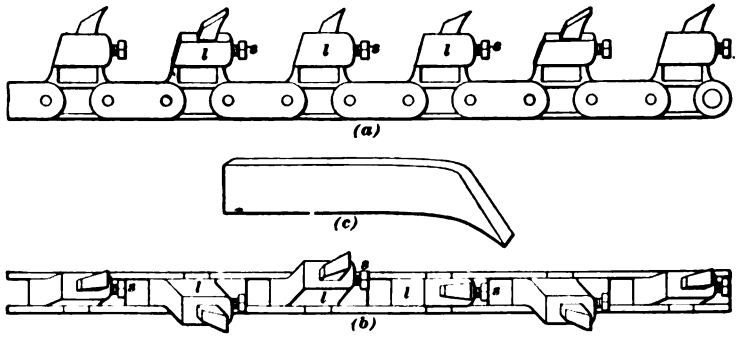

FIG. 10.

a great amount of wear and tear, and consequently must be made strong and of as few parts as possible. Since the cutters must be sharpened frequently, provision must be made to make them detachable. This is done by means of sockets in each alternate link *l*, in which the cutters are placed and held by set-screws *s*.

TYPES OF CHAIN-CUTTER MACHINES.

35. The general principle and construction are the same for all modern chain-cutter machines, the only difference being in the details, which the student can readily understand after studying one type, as soon as he sees them, and therefore they need not be described in this Paper.

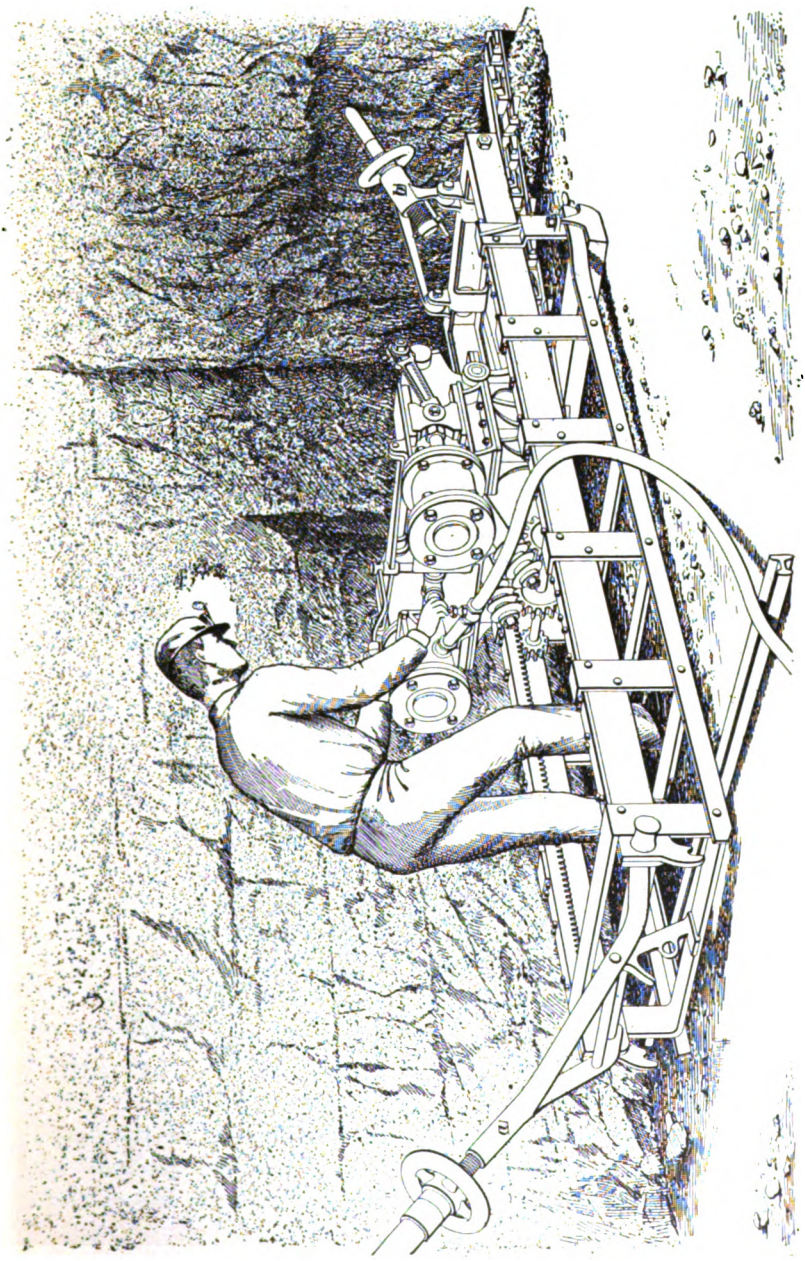

FIG. 11.

METHODS OF OPERATING AND SHIFTING CHAIN-CUTTER MACHINES.

36. The operation of these machines can be understood by referring to Fig. 11, in which one is shown at work. It is first placed directly in front of the working-face, at the point where the undercut is to be started, and leveled up to suit the bottom of the seam of coal. By placing an iron rail under the rear end, the machine can be slid along easily after each cut is made. The machine is held rigidly in place by the rear jack *a* being placed against the roof and tightened up, and the front jack *b* being braced tightly against the face of the coal. The operator usually stands as shown, and as the chain cleans the cuttings away as they are made, a helper is not absolutely necessary, as is the case with pick machines; yet it is best to have an ordinary laborer to keep the cuttings shoveled away and help the runner slide the machine along the face of the room from time to time as each cut is completed.

37. When the cut is made across the room, the machine is slid to the road head and mounted on a truck such as is

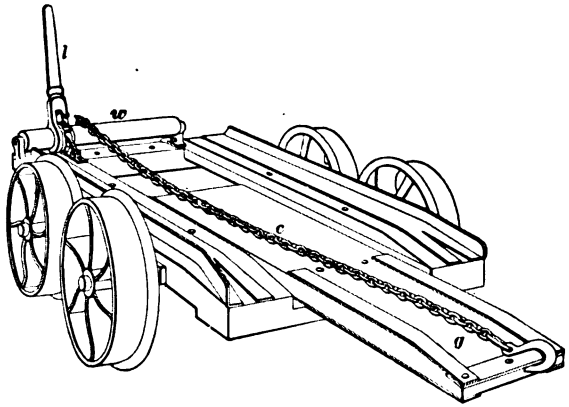

FIG. 12.

shown in Fig. 12. The truck is run to the end of the road and the guide *g* run out. The front end of the machine is then placed upon this guide and the hook on the end of the

chain *c* is placed in the hole in the brace *v*, Fig. 9, at the middle of the rear end of the machine. The machine is finally pulled on to the truck by means of the windlass *w*, which is operated by the ratchet-lever *l*. The truck is then drawn to the next place by a mule or horse and the machine run off to begin a new cut as before.

For low seams the bed-frames of the machines are provided with axles and wheels. The wheels are removed while the machine is working and replaced whenever it is necessary to transport it.

CONDITIONS FAVORABLE AND UNFAVORABLE TO CHAIN-CUTTER MACHINES.

38. In order that chain-cutter machines can be used, it is essential that the seam of coal be comparatively free from balls of iron pyrites, for it is practically impossible to cut through them; and if the cutters come in contact with a large sulphur ball, they break or become blunted, or something else is liable to break about the machine. If the cutter chain is suddenly stopped while running at full speed, enormous stresses are set up throughout the various parts of the machine, showing that the weakest part should be strong enough to withstand such stresses.

Another condition under which these machines can not be worked is where the roof is bad and props must be used close to the face of the coal. A clear space of 12 to 16 feet in width is necessary along the face to work chain-cutter machines. It is found that these machines are failures at some mines on account of the incessant jarring of the roof by the rear jack. Where there are cross-slips in the roof, the runner is in great danger of rock falling from the roof on account of this jarring.

39. It is impracticable to work coal-cutting machines either in pitching or in very low seams, because of the difficulty in handling them under the conditions which exist there. In pitching seams, transporting the machine from one place to another is tedious and troublesome, and great

difficulty is encountered in keeping the machine up to its work and sliding it along the face a short distance at a time as the cuts are finished. In low seams, however, the greatest difficulty is found in sliding the machine along the face, because there is not sufficient room for the workmen to use the bars and levers to advantage. Chain-cutter machines can not be used to undercut coal having a squeeze upon it, which is generally the case in pillars, because the coal presses down upon the cutter-head while the machine is working, and eventually stops it.

On the other hand, seams which are comparatively level and free from sulphur balls can be worked more satisfactorily and economically with chain-cutter machines than with any other type, providing, of course, that the roof is good enough to permit their use.

WORKING CAPACITY OF CHAIN-CUTTER MACHINES.

40. There are so many conditions, such as hard coal, bad roof, slips, and sulphur balls in the coal, and time required for moving and for repairs, which affect the results of chain-cutter machines that it is impossible to give anything but an approximation of their capacity. A good chain-cutter machine, however, will make from 30 to 45 cuts, 44 inches wide and 6 feet deep, in 10 hours, under moderately fair conditions.

CHAIN-CUTTER SHEARING-MACHINES.

41. These have not been used to any considerable extent as yet, and none have been built to run by compressed air, electricity being the power used. They are in principle, however, like the ordinary chain-cutter machine, except that the sliding frame is held in a vertical plane and the bed-frame is supported on columns.

CALCULATIONS RELATING TO CHAIN-CUTTER MACHINES.

42. The rate of feed is proportional to the speed of the cutter chain in a chain-cutter machine. Hence the cutting force of the chain can be found by the formula

$$F = \frac{P \times 33{,}000}{S}, \qquad (4.)$$

in which F = cutting force of cutter chain in pounds;
P = horsepower of engine;
S = speed of cutter chain in feet per minute.

EXAMPLE.—If a 15-horsepower engine drives a cutter chain at the rate of 300 feet per minute, what is the mean cutting force of the chain?

SOLUTION.— $F = \frac{15 \times 33{,}000}{300} = 1{,}650$ pounds. Ans.

It is also evident that the rate of advance and the speed of a chain cutter are inversely proportional to the hardness of the coal being cut, providing the power remains the same.

CUTTER-BAR MACHINES.

43. These machines have been almost entirely replaced by the chain-cutter types, because it has been found difficult to make them strong enough to withstand the strains to which a mining-machine is subjected when coal containing balls of iron pyrites or a roll in the bottom is encountered. The horizontal cutter-bar which contains the teeth or cutters is turned by a sprocket-chain, and the driving mechanism and cutter-bar are advanced as the cutting proceeds, very much the same as the sliding frame and driving mechanism of the chain-cutter machine. There is a chain on both sides of the bed-frame, which is provided with scrapers to convey the cuttings from the cutter-bar to the front of the undercut.

Where conditions are favorable, the cutter-bar machine has a capacity about equal to the chain-cutter machine, and it can be worked under conditions suitable for a chain-cutter machine.

THE LONGWALL MINING-MACHINE.

44. The longwall mining-machine, as its name implies, is especially designed for undercutting a longwall face. It consists of an engine or a motor mounted on a bed-frame, and a large cutter wheel, in the periphery of which are placed the cutters or bits, in a manner quite similar to that of setting the cutters in the cutter chain or the cutter-bar of the machines already described. The bed-frame is mounted on wheels which run either on a single rail or an ordinary track laid parallel to the face of the coal. The feeding mechanism is usually variable, and in case foreign matter is encountered, the operator can vary the angle of the cutter wheel so as to cut over or under such obstacles. This also enables the operator to follow the irregularities in the bottom of the seam. The rail or track on which the machine travels is taken up behind and laid in front of the machine, making it possible under favorable conditions to keep the machine continually at work and to make an undercut 800 feet long and from 3½ to 5 feet deep in 10 hours.

Owing to the fact that longwall methods are not generally employed in America, these machines are used mostly in Europe, and even there they are not very extensively used. Electricity is used to run the modern longwall machines, and a description of such a machine is given in another Paper.

THE AUGER MINING-MACHINE.

45. This machine is constructed on the principle of making an undercut by boring a great number of holes near the bottom of the seam, in such a manner that the adjacent ones will intersect each other. It consists of a number of augers placed in the same plane and parallel to each other, a bed-frame, and an engine or motor. The augers are simultaneously turned by the engine through a system of gear-wheels, and the bits of the augers form a broken line, so the one hole will cut into the other; and a cut equal in depth to the length of the augers and equal in width to the

distance across the face of the bits will be made when the augers have advanced the full run of the machine. Otherwise the machine is made and handled like the chain-cutter or cutter-bar machine. These auger mining-machines have not been used to any great extent, and, further, they are rapidly falling into disuse. For this reason they are not illustrated or more fully described.

THE STANLEY HEADER.

46. This machine is shown in Fig. 13. The driving and the feeding mechanisms are placed upon a massive frame *a*, which is mounted on wheels. When the machine is in place to commence work, it is held fast by the top

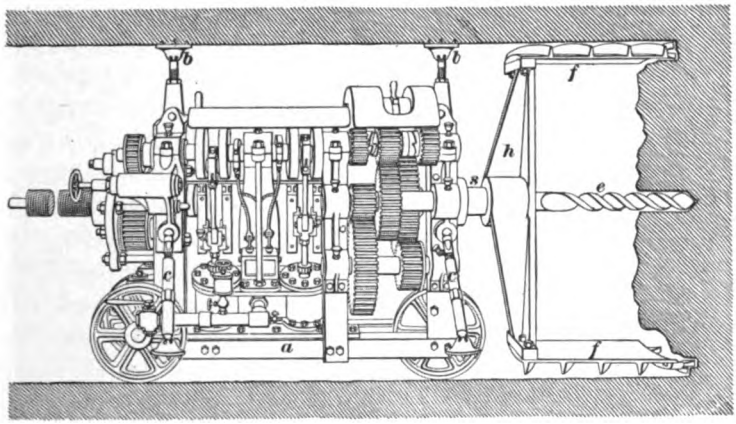

FIG. 13.

jacks *b* and the side ones *c*. At the end of the main shaft *s* an auger drill *e* is placed for the purpose of steadying the cutter frame while the machine is working. The cutter frame consists of the cross-head *h* and the arms *f*, on the ends of which the cutters or bits are placed. The driving mechanism is so constructed that different rates of speed of the cutter frame can be produced for a given rate of feed

advance, at the will of the operator or when different degrees of hardness are found in the coal. As the main shaft rotates, it advances and turns the cutter frame. The bits cut out an annular groove from 3 to 3½ inches wide, forming a complete cylinder of coal as long as the arms *f*. When this is done, the machine is run back and the coal is taken down and loaded up. The machine is again set in place and another cylinder cut out.

The cuttings are forced to the front of the annular groove by the scrapers on the arms *f*, and from here they are raked to one side of the machine by a helper whenever the revolving arms are not in the way. Lumps of coal which fall from the face are also drawn to the side by the helper, and finally loaded into a car. In many of these machines, however, the cuttings and the coal that fall while the machine is working are taken from the face by a friction worm and loaded into a mine-car by means of a conveyer or elevator.

47. The principal use of this machine is for entry driving, especially where it is not desired to make lump coal and where the work must be pushed rapidly. The Stanley header can cut out a cylinder of bituminous coal 4 feet in diameter and 5 feet in length in 15 minutes, and after making the necessary allowance for removals, a rate of advance equal to 75 feet per shift of 10 hours is accomplished. Where it is necessary to drive wide entries, two machines may be worked side by side, thus driving two parallel entries which nearly intersect each other. The thin pillar left between them can easily be cut out with a pick. If the coal could be removed as quickly as the cutting is done, the machine could advance an entry 12 feet wide 25 feet in 10 hours. As coal varies so much in hardness and in the amount of impurities it contains, it is possible to give only an approximation of the cost of driving entry with the Stanley header, which is about 25 cents per linear foot when a single cylinder 4 feet in diameter is cut out.

DYNAMOS AND MOTORS.

(PART 1.)

INTRODUCTION.

1. Electricity is the name given to the cause of all electrical phenomena. The word is derived from a Greek word meaning *amber*, that substance having been observed by the Greeks to possess peculiar properties which we now understand to be due to electricity.

Although electrical science has advanced sufficiently far to recognize the fact that the exact nature of electricity is unknown, yet recent research tends to demonstrate that all electrical phenomena are due to a peculiar strain or stress of a medium called *ether;* that when in this condition the *ether* possesses *potential energy* or *capacity for doing work*, as is manifested by attractions and repulsions, by chemical decomposition, and by luminous, heating, and various other effects.

In all probability, electricity is not a form of matter, for it possesses only two physical properties in common with material substances, namely, **indestructibility** and **elasticity;** it does not possess *weight*, *extension*, or any of the other physical properties of matter.

Electrical science is founded upon the effects produced by the action of certain forces upon matter, and all knowledge of the science is deduced from these effects. The study of the fundamental principles of electricity is an analysis of a series of experiments, and the classification of the results in each particular case under general laws and rules. It is not necessary to keep in mind any hypothesis of the exact nature of electricity; its effects and the laws which govern them

are quite similar to those of well-known mechanical and natural phenomena, and will be best understood by comparison. The two most essential features, therefore, in acquiring a knowledge of the electrical science, are: first, to learn how to develop electrical action; and, second, to determine the effects produced by it.

2. The number of processes for developing electrical action is almost innumerable, but the most important can be classified under one of the following general heads:

(*a*) By the contact of dissimilar substances;
(*b*) By chemical action;
(*c*) By the application of heat;
(*d*) By magnetic induction.

3. The presence of electricity, also, can be detected in many different ways; under certain conditions, it will

(*a*) Cause attractions and repulsions of light particles of matter, such as feathers, pith, gold-leaf, pieces of paper, etc.

(*b*) Decompose certain forms of matter into their various elements and cause other chemical changes.

(*c*) Produce motion in a freely suspended magnetic needle, such as the needle of a compass.

(*d*) Violently agitate the nervous system of all animals, causing a **shock.**

(*e*) Heat the substances through which it acts.

These are the principal effects produced by the action of electricity; others of less importance will appear from time to time during the study of the different branches of the science.

4. Electricity may either appear to reside upon the surface of bodies as a **charge,** under *high pressure* or *tension,* or flow through their substance as a **current,** under comparatively *low pressure* or *tension.*

That branch of the science which treats of charges upon the surface of bodies is termed **electrostatics,** and the charges are said to be **static charges** of electricity.

Electrodynamics is that branch which treats of the action of *electric currents.*

STATIC CHARGES.

5. When a glass rod or a piece of amber is rubbed with silk or fur, the parts rubbed will have the property of attracting light particles of matter, such as pieces of silk, wool, feathers, gold-leaf, pith, etc., which, after momentary contact, are repelled. These attractions and repulsions are caused by a static charge of electricity residing upon the surface of those bodies. A body in this condition is said to be **electrified.**

A better experiment for demonstrating this action is to suspend a small pith-ball by a silk thread from a support or bracket, as shown in Fig. 1. If a *static charge* of electricity be developed on a *glass rod*, by rubbing it with *silk*, and the rod be brought near the pith-ball, the ball will be attracted to the rod, but, after momentary contact, will be repelled. By this contact the ball receives a charge of the same nature as that on the glass rod, and as long as the two bodies retain their charges, mutual repulsion will take place whenever they are brought near each other. If a stick of *sealing-wax*, electrified by being rubbed with fur, is approached to another pith-ball, the same results will be produced, i. e., the ball will fly towards the sealing-wax, and after contact will be repelled. But the charges respectively developed in these two cases are not in the same condition. For, if, after the pith-ball in the first case had been touched with the *glass rod* and repelled, the electrified *sealing-wax* be brought in the vicinity, *attraction* would take place between the ball and the sealing-wax. Conversely, if the pith-ball be charged with the electrified sealing-wax, it will be repelled by the wax and attracted by the glass rod.

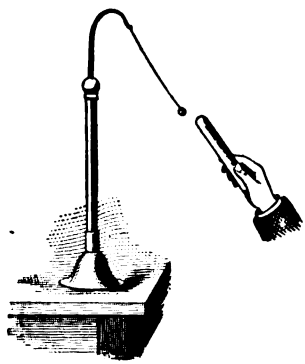

FIG. 1.

An electric charge developed upon *glass* by rubbing it

with silk has been termed, for convenience, a **positive (+) charge,** and that developed on resinous bodies, by rubbing with flannel or fur, a **negative (−) charge.**

Neither a positive nor a negative charge is produced alone, for there is always an equal quantity of both charges produced; one charge appearing on the body rubbed, and an equal amount of the opposite charge upon the rubber.

The intensity of the charge developed by rubbing the two substances together is independent of the actual amount of friction which takes place between the bodies. For, in order to obtain the highest possible degree of electrification, it is only necessary to bring every portion of one surface into intimate contact with every particle or every portion of the other; when this is done, no extra amount of rubbing can develop any greater charge upon either substance.

6. From the foregoing experiments are derived the following laws:

When two dissimilar substances are placed in contact, one of them always assumes the positive and the other the negative condition, although the amount may sometimes be so small as to render its detection very difficult.

Electrified bodies with similar charges are mutually repellent, while electrified bodies with dissimilar charges are mutually attractive.

7. In the following list, called the **electric series,** the substances are arranged in such order that each receives a *positive* charge when rubbed or placed in contact with any of the bodies following it, and a *negative* charge when rubbed with any of those which precede it:

1. Fur.	6. Cotton.	11. Sealing-wax.
2. Flannel.	7. Silk.	12. Resins.
3. Ivory.	8. The body.	13. Sulphur.
4. Crystals.	9. Wood.	14. Gutta-percha.
5. Glass.	10. Metals.	15. Gun-cotton.

For example, *glass* when rubbed with *fur* receives a *negative* charge, but when rubbed with *silk* it receives a *positive* charge.

CONDUCTORS AND NON-CONDUCTORS.

8. Only that part of a dry glass rod which has been rubbed will be electrified; the other parts will produce neither repulsion nor attraction when brought near a suspended pith-ball. The same is true of a piece of sealing-wax or resin. These bodies do not readily *conduct* electricity; that is, they *oppose* or *resist* the passage of electricity through them. Therefore, it can only reside as a *charge* upon that part of their surface where it is developed. Experiments show that when a metal receives a charge at any point, the electricity immediately passes or flows through its substance to all parts. Metals, therefore, are said to be **good conductors** of electricity. Bodies have accordingly been divided into two classes, i. e., **non-conductors,** or **insulators,** or those bodies which offer a very high **resistance** to the passage of electricity, and **conductors,** or those bodies which offer a comparatively low resistance to its passage. This distinction is not absolute, for all bodies conduct electricity to some extent, while there is no known substance which does not offer some resistance to the flow of electricity.

In giving the following list and dividing the different substances into two classes, it should be understood that it is done only as a guide for the student. Between these two classes are many substances which might be included in either list, and no hard or fast line can be drawn.

Silver, Copper, Other Metals, Charcoal, Ordinary Water, The Body.	CONDUCTORS.
Paper. Oils, Porcelain, Wood.	NON-CONDUCTORS OR INSULATORS.

Silk, Resins, Gutta-percha, Shellac, Ebonite, Paraffin, Glass, Dry Air, etc.	NON-CONDUCTORS OR INSULATORS.

ELECTRODYNAMICS.

9. In dealing with *electric currents*, the word **potential** will be substituted for the general and vague phrase *electrical condition.*

The term *potential*, as used in electrical science, is analogous with *pressure*, in gases; *head*, in liquids; and *temperature*, in heat.

When an electrified body, *positively* charged, is connected to the earth by a conductor, electricity is said to flow *from* the body *to* the earth; and, conversely, when an electrified body, *negatively* charged, is connected to the earth in a similar manner, electricity is said to flow *from* the earth *to* that body. This is called the **direction of flow** of an electric current. That which determines the *direction of flow* is the relative *electrical potential* or *pressure* of the two charges in regard to the earth.

It is impossible to say with certainty in which direction electricity really flows, or, in other words, to declare which of two points has the higher and which the lower electrical potential, or pressure. All that can be said with certainty is that when there is a *difference of electrical potential*, or *pressure*, electricity tends to flow *from* the point of higher *to* that of the lower *potential* or *pressure.*

For convenience, it has been arbitrarily assumed and conventionally adopted that that electrical condition called *positive* is at a higher potential or pressure than that called *negative*, and that electricity tends to flow *from* a *positively to* a *negatively* electrified body.

The zero or normal level of water is taken as that of the surface of the sea, and the normal pressure of air and gases as that of the atmosphere at the sea-level; similarly, there is a *zero potential*, or *pressure*, *of electricity* in the earth itself. The earth may be regarded as a reservoir of electricity of infinite quantity, and its potential, or pressure, may therefore be taken as zero.

The electrical condition called *positive* is assumed to be at a higher potential or pressure than the earth, and that called *negative* is assumed to be at a lower potential or pressure than the earth.

10. It must be understood that electricity is a *condition of matter*, and not matter itself, for it possesses neither *weight* nor *dimensions*. Consequently, the statement that electricity is *flowing* through a conductor must not be taken too literally; it must not be supposed that any material substance, such as a liquid, is actually passing through the conductor in the same sense as water flows through a pipe. The statement that electricity is flowing through a conductor is only another way of expressing the fact that the conductor and the space surrounding it are in different conditions than usual and that they possess unusual properties. The action of electricity, however, is quite similar in many respects to the flow of liquids, and the study of electric currents is much simplified by the analogy.

11. In order to produce what is called an electric current, *it is first necessary to cause a difference of electrical potential between two bodies or between two parts of the same body.*

It was stated that when two dissimilar substances are simply placed in contact, one always assumes the positive and the other the negative condition; or, in other words, *a difference of electrical potential is developed between the two bodies.*

Placing a piece of copper and zinc in contact will develop a difference of electrical potential which can easily be detected. The same results will follow if the plates are

slightly separated from each other and placed in a vessel containing saline or acidulated water, leaving a small portion of one end of each plate exposed. The exposed ends of the zinc and copper are now electrified to different degrees, or, in other words, there is a *difference of electrical potential* between them, one plate being at a higher potential than the other.

When the exposed ends are connected by any conducting material, the potential between the plates tends to *equalize* and a momentary rush or discharge of electricity passes between the exposed ends through the conductor, and also between the submerged ends through the liquid. During its passage through the liquid, the electricity causes certain chemical changes to take place; these chemical changes cause in their turn a fresh *difference of potential* between the plates, which is followed immediately by another equalizing discharge, and that by a further difference, and so on. These changes follow one another with great rapidity—so rapid, in fact, that it is impossible to distinguish them apart, and they appear absolutely *continuous*. The equalizing flow which is constantly taking place from one plate to the other is known as a **continuous current** of electricity. Consequently, an electric current becomes continuous when the difference of potential is constantly maintained.

By the use of a very delicate instrument, the submerged end of the copper is found to be electrified with a *negative* charge, while the submerged end of the zinc is electrified with a *positive* charge. The direction of the current, therefore, will be *from* the *submerged* end of the zinc through the liquid *to* the *submerged* end of the copper, and *from* the *exposed* end of the copper *to* the *exposed* end of the zinc.

12. A **simple voltaic,** or **galvanic, cell,** Fig. 2, is an apparatus for developing a continuous current of electricity. It consists essentially of a vessel containing saline or acidulated water in which are submerged two plates of dissimilar metals, or one metal and a metalloid (as, for instance, carbon).

Electrolyte is the name given to the liquid, which, as it transmits the current, is decomposed by it.

The two dissimilar metals, when spoken of separately, are called **voltaic,** or **galvanic, elements;** and, when taken collectively, are known as a **voltaic couple.**

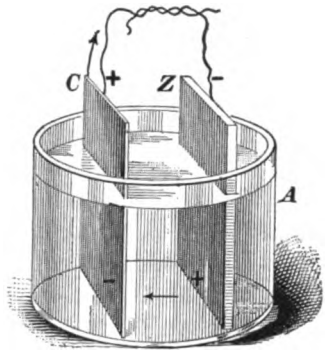

FIG. 2.

A **voltaic,** or **galvanic, battery** is a number of simple cells properly joined together.

Electrodes, or **poles,** of a cell or battery are metallic terminals or connectors attached to the exposed ends of the plates, and are used to connect the cell or battery to any exterior conductor or to another cell or battery.

It should be remembered that the polarity of the submerged ends of the plates is always of opposite sign to that of their electrodes. For example, in the case of the zinc and copper couple, the electrode fastened to the zinc would be spoken of as the *negative* electrode of the cell, while the zinc itself would be the *positive* element of the cell, its submerged end being *positive.*

In any voltaic, or galvanic, couple, the element which is acted upon by the electrolyte will always be the *positive* element, and its electrode the *negative* electrode of the cell.

13. The following list of voltaic elements composes what is called the **electromotive series:**

1. Zinc.	5. Iron.	9. Copper.
2. Cadmium.	6. Nickel.	10. Silver.
3. Tin.	7. Bismuth.	11. Gold.
4. Lead.	8. Antimony	12. Platinum.
	13. Graphite.	

Any two of these metals form a *voltaic couple* and produce a difference of potential when submerged in saline or

acidulated water, the one standing first on the list being the *positive* element or plate, and the other the *negative*. For example, if *nickel* and *graphite* are used, the *nickel* will be acted upon by the liquid and will form the *positive* element; but if *nickel* and *zinc* are used, the *zinc* will be acted upon by the liquid, and hence will be the *positive* element.

The difference of potential will be greater in proportion to the distance between the positions of the two substances in the list. For example, the difference of potential developed between *zinc* and *graphite* is much greater than that developed between *zinc* and *nickel;* in fact, the difference of potential developed between zinc and graphite is equal to the difference of potential developed between zinc and nickel *plus* that developed between nickel and graphite.

Electricity flowing as a *current* differs from *static charges* in three important degrees — namely, (1) its *potential* is much lower, (2) its *actual quantity* is greater, and (3) it is *continuous.*

A substance charged from a strong voltaic battery possesses the property of attracting light substances only in the slightest degree; in fact, the attractions can only be detected with the most delicate instruments. The *potential* of a current of electricity is comparatively so small that a voltaic battery composed of a large number of cells is not sufficient to produce a spark more than one or two hundredths of an inch long in air, whereas a small, rapidly moving leather belt will sometimes produce static sparks of more than an inch in length. The length of the spark affords a means of estimating potentials, a high potential being capable of producing a longer spark than a low potential, but the length of spark gives us no means of estimating the **current strength** or quantity of electricity flowing. The actual *quantity* of electricity is measured by the amount of water it will decompose. Gauged by this standard, the quantity of electricity produced by a voltaic cell no larger than a thimble would be found greater than that from a large, rapidly moving belt, giving static sparks several inches in length.

14. There are three different methods of connecting or grouping the cells in a voltaic battery: *In series; in parallel, or multiple-arc; in multiple-series.*

Cells are connected **in series** when the positive electrode of the first cell is connected to the negative electrode of the second, and the positive electrode of the second is connected to the negative electrode of the third, and so on, as shown in the diagram, Fig. 3. In this we have adopted the usual signs for representing a cell, the short, broad line representing the positive electrode of the cell and the long, narrow line the negative electrode. In this method of connecting or grouping of cells, when the negative electrode of the first cell is connected to the positive electrode of the last by some exterior conductor, the total current produced will flow successively through each cell. This method of grouping is used when there is available a large number of *low* potential cells and a *high* potential is desired, as in long telegraph-lines or any other *high* resistance circuit.

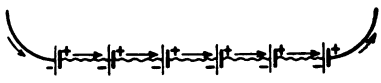

FIG. 3.

15. Cells are connected in **parallel,** or **multiple-arc,** when the positive electrodes of all the cells are connected to one main positive conductor and all the negative electrodes are connected to one main negative conductor, as shown by the diagram, Fig. 4. In parallel, or multiple-arc, grouping, only a part of the total current flowing in main conductors will pass through each cell. This method of grouping is used when it is desired to obtain a strong current from a number of cells (when the external resistance is *low*), as in electro-plating.

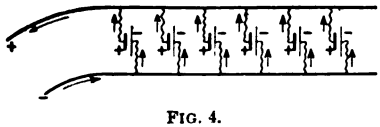

FIG. 4.

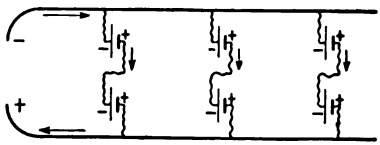

FIG. 5.

16. Cells are connected in **multiple-series** by arranging them in several groups, each group being composed

of several cells connected in series, and then connecting all the groups together in parallel, or multiple-arc, as shown in the diagram, Fig. 5. This method is used where both a higher potential and a stronger current are required than any one cell of the group will give.

CIRCUITS.

17. A **circuit** is a path composed of a conductor, or of several conductors joined together, through which an electric current flows from a given point around the conducting path back again to its starting-point.

A circuit is **broken,** or **open,** when its conducting elements are disconnected in such manner as to prevent the current from flowing.

A circuit is **closed,** or **complete,** when its conducting elements are so connected as to allow the current to flow.

A circuit in which the earth, or ground, forms part of the conducting path is called an **earth,** or a **grounded,** circuit.

The **external** circuit is that part of a circuit which is outside or external to the electric source.

The **internal** circuit is that part of a circuit which is included within the electric source.

In the case of the simple voltaic cell, the *internal circuit* consists of the two metallic plates, or elements, and the electrolyte; an *external circuit* would be a wire or any conductor connecting the free ends of the electrodes.

18. Conductors are said to be connected **in series** when they are so joined together as to allow the current to pass consecutively through each. For example, Fig. 6 represents a *closed* circuit consisting of a simple voltaic cell *B* and four conductors *a*, *b*, *c*, and *d*, connected *in series*.

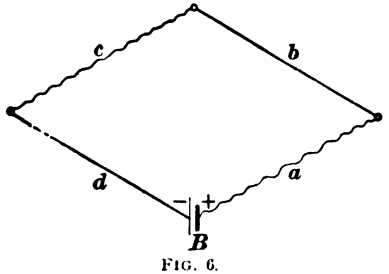

FIG. 6.

A circuit which is divided into two or more branches,

each branch transmitting part of the main current, is a **derived,** or **shunt, circuit,** and the separate branches are said to be connected in **parallel,** or **multiple-arc.** An example of a *derived* circuit of two branches in *parallel* is shown in Fig. 7. The main current flows first through the conductor *a*, then divides between the branches *c* and *b*, and finally uniting and completing the circuit through the conductor *d*; the two branches *c* and *b* being the conductors, which are connected in *parallel*, or *multiple-arc*. The way the current divides, and how the amount which will flow through the branches *b* and *c* is determined, will be treated of later.

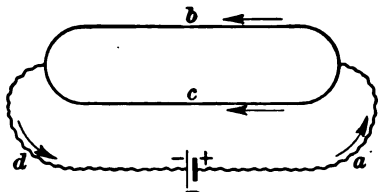

FIG. 7.

MAGNETISM.

19. Magnets are substances which have the property of attracting pieces of iron or steel, and the term **magnetism** is applied to the cause of this attraction. *Magnetism* exists in a natural state in an ore of iron, which is known in chemistry as *magnetic oxide of iron*, or *magnetite*. This magnetic ore was first found by the ancients in *Magnesia*, a city in Asia Minor; hence, substances possessing this property have been called magnets.

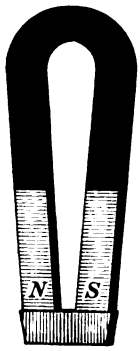

FIG. 8.

It was also discovered that when a small bar of this ore is suspended in a horizontal position by a thread, it has the property of pointing in a north and south direction. From this fact the name **lodestone**—*leading-stone*—was given to the ore.

When a bar or needle of hardened steel is rubbed with a piece of lodestone, it acquires magnetic properties similar to those of the lodestone, without the latter losing any of its own force. Such bars are called **artificial** magnets.

Artificial magnets which retain their magnetism for a long time are called **permanent magnets.**

The common form of artificial, or permanent, magnet, Fig. 8, is a bar of steel bent into the shape of a *horseshoe* and then hardened and magnetized. A piece of soft iron, called an **armature,** or a **keeper,** is placed across the two free ends, which helps to prevent the steel from losing its magnetism.

20. If a bar magnet is dipped into iron filings, the filings are attracted towards the two ends and adhere there in tufts, while towards the center of the bar, half way between the two ends, there is no such tendency. (See Fig. 9.) That part of the magnet where there is no appar-

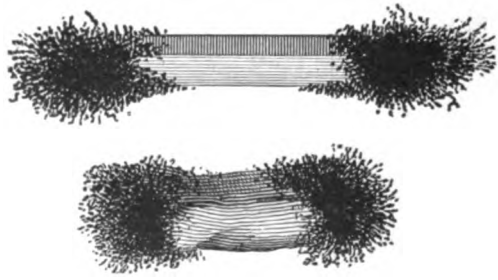

FIG. 9.

ent magnetic attraction is called the **neutral line,** and the parts around the two ends where the attraction is greatest are called **poles.** An imaginary line drawn through the center of the magnet, from end to end, connecting the two poles together, is called the **axis of magnetism.**

A **compass** consists of a magnetized steel needle, Fig. 10, resting upon a fine point, so as to turn freely in a horizontal plane. When not in the vicinity of other magnets or magnetized iron, the needle will always come to rest with one end pointing towards the north and the other towards the south. The end pointing northward is the **north-seeking pole,** or, simply, the *north pole*, and the opposite end is the **south-**

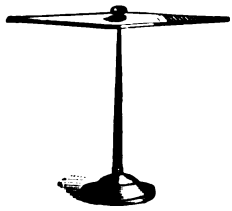

FIG. 10.

seeking or *south pole*. This *polarity* applies as well to all magnets.

If the *north pole* of one magnet is brought near the *south pole* of another magnet, attraction takes place; but if two north poles or two south poles are brought together, they repel each other. In general, *like magnetic poles repel one another; unlike poles attract one another.*

The earth is a great magnet whose magnetic poles coincide nearly, but not quite, with the true geographical north and south poles. A freely suspended magnet, therefore, will always point in an approximately north and south direction.

It is impossible to produce a magnet with only one pole. If a long bar magnet is broken into any number of parts, each part will still be a magnet and have two poles, a north and a south one.

21. Magnetic substances are those substances which, although not in themselves magnets, that is, not possessing poles and neutral lines, are, nevertheless, capable of being attracted by a magnet. In addition to iron and its alloys, the following elements are magnetic substances: *Nickel*, *cobalt*, *manganese*, *oxygen*, *cerium*, and *chromium*. These, however, possess magnetic properties in a very inferior degree compared with iron and its alloys. All other known substances are called **non-magnetic substances.**

22. The space surrounding a magnet, in which any magnetic substance will be attracted or repelled, is called its **magnetic field,** or, simply, its **field.** Magnetic attractions and repulsions are assumed to act in a definite direction and along imaginary lines called **lines of magnetic force,** or, simply, **lines of force,** and every magnetic field is assumed to be traversed by such *lines of force*—in fact, to exist by virtue of them. Their position in any plane may be shown by placing

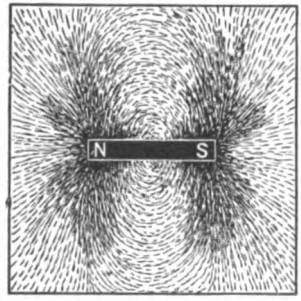

FIG. 11.

a sheet of paper over a magnet, and sprinkling fine iron filings over the paper. In the case of a bar magnet lying on its side, the iron filings will arrange themselves in curved lines extending from the north to the south pole, as shown in Fig. 11. A view of the magnetic field looking towards either pole of a bar magnet would exhibit merely radial lines, as shown by the filings in Fig. 12.

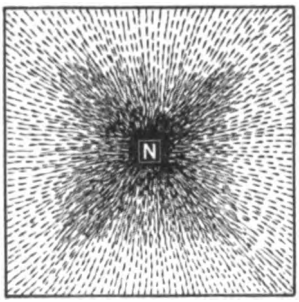

FIG. 12.

Every line of force is assumed to pass out from the north pole, make a complete circuit through the surrounding medium and into the south pole; thence, through the magnet, to the

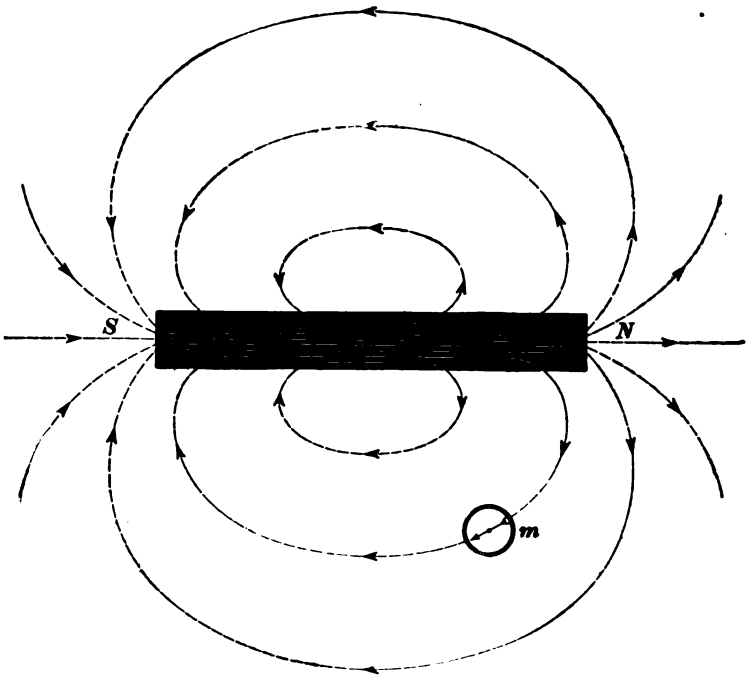

FIG. 13.

north pole again, as shown in Fig. 13. This is called the *direction of the lines of force*, and the path which they take is called the *magnetic circuit.*

23. The *direction of the lines of force* in any magnetic field can be traced by a small, freely suspended magnetic needle, or a small compass such as indicated by *m* in Fig. 13. The north pole of the needle will always point in the direction of the lines of force, the length of the needle lying either parallel or tangent to the lines of force at that point. If the needle be moved bodily in the direction towards which the north pole points, its center or pivot will describe a path coinciding with the direction of the lines of force in that part of the magnetic field.

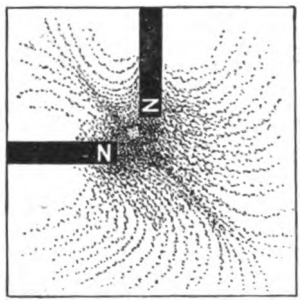

FIG. 14.

NOTE.—In all diagrams, the *direction of the lines of force* will be represented by arrow-heads upon dotted lines.

Lines of force can never intersect each other; when two opposing magnetic fields are brought together, as indicated by the iron filings in Fig. 14 and Fig. 15, the lines of force from each will be crowded and distorted from their original direction until they coincide in direction with those opposing, and form a resultant field in which the direction of the lines of force will depend upon the relative strengths of the two opposing negative fields. The resulting poles thus formed are called **consequent poles.**

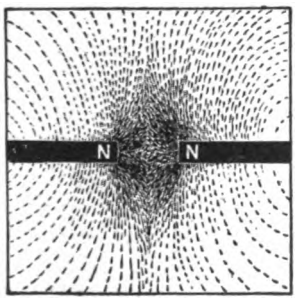

FIG. 15.

In every magnetic field there are certain stresses which produce a *tension* along the lines of force and a *pressure* across them; that is, they tend to *shorten* themselves from end to end, and *repel* one another as they lie side by side.

24. When a magnetic substance is brought into a magnetic field, the lines of force in that vicinity crowd together and all tend to pass through the substance. If the substance is free to move on an axis (but not bodily) towards the magnet pole, it will always come to rest with its greatest extent or length in the direction of the lines of force. The body will then become a magnet, its south pole being situated where the lines of force enter it, and its north pole where they pass out. The production of magnetism in a magnetic substance in this manner is called **magnetic induction.** The production of artificial magnetism in a hardened steel needle or bar by contact with lodestone is one case of magnetic induction.

The **amount,** or **quantity, of magnetism** is expressed by the total number of lines of force contained in a magnetic circuit.

Magnetic density is the number of lines of force passing through a unit area measured perpendicularly to their direction.

ELECTROMAGNETISM.

25. If a conductor be placed parallel to the magnetic axis of a compass needle, and a current passed through the

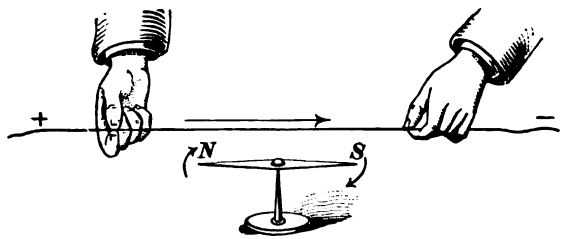

FIG. 16.

conductor in either direction, the needle will tend to place itself at right angles to the conductor, as shown by arrows in Fig. 16; or, in general, an electric current and a magnet exert a mutual force upon each other. From the definition

given in Art. **22,** the space surrounding the conductor is a *magnetic field.* If the conductor is threaded up through a piece of cardboard, and iron filings are sprinkled on the cardboard, they will arrange themselves in concentric circles around the conductor, as represented in Fig. 17. This effect will be observed throughout the entire length of the conductor, and is caused entirely by the current. In fact, every conductor conveying a current of electricity can be imagined as completely surrounded by a sort of magnetic *whirl,* the magnetic density decreasing as the distance from the current increases. (See Fig. 18.)

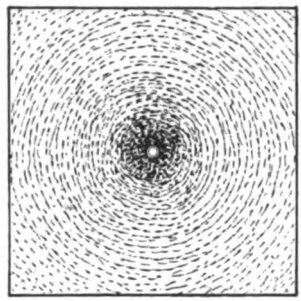

FIG. 17.

26. If the current in a horizontal conductor is flowing *towards* the *north,* and a compass is placed *under* the conductor, Fig. 19, the north pole of the needle will be deflected towards the *west;* by placing the compass *over* the wire, Fig. 20, the north pole of the needle will be deflected towards the *east.* By reversing the direction of the current in the conductor, the needle will point in the opposite direction in each case, respectively.

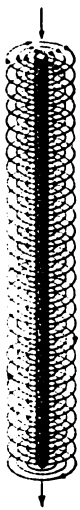

FIG. 18.

If the conductor is placed *over* the needle, and then bent back *under* it, forming a loop as shown in Fig. 21, the tendency of the current in both top and bottom portions of the wire is to deflect the north pole of the needle in the same direction.

From these experiments, knowing the direction of current in the conductor, the following rule is deduced for the direction of the lines of force around the conductor.

Rule.—*If the current is flowing in the conductor away from the observer, then the direction of the lines of force*

will be around the conductor in the direction of the hands of a watch.

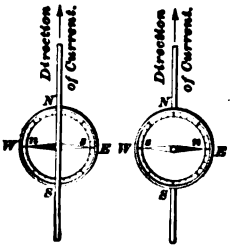

FIG. 19. FIG. 20.

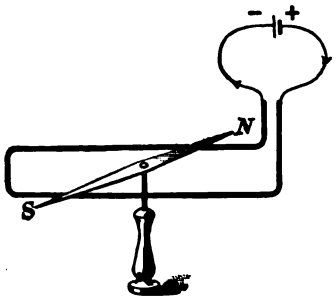

FIG. 21.

The direction of the lines of force around a conductor is indicated in Fig. 22 where the current is assumed to be flowing downwards, that is, piercing the paper.

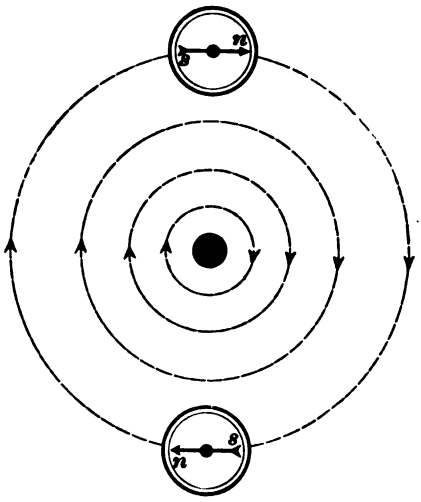

FIG. 22.

27. Two parallel conductors, both transmitting currents of electricity, are either mutually attractive or repellent, depending upon the relative direction of their currents. If the currents are flowing in the *same* direction in both conductors, as represented in Fig. 23, the lines of force will tend to surround both conductors and contract, thus *attracting* the conductors. If, however, the currents are flowing in opposite directions, as in Fig. 24, the lines of force lying between the conductors will have the same direction, and therefore *repel* the conductors.

28. If the conductor carrying the current is bent into the form of a loop, as in Fig. 25, then all the lines of force

around the conductor will thread through the loop in the same direction. By bending the conductor into a long *helix*

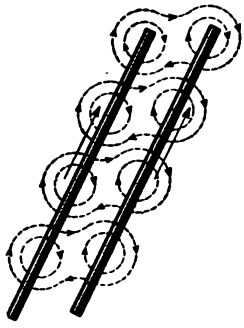

FIG. 23.

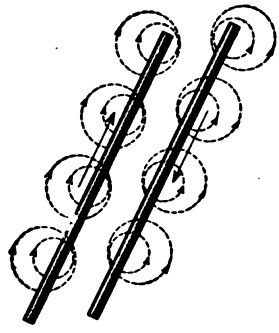

FIG. 24.

of several loops, the lines of force around each loop will coincide with those around the adjacent loops, forming several long lines of force which thread through the entire helix, entering at one end and passing out at the other.

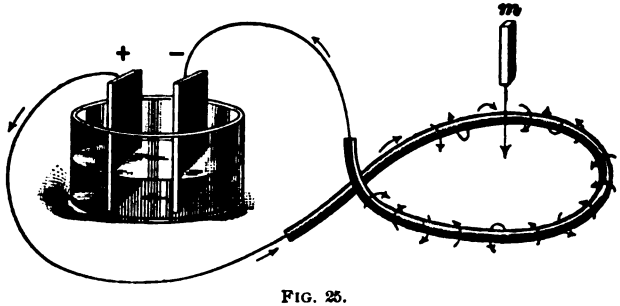

FIG. 25.

The same conditions now exist in the helix as exist in a bar magnet, i. e., the lines of force *pass out* from one end and *enter* the other. In fact, the helix possesses a *north* and a *south pole*, a *neutral line*, and all the properties of attraction and repulsion of a magnet. If it is suspended in a horizontal position and free to turn, it will come to rest pointing in a north and south direction.

A helix made in this manner, around which a current of electricity is circulating, is called a **solenoid.**

29. The **polarity** of a solenoid, that is, the direction of the lines of force which thread through it, depends upon the direction in which the conductor is coiled and the direction of the current in the conductor.

To determine the polarity of a solenoid, knowing the direction of the current:

Rule.—*In looking at the end of the helix, if it is so wound that the current circulates around the helix in the direction of the hands of a watch, that end will be a south pole; if in the other direction, it will be a north pole.*

Fig. 26 represents a conductor coiled in a right-handed helix. If the current starts to flow from the end where the observer stands, that end will be a south pole and the observer will be looking through the helix *in the direction of the lines of force.*

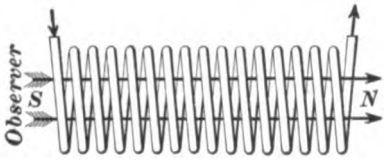

FIG. 26.

The polarity of a solenoid can be changed by reversing the direction of the current in the conductor.

30. In Art. **24** it was stated that when a magnetic substance is brought into a magnetic field, the lines of force in that field crowd together, and all try to pass through that substance; in fact, they will alter their circular shape, and extend a considerable distance from their original position, in order to pass through it. A magnetic substance, therefore, offers a better path for the lines of force than air or other non-magnetic substances.

The facility afforded by any substance to the passage through it of lines of force is called **magnetic permeability**, or, simply, **permeability.**

The *permeability* of all non-magnetic substances, such as air, copper, wood, etc., is taken as 1, or unity. The permeability of soft iron may be as high as 2,000 times that of air. If, therefore, a piece of soft iron be inserted into the magnetic circuit of a solenoid, the number of lines of force will

be greatly increased, and the iron will become highly magnetized.

31. A magnet produced by inserting a magnetic substance into the magnetic circuit of a solenoid is an **electromagnet,** and the magnetic substance around which the current circulates is called the **core.** (See Fig. 27.) The solenoid is generally termed the **magnetizing coil.**

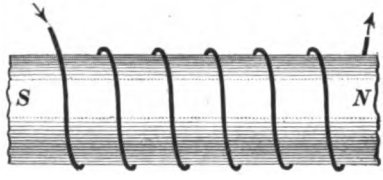

FIG. 27.

In the ordinary form of electromagnet, the magnetizing coil consists of a large number of turns of *insulated* wire, that is, wire covered with a layer or coating of some non-conducting or insulating material, usually silk or cotton; otherwise the current would take a shorter and easier circuit from one coil to the adjacent one, or from the first to the last coil through the iron core without circulating around the magnet.

The simplest form of an electromagnet is the bar magnet. As usually constructed, it consists of a straight bar of iron or steel *B*, fitted into a *spool*, or *bobbin*, made of hard vulcanized rubber or some other inflexible insulating material. The magnetizing coil of fine insulated copper wire *w* is wound in layers in the bobbin, as shown by the cross-section in Fig. 28.

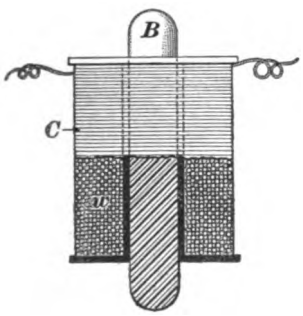

FIG. 28.

The rule for determining the polarity of a solenoid, Art. **29,** is the same for an electromagnet. It makes no difference whether the wire is wound in one layer or in any number of layers, or whether it is wound towards one end and then wound back again over the previous layer towards the other end; so long as the current circulates continually in the same direction around the core, the polarity of the magnet will remain unchanged.

32. The most convenient form of electromagnet for a great variety of uses is the *horseshoe*, or **U**-*shaped*, electromagnet, Fig. 30. It consists of a bar of iron bent into the shape of a horseshoe with straight ends and provided with two magnetizing coils, one on each end of the magnet. The two ends which are surrounded by the coils are the *cores* of the magnet, and the arc-shaped piece of iron joining them together is known as the **yoke** of the magnet. The ordinary **U**-shaped electromagnet is made in three parts: namely, two iron cores wound with the magnetizing coils, and a straight bar of iron joining the two cores together for a yoke, as shown in Fig. 29. In looking at the free ends of the two cores, Fig. 30, the current should circulate around one core in an opposite direction to that around the other. If the current circulates around both cores in the same direction, the lines of force produced in the two cores, respectively, oppose one another, forming two like poles at their free ends and a *consequent pole* in the yoke. The total

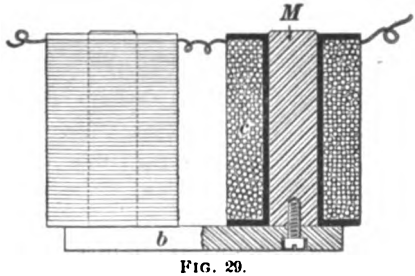

FIG. 29.

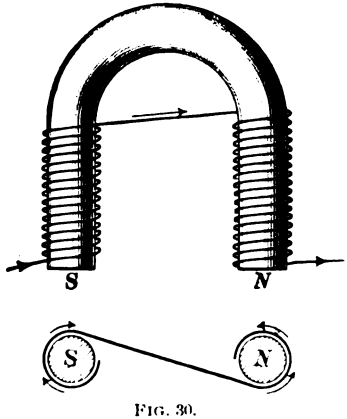

FIG. 30.

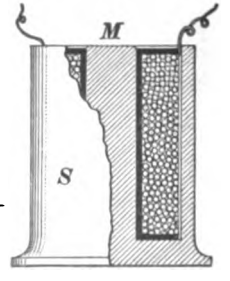

FIG. 31.

number of lines of force produced by both coils will be

greatly diminished, and the magnet will exhibit only a small amount of magnetic attraction.

Another common form of electromagnet is known as the **iron-clad** electromagnet. In its simplest form, Fig. 31, it contains only one magnetizing coil and one core. The core is fastened to a disk-shaped iron yoke, and the magnetic circuit is completed through an iron shell which rises up from the yoke and completely surrounds and protects the coil.

ELECTRICAL UNITS.

33. The three principal units used in practical measurements of a current of electricity are:

The **ampere,** *or the practical unit denoting the rate of flow of an electric current, or the strength of an electric current.*

The **ohm,** *or the practical unit of resistance.*

The **volt,** *or the practical unit of electrical potential or pressure.*

Electromotive force, written E. M. F., or simply E., is the *total generated difference of potential* in any electric source or in any circuit. For example, the total difference of potential developed between the plates of a simple voltaic cell would be the *electromotive force* of that cell.

Ordinarily, the term *electromotive force* is used to express any difference of potential; that is, the electromotive force is the difference of potential between two points.

The relation of these three practical units will be better understood by the analogy of the flow of water through a pipe. The force which causes the water to flow through the pipe is due to the *head* or *pressure;* that which *resists* the flow is the friction of the water against the inside of the pipe, and the amount would vary with circumstances. The *rate of flow*, or the *current*, may be expressed in *gallons per minute*, and is a ratio between the head or pressure and the resistance caused by the friction of the water against the inside of the pipe. For, as the pressure or head *increases*,

the rate of flow or current *increases* in proportion; as the resistance *increases* the current *diminishes.*

In the case of electricity flowing through a conductor, the *electromotive force*, or *potential*, corresponds to the pressure or head of water, and the resistance which a conductor offers to the flow of electricity to the friction of the water against the pipe. The *strength of an electric current*, or the *rate of flow of electricity*, is also a ratio—a ratio of the electromotive force and the resistance of the conductor through which the current is flowing. This ratio as applied to electricity was first discovered by Dr. G. S. Ohm, and has since been called **Ohm's law.**

34. Ohm's Law.—*The strength of an electric current in any circuit is directly proportional to the electromotive force developed in that circuit, and inversely proportional to the resistance of the circuit;* i. e., *it is equal to the electromotive force divided by the resistance.*

Ohm's law is usually expressed algebraically, thus:

$$\text{Strength of current} = \frac{\text{electromotive force}}{\text{resistance}}.$$

If the electromotive force (E) is expressed in *volts* and the resistance (R) in *ohms*, the formula will give the strength of current (C) directly in *amperes;* thus $C = \frac{E}{R}$.

Before giving examples of the application of Ohm's law, the value and significance of each unit will be treated upon separately.

35. The Ampere, or the Unit Strength of Current.—The strength of an electric current can be described as a *quantity* of electricity flowing continuously every second, or, in other words, it is the rate of flow of electricity, just as the current expressed in *gallons per minute* is the *rate of flow* of liquids. When one unit quantity of electricity is flowing continuously every second, then the rate of flow, or the strength of current, is *one ampere;* if two

unit quantities are flowing continuously every second, then the strength of current is *two amperes*, and so on. It makes no difference in the number of amperes whether the current flows for a long period or for only a fraction of a second; if the quantity of electricity that would flow in one second is the same in both cases, then the strength of the current *in amperes* is the same.

The *international ampere* is defined as the strength of an unvarying current, which, when passed through a solution of nitrate of silver and water, deposits silver at the rate of .01725 grain per second.

Electricity possesses neither *weight* nor *extension*, and therefore an electric current can not be measured by the usual methods adopted for measuring liquids and gases. In liquids, the strength of the current is determined by measuring or weighing the actual quantity of the liquid which has passed between two points in a certain time and dividing the result by that time. The strength of an electric current, on the contrary, is determined directly by the effect it produces, and the actual quantity of electricity which has passed between two points in a certain time is afterwards calculated by multiplying the strength of the current by the time.

36. The principal effects produced by an electric current are given in Art. **3**; of these, the one most generally used for measuring is the action of the current upon a magnetic needle, as shown in Art. **25.** The instrument commonly used in laboratory practice for measuring and detecting small currents of electricity is called the **galvanometer.**

The action of the galvanometer is based upon the principle given in Art. **25,** where a magnetic needle, freely suspended in the center of a looped or coiled conductor, is deflected by a current of electricity passing around the coil or loop. In ordinary practice, the needle is suspended either upon a pivot projecting into an agate cup fixed in the needle, or by a fiber suspension, as shown by *F* in

Fig. 32. In the simpler forms of galvanometers, the magnetic needle itself swings over a dial graduated in degrees; in other forms, a light index needle is rigidly attached to the magnetic needle and swings over a similar dial, as indicated by *I* in Fig. 32; and in the more sensitive galvanometers, Fig. 33, a small reflecting mirror is attached to the fiber suspension and reflects a beam of light upon a horizontal scale situated several inches from the galvanometer.

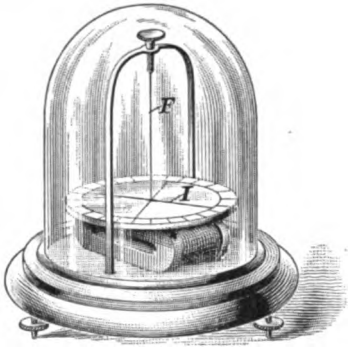

FIG. 32.

In any of these galvanometers, when no current is flowing in the coils, the needle should point in a direction parallel to the length of the coil, Fig. 34. The measuring of

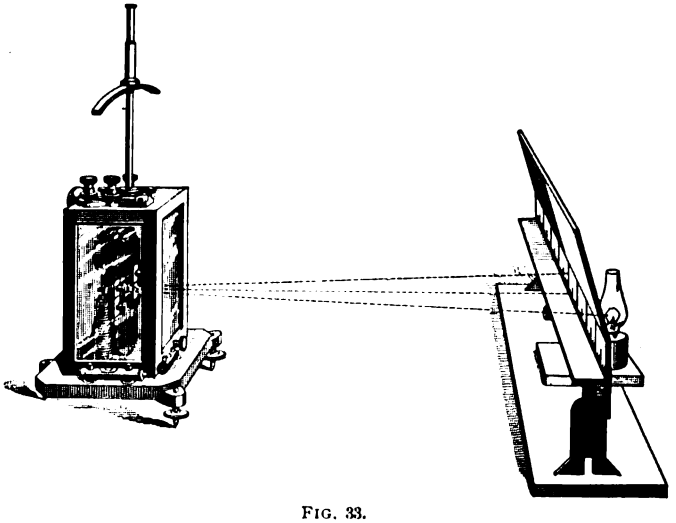

FIG. 33.

currents by most galvanometers depends upon the magnetic needle being held in this position by the magnetic attraction of the earth's magnetism or the attraction of some

adjacent magnet. When a current of electricity passes around the coil, its tendency is to deflect the magnetic needle at right angles to its original position, as explained in Art. **25**, while the tendency of the earth's magnetism is to oppose the movement. The couple thereby produced will cause the needle to be deflected a certain number of degrees from its original position, depending upon the relative strengths of the two magnetic fields. The stronger the current in the coil, the greater the deflection. With a galvanometer of standard dimensions and a magnetic field of known strength, such as the earth's magnetism at a convenient place on its surface, a strength of current can be conventionally adopted as a unit which will produce a certain deflection; all other galvanometers can be calibrated from this standard, and their dials graduated to read the strength of current directly in the conventional unit adopted.

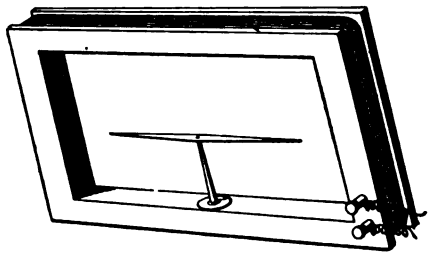

FIG. 34.

37. Commercial and portable instruments are devised for measuring the strength of current directly in *amperes*, and are called **ampere meters**, or simply *ammeters*. The action of the current flowing through the coils in these instruments causes small magnetic needles or other coils of wire to act against either the tension of springs or against gravitational forces. The majority of ammeters are provided with an index needle which travels over a scale or dial graduated in divisions, each division representing one ampere, or fractions or multiples of one ampere.

Fig. 35 shows the general form of a standard Weston ammeter used for commercial testing purposes. The strength of the current flowing in a circuit can be measured directly in amperes by opening the circuit at any convenient

place and connecting the two ends thus formed to the binding-posts p and p'. The direction of the current in the circuit should be determined beforehand, so that it passes *into* the instrument by the binding-post marked with the positive (+) sign; otherwise the index needle will be deflected off the scale in the wrong direction, which is liable to damage the instrument and cause error in reading when the current passes through in the proper direction.

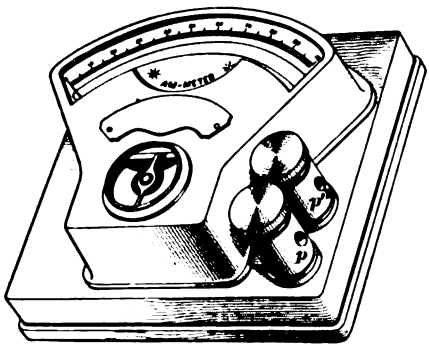

FIG. 35.

38. The Ohm, or the Unit of Resistance.—In Art. **8** it was stated that the resistance varied in different substances; that is, one substance offers a higher resistance to a current of electricity than another. Electrical resistance, therefore, can be defined as a property of matter, varying with different substances, and in virtue of which such matter opposes or resists the passage of electricity.

The resistance which all substances offer to the passage of an electric current is one of the most important quantities in electrical measurements. In the first place, it is that which determines the strength of an electric current in any circuit in which a difference of potential is constantly maintained, as shown by Ohm's law; and in the second place, the unit of resistance, the *ohm*, is the only unit in electrical measurements for which a material standard can be adopted, other quantities being measured by the effect they produce. The basis of any system of physical measurements is generally some material standard conventionally adopted as a unit, physical measurements in each system being made by comparison with the unit of that system.

The unit of electrical resistance now universally adopted is called the **international ohm.** One international ohm is the resistance offered by a column of pure mercury 106.3 centimeters in length and 1 square millimeter in sectional area at 32° F., or the temperature of melting ice. The dimensions of the column expressed in inches are as follows: length, 41.85 inches; sectional area, .00155 square inch. Hereafter the word "international" will be omitted and simply the word "ohm" used; the *international ohm*, however, as defined above, will always be implied unless otherwise stated.

39. If a given conductor offers a resistance of 2 ohms to a current of 1 ampere, it offers the same amount, no more nor less, to a current of 10 amperes. Hence, *the resistance of a given conductor at equal temperatures is always constant, irrespective of the strength of current flowing through it or the electromotive force of the current.*

40. If the length of a conductor be doubled, its resistance will be doubled; that is, the resistance of a given conductor increases as the length of the conductor increases, the resistance being directly proportional to the length of the conductor.

When it is required to find the resistance of a conductor of which the length is varied, and other conditions remain unchanged, the following formula may be used:

$$r_2 = \frac{r_1 l_2}{l_1}. \qquad (1.)$$

In this formula

r_1 = the original resistance;
r_2 = the required or changed resistance;
l_1 = the original length;
l_2 = the changed length.

As in all examples of proportion, the two lengths must be reduced to the same unit.

By this formula, we see that *the resistance of a conductor after its length is changed is equal to the original resistance*

multiplied by the changed length, and the product divided by the original length.

EXAMPLE.—Find the resistance of 1 mile of copper wire, if the resistance of 10 feet of the same wire be .013 ohm.

SOLUTION.— $r_1 = .013$ ohm; $l_1 = 10$ feet; $l_2 = 1$ mile $= 5{,}280$ feet. Then, by formula **1**, the required resistance $r_2 = \frac{.013 \times 5{,}280}{10} =$ 6.864 ohms. Ans.

41. If the sectional area of a conductor is doubled and other conditions remain unchanged, the resistance will be halved. We may, then, obtain the value of the resistance of a conductor for any change in sectional area by the following formula:

$$r_2 = \frac{r_1 a_1}{a_2}, \qquad (2.)$$

in which r_1 = the original resistance of the conductor;
r_2 = the changed resistance;
a_1 = the original sectional area;
a_2 = the changed sectional area.

From the relations here expressed, it will be seen that the resistance varies inversely as the sectional area; that is, *the resistance of a given conductor diminishes as its sectional area increases.*

The resistance of a conductor is independent of the *shape* of its cross-section. For example, this shape may be circular, square, rectangular, or irregular; if the sectional area be the same in all cases, the resistances will be the same, other conditions being similar.

EXAMPLE.—The resistance of a conductor whose sectional area is .025 sq. in. is .32 ohm; what would be the resistance of the conductor if its sectional area were increased to .125 sq. in. and other conditions remain unchanged?

SOLUTION.— $r_1 = .32$ ohm; $a_1 = .025$ sq. in.; and $a_2 = .125$ sq. in. Then, by formula **2**, the required resistance $r_2 = \frac{r_1 a_1}{a_2} = \frac{.32 \times .025}{.125} =$ 064 ohm. Ans.

EXAMPLE.—The sectional area of a certain conductor is .01 sq. in. and its resistance is 1 ohm; if its sectional area be decreased to .001 sq. in. and other conditions remain unchanged, what will be the resistance?

SOLUTION.— $r_1 = 1$ ohm; $a_1 = .01$ sq. in., and $a_2 = .001$ sq. in. By formula **2**, the resistance $r_2 = \frac{1 \times .01}{.001} = 10$ ohms. Ans.

42. When comparing resistances of round copper wires, the following formula is used:

$$r_2 = \frac{r_1 D^2}{d^2}, \qquad \textbf{(3.)}$$

in which r_1 = the original or known resistance;
r_2 = the required resistance;
D = the original diameter;
d = the changed diameter.

This formula is based on the rule that, since the sectional area of a round conductor is proportional to the square of its diameter (sectional area = diameter^2 × .7854), *the resistance of a round conductor is inversely proportional to the square of its diameter.*

EXAMPLE.—The resistance of a round copper wire .2 in. in diameter is 45 ohms; from this calculate the resistance of a round copper wire .3 in. in diameter, other conditions remaining the same in both cases.

SOLUTION.—In this example, $r_1 = 45$ ohms; $D = .2$ inch; and $d = .3$ inch. Hence, by formula **3**, the required resistance

$$r_2 = \frac{45 \times .2^2}{.3^2} = \frac{45 \times .04}{.09} = 20 \text{ ohms.} \quad \text{Ans.}$$

EXAMPLE.—If the resistance of a round German-silver wire $\frac{1}{8}$ in. in diameter is 12.6 ohms, what is the resistance of a round German-silver wire $\frac{1}{16}$ in. in diameter, other conditions being equal in the two cases?

SOLUTION.—In this example, $r_1 = 12.6$ ohms; $D = \frac{1}{8} = .125$ inch; and $d = \frac{1}{16} = .0625$ inch. Hence, by formula **3**,

$$r_2 = \frac{12.6 \times .125^2}{.0625^2} = 50.4 \text{ ohms.} \quad \text{Ans.}$$

43. The resistance of two or more conductors connected in *series* (Art. **14**) is equal to the sum of their separate resistances. For example, if four conductors having separate

resistances of 8, 12, 22, and 34 ohms, respectively, are connected in series, their total or joint resistance would be $8 + 12 + 22 + 34 = 76$ ohms.

44. The **microhm** is a unit of resistance devised to facilitate calculations and measurements of exceedingly small resistances, and is equal to *one millionth* $\left(\frac{1}{1,000,000}\right)$ of an *ohm*. Hence, to express the resistance in *microhms*, multiply the resistance in *ohms* by 1,000,000; and, conversely, to express the resistance in *ohms*, divide the resistance in *microhms* by 1,000,000. For example, .75 ohm = $.75 \times 1,000,000 = 750,000$ microhms; or, 750,000 microhms $= 750,000 \div 1,000,000 = .75$ ohm.

45. The **megohm** is a unit of resistance, devised to facilitate calculations and measurements of exceedingly large resistances, and is equal to 1,000,000 ohms. Therefore, to express the resistance in *megohms*, divide the resistance in *ohms* by 1,000,000; and, conversely, to express the resistance in *ohms*, multiply the resistance in *megohms* by 1,000,000. For example, 850,000 ohms $= \frac{850,000}{1,000,000} = .85$ megohm; or, .85 megohm $= .85 \times 1,000,000 = 850,000$ ohms.

The megohm is used chiefly to measure the resistance of bad conductors and insulators.

46. In order to compare the resistances of different substances, the dimensions of the pieces to be measured must be equal; for, by changing its dimensions, a good conductor may be made to offer the same resistance as an inferior one. Under like conditions, annealed silver offers the least resistance of all known substances. Soft, annealed copper comes next on the list, and then follow all other metals and conductors.

The resistance of a given conductor, however, is not always constant; it changes with the temperature of the conductor. In all metals, the resistance *increases* as the temperature rises; in liquids and carbons, the resistance *decreases* as the

temperature rises. The amount of variations in the resistance caused by a change in temperature for one degree is called the **temperature coefficient.** The temperature coefficients for the common metals are given in Table 1 for degrees Fahrenheit. These coefficients, however, only hold true for a limited change of temperature, and should not be used with extreme changes. The rules given below, making use of these coefficients, are not absolutely accurate, but enough so for practical purposes.

To find the resistance of a conductor after its temperature has risen, knowing its original resistance and the number of degrees rise, other conditions remaining unchanged:

Let r_1 = the original resistance;
r_2 = the resistance after a change in temperature;
k = the temperature coefficient;
t = rise or fall in temperature, degrees Fahrenheit.

Then, for a *rise* in temperature,

$$r_2 = r_1 (1 + t\,k). \qquad (4.)$$

That is, *the resistance of a conductor after its temperature has risen may be obtained by multiplying the original resistance by one plus the product of the number of degrees rise and the temperature coefficient.*

EXAMPLE.—The resistance of a piece of copper wire at 32° F. is 40 ohms; determine its resistance when its temperature is 52° F.

SOLUTION.— $R = 40$ ohms;
$k = .002155$ (from Table 1);
$t = 52 - 32 = 20$ degrees.

By formula **4**, the required resistance $r_2 = r_1 (1 + t\,k) = 40 (1 + 20 \times .002155) = 40 \times 1.0431 = 41.724$ ohms. Ans.

47. To find the resistance of a conductor after its temperature has fallen, knowing its original resistance and the number of degrees fall, other conditions remaining unchanged:

For a *fall* in temperature, $r_2 = \frac{r_1}{1 + t\,k}$. $\qquad (5.)$

That is, *the resistance of a conductor after its temperature has fallen may be obtained by dividing the original resistance by one plus the product of the number of degrees fall and the temperature coefficient.*

EXAMPLE.—The original resistance of a piece of German-silver wire is 16 ohms; find its resistance after its temperature has fallen 22° F.

SOLUTION.— $R = 16$ ohms;
$k = .000244$ (from Table 1);
$t = 22°$ F.

By formula **5**, the required resistance

$$r_2 = \frac{r_1}{1 + tk} = \frac{16}{1 + 22 \times .000244} = \frac{16}{1.005368} = 15.9145 \text{ ohms.} \quad \text{Ans.}$$

48. Specific resistance is the term given to the resistance of substances of unit length and unit sectional area at some standard temperature. In what follows, the specific resistance of a substance is the resistance of a piece of that substance one inch in length and one square inch in sectional area at 32° F., that is, at the temperature of melting ice; this may also be expressed as the resistance of a cube of that substance taken between two opposing faces.

A list of the common metals is given in Table 1, in the order of their relative resistances, beginning with silver, which offers the least resistance. The first column of figures gives the *specific resistance* in microhms of 1 cubic inch of the corresponding metal at 32° F. By applying formula **1**, the resistance of any conductor of known dimensions which is made of one of the metals in the table can be determined. The second column of figures gives the relative resistance of the different metals compared with silver. For example, the resistance of mercury is 62.73 times the resistance of silver, or the resistance of iron is 6.46 times the resistance of silver, and so on.

EXAMPLE.—Find the resistance in ohms of a round column of mercury 70″ high and .05″ in diameter. Ans. 1.3244 ohms.

EXAMPLE.—Find the resistance in ohms of 1 mile of square iron wire (annealed) .1″ on a side. Ans. 24.2352 ohms.

TABLE 1.

Name of Metal.	Resistance, Microhms per Cu. In.	Relative Resistance.	Temperature Coefficient.
Silver, annealed.....	.5921	1.000	002094
Copper, annealed.....	.6292	1.063	.002155
Silver, hard-drawn....	.6433	1.086	.002094
Copper, hard-drawn...	.6433	1.086	.002155
Gold, annealed.....	.8102	1.369	.002028
Gold, hard-drawn.....	.8247	1.393	.002028
Aluminum, annealed..	1.1470	1.935	
Zinc, pressed.....	2.2150	3.741	.002028
Platinum, annealed....	3.5650	6.022	
Iron, annealed.....	3.8250	6.460	
Nickel, annealed.....	4.9070	8.285	
Tin, pressed.....	5.2020	8.784	.002028
Lead, pressed.....	7.7280	13.050	.002150
German Silver.....	8.2400	13.920	.000244
Antimony, pressed....	13.9800	23.600	.002161
Mercury.....	37.1500	62.730	.000400
Bismuth, pressed.....	51.6500	87.230	.001967

49. In a simple voltaic cell the *internal* resistance—that is, the resistance of the two plates and the electrolyte—is of great importance, for it determines the maximum strength of current that can possibly be obtained from the cell. In the common forms of cells, the internal resistance may be excessively large, owing to the resistance of the electrolyte, the specific resistance of ordinary liquids used as electrolytes being from 1 to 20 million times that of the common metals. In liquids, as in all conductors, the resistance increases as the length of the circuit increases, and diminishes as its sectional area increases. Hence, the internal resistance of a simple voltaic cell is reduced by decreasing the distance between the plates or elements and by increasing their active surfaces. The internal resistance

of the ordinary forms of cells varies from about .2 to 20 ohms.

50. For practical and commercial testing, the standard column of mercury, representing the resistance of one ohm, has been replaced by a coil of wire, usually a platinum-silver alloy. The coil is carefully calibrated to offer a resistance of exactly one ohm at some convenient temperature, and is enclosed in a metallic case, the connections to the two ends of the coils being made by two heavy terminals of copper wire passing up through the hard-rubber cover. Such coils are known as *standard ohm coils.* The commercial form of standard ohm coils is shown in Fig. 36.

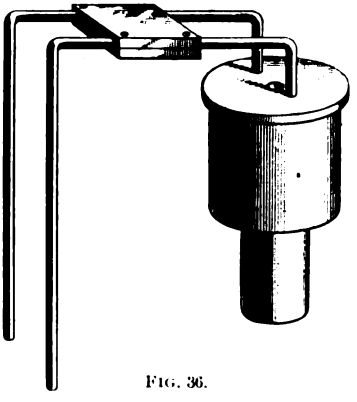

FIG. 36.

51. An apparatus called a **resistance-box** or **rheostat** is largely used for reducing or controlling the strength of currents in various circuits. Such rheostats are connected directly in *series* or *shunt* with the circuit, and are termed *dead resistances.* The resistance in these rheostats is usually made adjustable; that is, the amount of resistance which they offer may be varied at the will of the operator by the use of a sliding contact, or by removable plugs. Rheostats in which the amount of resistance is varied by sliding contacts are used mostly where accuracy is of less importance and where the currents are comparatively large.

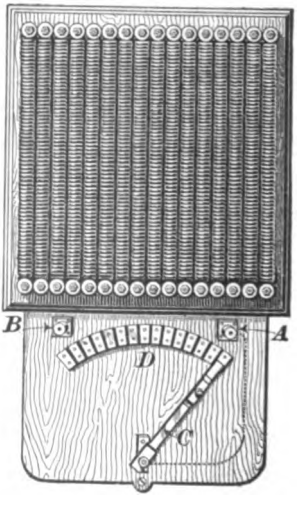

FIG. 37.

Fig. 37 shows a typical form of sliding-contact rheostat. In this particular rheostat, the coils of resistance wire are connected to a row of contact pieces *D*, as shown in the diagram, Fig. 38. The current enters the rheostat through the terminal *A*, passes through the movable arm *C*, and then through all the resistance-coils between the contact piece on which the arm rests and the terminal *B*. When the arm rests upon the first contact piece, as shown by the full lines in this diagram, all of the resistance is said to be *in circuit;* that is, the current passes through all the coils. By moving the arm to the left, towards the terminal *B*, as shown by the dotted lines, the coils connected to the contact pieces which have been passed over by the arm are said to be *cut out* of circuit, and the current passes through the remaining coils only.

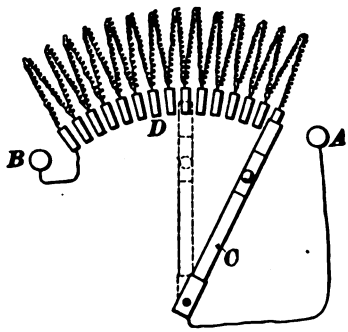

FIG. 38.

52. Rheostats in which the resistance is adjusted by means of removable plugs are employed in laboratory practice, where small currents are used and where great accuracy is required. The resistance-coils in these rheostats are enclosed in a wooden box, and the actual resistance of each coil is carefully determined. A resistance-box offering 10,000 ohms resistance is shown in Fig. 39, the separate coils offering resistances from one ohm up to 5,000 ohms. The operation of adjusting the resistance by means of the removable plugs can be seen from the diagram in Fig. 40. The contact pieces *a*, *b*, *c*, etc., are arranged side by side on the top of the case and are separated from each other by a small air-space. The ends of each contact piece are provided with a tapered recess in such a manner as to allow a metallic plug to be inserted between them and thereby connect the two together electrically. The current passes into the

rheostat by the terminal *A*, and when all the plugs are removed flows consecutively through all the coils *1*, *2*, *3*, *4*, *5*,

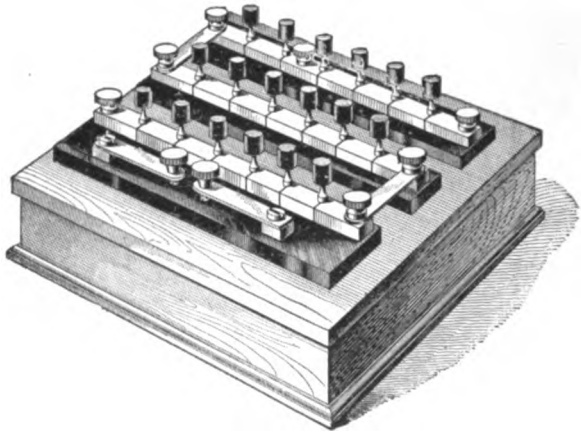

FIG. 39.

and *6* to the terminal *B*. The total resistance of the rheostat can be lowered by inserting the plug *P* between the

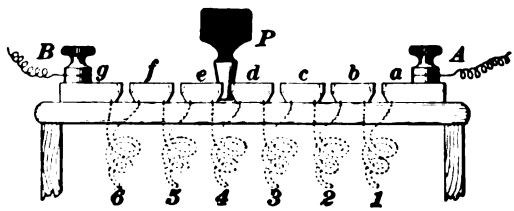

FIG. 40.

contact pieces; this operation *short-circuits*, or *cuts out*, the particular coil connected to the two contact pieces, or, in other words, the current, instead of flowing through the coils, passes directly from one contact piece to the other through the metallic plug.

53. Electrical resistance may be measured by an apparatus called a **Wheatstone bridge.** A bridge, when completed, ready for taking measurements, consists of three main parts: (1) an adjustable resistance-box containing a

number of coils, the exact resistance of each coil being known; (2) a galvanometer for detecting small currents, and (3) a battery of several cells. The coils of the resistance-box are divided into three groups, two of which are called **proportional** or **balance arms,** and the third is known as the **adjustable arm.** Each proportional arm is composed of three and sometimes four coils of 1, 10, 100, and 1,000 ohms resistance, respectively. The adjustable arm contains a large number of coils ranging from .1 ohm up to 10,000 ohms.

The operation of the bridge depends upon the principle of the relative difference of potential between two points in a divided circuit of two branches. The electrical connections of the bridge are shown in the diagram, Fig. 41.

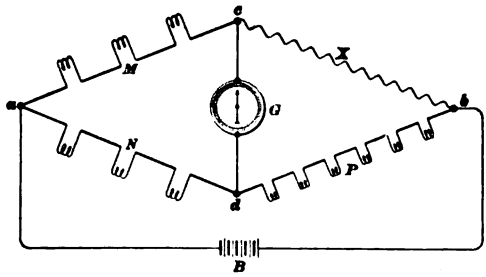

FIG. 41.

M represents the resistance of one of the balance arms, which will be termed for convenience the *upper* balance arm; *N* represents the resistance of the other balance arm, which will be termed the *lower* balance arm; *P* represents the resistance of the adjustable arm, and *X* represents an unknown resistance, the value of which is to be determined. One terminal of the detecting galvanometer *G* is connected at *c*, the junction of the upper balance arm and the unknown resistance; the other terminal is connected at *d*, the junction of the lower balance arm and the adjustable arm. One pole of the battery is connected at *a*, the junction of the two balance arms; the other pole at *b*, the junction of the adjustable resistance and the unknown resistance. The current from the battery divides at *a*, part

of it flowing through resistances M and X, and the rest through N and P. When the resistances M, N, P, and X fulfil the proportion $\frac{M}{N} = \frac{X}{P}$, then the two points c and d will have the same potential, and no current will flow through the galvanometer G. Since the resistances of M, N, and P are known, the resistance of X will be given by the fundamental equation $X = \frac{M}{N} \times P$, when the arms are so adjusted as to cause no deflection of the galvanometer. For example, suppose that the two ends of a copper wire are connected to the terminals b and c, and after adjusting the resistance in the arm so that the galvanometer shows no deflection, the resistances of the different arms read as follows: $M = 1$ ohm, $N = 100$ ohms, and $P = 112$ ohms. Then, substituting these values in the fundamental equation gives

$$X = \frac{M}{N} \times P = \frac{1}{100} \times 112 = 1.12 \text{ ohms.}$$

54. The actual various forms of resistance-boxes used with the bridges differ widely from the diagram, but all are

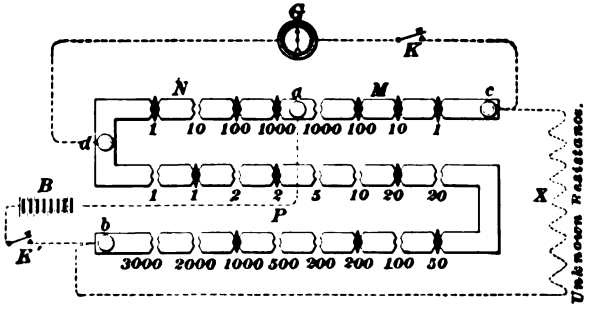

FIG. 42.

based upon this same principle and fundamental equation. A common pattern of resistance-box for this purpose is constructed similar to the adjustable rheostat, as previously described, where the adjustments are made with removable plugs. Ordinarily the contact pieces are arranged in the shape of a letter S, and the galvanometer and battery

circuits are connected as shown in Fig. 42. The position of the two balance arms and the adjustable arm can be readily seen by comparing the connections of the battery and galvanometer circuits with those in the original diagram. K and K' represent keys for opening the circuits when the plugs are withdawn or inserted in varying the resistance or when the bridge is not in use. In this particular case, the 1,000-ohm plug in the upper balance arm is supposed to be drawn, and therefore $M = 1{,}000$ ohms. In the lower balance arm the 10-ohm plug is supposed to be drawn, and therefore $N = 10$ ohms. In the adjustable arm the following plugs are supposed to be drawn: 1, 2, 5, 10, 20, 100, 200, 500, 2,000, and 3,000 ohms; therefore, the resistance P is the sum of these resistances, or 5,838 ohms. If, under these conditions, there is no deflection of the galvanometer when the two keys K and K' are pressed and both circuits are closed, the resistance of X will be 583,800 ohms; for substituting the values of M, N, and P in the fundamental equation gives $X = \frac{M}{N} \times P = \frac{1{,}000}{10} \times 5{,}838 = 583{,}800$ ohms.

Fig. 43 shows a special pattern of resistance-box for a Wheatstone bridge, in which the coils of the adjustable

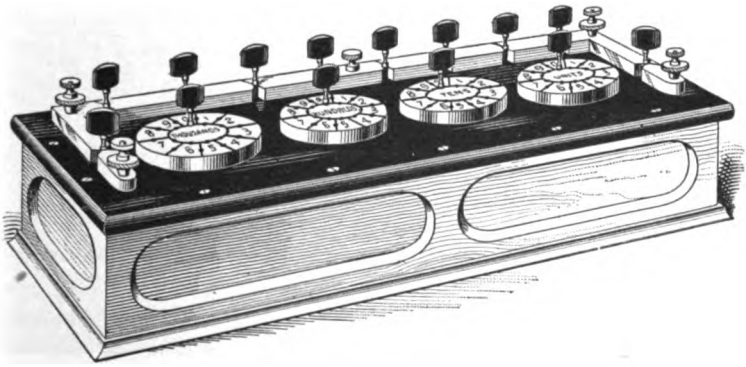

FIG. 43.

arm are arranged in the form of four dials. This pattern is known as the *dial* pattern, and is widely used in making resistance measurements.

EXAMPLE.—The diagram in Fig. 44 represents a particular type of Wheatstone's bridge to which a battery and galvanometer are properly connected for measuring unknown resistances. An unknown resistance x is connected to the terminals A and H; when the plugs a, e, f, g, i, k, m, q, and t are drawn, and when both the contact keys K and K' are pressed, the galvanometer shows no deflection. Determine the resistance of x.

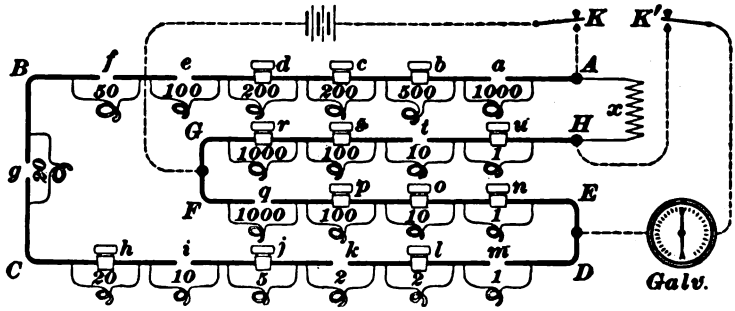

FIG. 44.

SOLUTION.—From the connections of the galvanometer and battery circuits, it will be seen that the resistance-coils in line $G\,H$ represent the upper balance arm M of the bridge; that the coils in the line $E\,F$ represent the lower balance arm N, and that the coils in the lines $A\,B$ and $C\,D$ represent the adjustable arm P. From the fundamental equation of the Wheatstone bridge, X (the unknown resistance) $= \frac{M}{N} \times P$. In this particular case, the plug t in the upper arm is drawn; hence, $M = 10$ ohms; in the lower arm q is drawn; hence, $N = 1{,}000$ ohms; and in the adjustable arm, the plugs a, e, f, g, i, k, and m are drawn; hence, $P = 1{,}000 + 100 + 50 + 20 + 10 + 2 + 1 = 1{,}183$ ohms. Substituting these values in the fundamental equation gives $X = \frac{M}{N} \times P = \frac{10}{1{,}000} \times 1{,}183 = 11.83$ ohms. Ans.

55. The Volt, or the Practical Unit of Electromotive Force.—In mechanics, pressures of all kinds are measured by the *effects* they produce; similarly, in electrotechnics, *potential* is measured by the effect it produces.

It has been shown that electrical potential will cause an electric current to flow against the resistance of a conductor, and also how the units of resistance and current are obtained. It follows that a *unit potential* would be that

electromotive force which would maintain a current of unit strength in a circuit whose resistance is unity. By definition, therefore, the *volt*, or *the practical unit of potential*, is that electromotive force which will maintain a current of *one ampere* in a circuit whose resistance is *one ohm*. With a known resistance in ohms and a known strength of current in amperes, the electromotive force in volts is determined by Ohm's law, Art. **34**; for, by transposing, $E = C\,R$.

This method of determining the potential of a circuit can be readily shown by the following illustration: Suppose, for example, it is desired to determine the electromotive force in volts required to drive a current of 2 amperes through a certain copper wire. In the first place, the resistance of the copper wire is found by Wheatstone's bridge as previously described. For convenience, it is assumed that its resistance is found to be 1.2 ohms. Then the electromotive force E required to drive 2 amperes through the wire will be 2.4 volts; for, by substituting, $E = C\,R = 2 \times 1.2 = 2.4$ volts.

The maximum difference of potential developed by any single voltaic couple placed in any electrolyte is about 2.25 volts; in the common forms of cells, the difference of potential developed averages from .75 to 1.75 volts.

56. When several cells are connected in *series*, the total electromotive force developed will be equal to the sum of the electromotive forces developed by the separate cells; or, if the cells are composed of the same voltaic elements, the total electromotive force developed will be equal to the electromotive force of one cell, multiplied by the number of cells in series. For example, a battery is composed of 12 cells connected in series, and the electromotive force in each cell is 1.5 volts; the total electromotive force of the battery is, therefore, $1.5 \times 12 = 18$ volts.

Connecting cells in *parallel*, or *multiple-arc*, does not increase the electromotive force of a battery; the electromotive force will always be equal to the electromotive force of one cell, no matter how many cells are connected to the

main conductors, provided, of course, that all cells develop equal electromotive forces.

57. Measuring instruments called **voltmeters** have been devised for indicating electromotive forces and differences of potential directly in volts. Principal among these are the *Cardew* and *Weston* voltmeters.

The **Cardew** voltmeter, Fig. 45, depends for its operation upon the linear expansion of a metallic wire when heated by an electric current. The expansion wire *w* is enclosed in a long cylindrical case *a*, and is attached in such a way that its expansion causes a small grooved wheel on the axis of the index needle to revolve in one direction when the wire expands or lengthens, and in the opposite direction when the wire contracts or shortens. The movements of this wheel cause the index *b* to move over the scale. Since the resistance is nearly constant, the current that will flow is proportional to the E. M. F.; the greater the E. M. F. the more the wire will be expanded, and the greater will be the consequent deflection. The resistance of the wire, however, is so large as to permit only a weak current to pass through it when the needle is deflected over the entire scale. A Cardew voltmeter which indicates up to 100 volts has a resistance of about 500 ohms. The circular scale is divided into small divisions, each representing one volt, or fractions, or multiples of one volt.

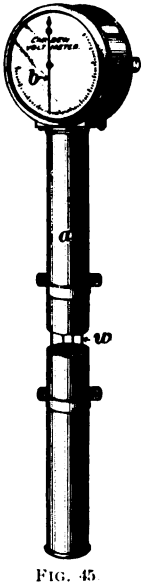

FIG. 45

58. The **Weston** voltmeter, Fig. 46, is based upon the same principles as the Weston ammeter, and in appearance is quite similar to it. Its internal resistance, as in all voltmeters, is exceedingly large; the resistance of a Weston voltmeter for indicating up to 150 volts is about 19,000 ohms, while the resistance of a Weston ammeter, measuring strengths of currents up to 15 amperes, is only .0022 ohm. It will be seen that, owing to the great resistance, the

current passing through a voltmeter is exceedingly small. For example, in the instrument described above, when indicating 150 volts, the current, by Ohm's law, is only $150 \div 19{,}000 = .0079$ ampere. All voltmeters are provided with at least two terminals, or binding-posts, such as p and p', Fig. 46. Connections are made by two separate conductors, called *voltmeter leads*, from these binding-posts to two points between which the difference of potential, or the electromotive force, is to be measured.

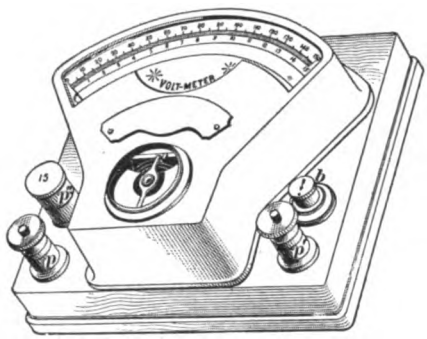

FIG. 46.

The Weston voltmeters usually have a third binding-post p'', which when used with p' corresponds with a second graduated scale situated directly under the main scale, one division of the upper scale having the value of two lower divisions. The majority of voltmeters are also provided with a contact button b, which when pressed closes the circuit and allows the index needle to be deflected by the current. When the pressure upon the button is relaxed, the circuit is opened, and the index needle returns to the zero mark.

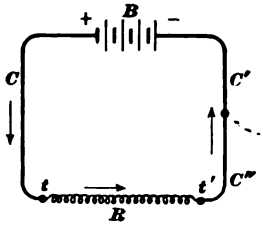

FIG. 47.

59. The methods of connecting voltmeters and ammeters for measuring electromotive forces and currents of various circuits should be thoroughly understood. Suppose, for example, that the terminals of a battery composed of four cells connected in series are connected to an unknown resistance, and it is desired to know the strength of current flowing through the circuit, and also the difference of potential required to drive that current through

the unknown resistance when the only instruments available are an ammeter and a voltmeter. In Fig. 47 let B represent the battery and R the unknown resistance; C, C', and C'' are three large conductors for making necessary connections. With the connections as shown, there is practically a continuous current flowing through the closed circuit, that is, from the battery through the conductors and the unknown resistance. The first step is to determine the strength of this current by the use of an ammeter. Assuming that the battery is constant, that is, that the electromotive force developed in it does not vary, then, so long as the resistance of the circuit is not altered, the strength of the current will remain unchanged and *will be the same in all parts of the circuit*. Hence, if an ammeter be inserted in any part of the circuit, as between C' and C'', Fig. 48, it will measure the total strength of current flowing through the entire circuit. As has been stated, the internal resistance of the ammeter is so small that its insertion makes no appreciable change in the total resistance of the circuit, and therefore does not to any extent affect the current flowing. For convenience, assume that the strength of the current flowing in the circuit is found to be 1.2 amperes. The next operation is to find the electromotive force required to drive a current of 1.2 amperes through the resistance R; or, in other words, to find the difference of potential between the terminals t and t' wnen a current of 1.2 amperes is flowing in the circuit. This is accomplished by connecting the two terminals t and t', Fig. 49, of the unknown resistance R, to the two binding-posts p and p' of the voltmeter $V.\ M.$ by two voltmeter leads l and l'. Any small wires of reasonable length can be used for voltmeter leads, as the current they transmit is exceedingly weak, owing to the extremely high resistance of the voltmeter. After pressing the contact button, assume the needle indicates a potential of 6 volts; this, then, is the

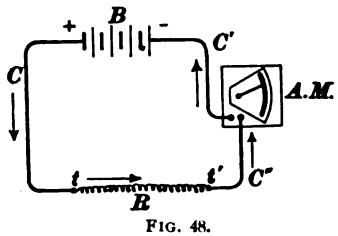

FIG. 48.

electromotive force required to force a current of 1.2 amperes through the unknown resistance R; or, in other words, the difference of potential between the terminals t and t' is 6 volts. From these readings of the current and voltage, and by the application of Ohm's law, the resistance R of the circuit between t and t' can be determined. By algebra, Ohm's law can be transposed from the equation $C = \frac{E}{R}$ to $R = \frac{E}{C}$ and be equally true; this signifies that the resistance R of any conductor, or circuit, is equal to the electromotive force, or the difference of potential E in volts, divided by the strength of current C in amperes, flowing through that circuit or conductor. In the previous case, it has been found that it requires an electromotive force of 6 volts to drive a current of 1.2 amperes through the resistance R; hence, from Ohm's law $R = \frac{E}{C} = \frac{6}{1.2} = 5$ ohms.

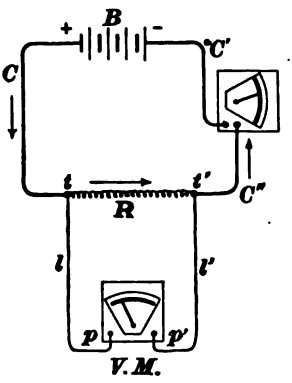

FIG. 49.

APPLICATIONS OF OHM'S LAW

TO CLOSED CIRCUITS.

60. The following facts are to be carefully noted regarding the application of Ohm's law to closed circuits:

The strength of current (**C**) *is the same in all parts of a closed circuit, except in the cases of derived circuits, where the sum of the currents in the separate branches is always equal to the current in the main or undivided circuit.*

The resistance (**R**) *is the resistance of the internal circuit plus the resistance of the external circuit.*

The electromotive force (**E**) *in a closed circuit is the total generated difference of potential in that circuit.*

61. The following formula may be used to determine the strength of current in amperes flowing in a closed circuit when the electromotive force and the total resistance are known:

$$C = \frac{E}{R}, \qquad \textbf{(6.)}$$

where C = current in amperes;
E = electromotive force in volts;
R = resistance in ohms.

That is to say, *the strength of current in amperes is found by dividing the electromotive force in volts by the total resistance in ohms.*

EXAMPLE.—The two electrodes of a simple voltaic cell are connected by a conductor whose resistance is 1.6 ohms. If the internal resistance of the cell is 5 ohms and the total electromotive force developed is 1.75 volts, what is the strength of current flowing in the circuit?

SOLUTION.—Let r_i = the internal resistance and r_e = the resistance of the copper wire. Then, $R = r_i + r_e = 1.6 + 5 = 6.6$ ohms, the total resistance of the circuit. Then, by formula **6**, the current

$$C = \frac{E}{R} = \frac{1.75}{6.6} = .265 \text{ ampere.} \quad \text{Ans.}$$

62. The following formula may be used to find the total resistance in ohms of a closed circuit when the electromotive force and the strength of current are known:

$$R = \frac{E}{C}, \qquad \textbf{(7.)}$$

the letters having the same significance as in formula **6.** By formula **7** it will be seen that *the resistance in ohms of a closed circuit is found by dividing the electromotive force in volts by the current in amperes.*

EXAMPLE.—The total electromotive force developed in a closed circuit is 1.8 volts and the strength of the current flowing is .6 ampere; find the resistance in ohms.

SOLUTION.—By formula **7** the resistance

$$R = \frac{E}{C} = \frac{1.8}{.6} = 3 \text{ ohms.} \quad \text{Ans.}$$

63. The following formula may be used to find the total electromotive force in volts developed in a closed circuit when the strength of current and the total resistance are known:

$$E = CR. \qquad (8.)$$

The letters have the same meaning as in formulas **6** and **7**. We find here that *the electromotive force in volts developed in a closed circuit is obtained by multiplying together the current in amperes and the resistance in ohms.*

EXAMPLE.—The internal resistance of a closed circuit is 2 ohms and the external resistance is 3 ohms; if the current flowing is .4 ampere, what is the electromotive force developed?

SOLUTION.—Let r_i = the internal resistance and r_e = the external resistance. Then, $R = r_i + r_e = 2 + 3 = 5$ ohms. By formula **8**, the electromotive force $E = CR = .4 \times 5 = 2.0$ volts. Ans.

TO DROP, OR LOSS, OF POTENTIAL.

64. Referring again to water flowing in a pipe, it is evident that although the *quantity* of water which passes is the same at any cross-section of the pipe, the *pressure per square inch* is not the same. Even in the case of a horizontal pipe of the same diameter throughout, the water when flowing suffers a *loss* of head or pressure. It is this difference of pressure that causes the water to flow between two points against the friction of the pipe.

This is precisely similar to a current of electricity flowing through a conductor. Though the *quantity of electricity* that flows is equal at all cross-sections, the electromotive force is by no means the same at all points along the conductor. It suffers a loss, or drop, of electrical potential in the direction in which the current is flowing, and it is this difference of electrical potential that causes the electricity to flow against the resistance of the conductor. *Ohm's law* not only gives the strength of the current in a closed circuit, but also the *difference of potential* in volts along that circuit. The difference of potential (E') in volts between any two points along a circuit is equal to the product of the

strength of the current (C) in amperes and the resistance (R') in ohms of that part of the circuit between those two points, or $E' = C R'$, which is an example of the use of formula **8.** E' also represents the *loss*, or *drop*, of potential in volts between the two points. If any two of these quantities are known, the third can be readily found; for, by transposing, $C = \frac{E'}{R'}$ and $R' = \frac{E'}{C}$, as already given in formulas **6** and **7.**

EXAMPLE.—Fig. 50 represents part of a circuit in which a current of 3 amperes is flowing. The resistance from a to b is 1.5 ohms, from b to c is 2.3 ohms, and from c to d is 3.6 ohms. Find the difference of potential between a and b, b and c, c and d, and a and d.

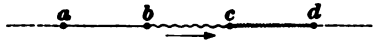

FIG. 50.

SOLUTION.—Since, by formula **8,** $E' = C R'$, then,

the difference of potential between a and $b = 3 \times 1.5 = 4.5$ volts.
" " " " " b and $c = 3 \times 2.3 = 6.9$ "
" " " " " c and $d = 3 \times 3.6 = 10.8$ "
" " " " " a and $d = 4.5 + 6.9 + 10.8 =$ 22.2 volts; or, in other words, the *loss*, or *drop*, of potential caused by a current of 3 amperes flowing between a and d is 22.2 volts.

65. In a great many cases it is desirable to have the current flow from the source a long distance to some electrical receptive device and return without causing an excessive drop, or loss, of potential in the conductors leading to and from the two places. In such circuits, the greater part of the total generated electromotive force is expended in the receptive device itself, and only a small fraction of it is lost in the rest of the circuit. Under these conditions, it is customary to decide upon a certain *drop, or loss, of potential* beforehand, and from that and the current calculate the resistance of the two conductors.

EXAMPLE.—It is desired to transmit a current of 5 amperes to an electrical device situated 500 feet from the source; the total generated E. M. F. is 120 volts, and only $\frac{1}{16}$ of this potential is to be lost in the conductors leading to and from the receptive device. (*a*) Find the resistance of the two conductors, and (*b*) find the resistance per foot of the conductors, assuming each to be 500 feet long.

SOLUTION.—(*a*) $\frac{1}{10}$ of 120 volts = 12 volts, which represents the *drop*, or *loss*, of potential on the two conductors. Let E' = 12 volts; C = 5 amperes, and R' = the total resistance of the two conductors. Then, by formula **7**, $R' = \frac{E'}{C} = \frac{12}{5} = 2.4$ ohms. Ans.

(*b*) The resistance per foot of the conductor is found by formula **1**. In this case, $r_1 = 2.4$ ohms; $l_1 = 1{,}000$ feet; $l_2 = 1$ foot. Then the resistance per foot,

$$r_2 = \frac{2.4 \times 1}{1{,}000} = .0024 \text{ ohm.} \quad \text{Ans.}$$

TO VOLTAIC CELLS.

66. The difference of potential between the two electrodes of a simple voltaic cell when no current is flowing—that is, when the circuit is open—is always equal to the total electromotive force developed within the cell; but when a current is flowing—that is, when the circuit is *closed*—a certain amount of potential is expended in forcing the current through the internal resistance of the cell itself. Hence, the difference of potential between the two electrodes when the circuit is closed is always smaller than when the circuit is open. This difference of potential between the two electrodes when the circuit is closed is sometimes called the *available* or *external* electromotive force, to distinguish it from the *internal* or *total generated* electromotive force.

67. To find the available electromotive force of a cell, let E = the total generated E. M. F.;

E' = *available* E. M. F. when the circuit is closed;

C = the current flowing when the circuit is closed;

r_i = the internal resistance of the cell.

Then, the drop, or loss, of potential in the cell = $C r_i$, and the available electromotive force,

$$E' = E - C r_i. \qquad (9.)$$

The available electromotive force of a cell is equal to the difference between the total generated electromotive force and the potential expended in forcing the current through the internal

resistance of the cell when the circuit is closed. From Ohm's law, this loss, or drop, of potential in the cell itself is equal to the product of the internal resistance in ohms and the strength of the current in amperes flowing through the circuit.

EXAMPLE.—In a voltaic cell, the total generated E. M. F. is 2.2 volts and the internal resistance is .8 ohm. If a current of 1.2 amperes flows through the cell when the circuit is closed, what is the available E. M. F., or, in other words, the difference of potential between the two electrodes?

SOLUTION.—Let E' = the available E. M. F.; E = the total generated electromotive force; C = the current in amperes; and r_i = the internal resistance.

Then, by formula **9**,

$$E' = E - Cr_i = 2.2 - (1.2 \times .8) = 1.24 \text{ volts.} \quad \text{Ans.}$$

TO DERIVED CIRCUITS.

68. In treating upon derived circuits, only that part of the circuit will be considered which is divided into branches and each branch transmitting part of the total current; the rest of the circuit is assumed to be closed through some electric source, as, for instance, a voltaic battery.

Before applying Ohm's law to derived circuits, the word *conductivity* should be thoroughly understood. Conductivity can be defined as the facility with which a body transmits electricity, and is the opposite of resistance. For example, copper is of low resistance and high conductivity; mercury is of high resistance and low conductivity. In other words, conductivity is the inverse or reciprocal of resistance. There is no established unit of conductivity; it is used merely as a convenience in calculations. For example, if the resistance of a circuit is 2 ohms, its conductivity is represented by one-half; if the resistance is increased to 4 ohms, the conductivity would only be one-half as much as in the former case and would be represented by one-quarter.

The **conductivity** of any conductor is, therefore, unity divided by the *resistance* of that conductor; and, conversely,

the resistance of any conductor is unity divided by its conductivity.

69. Fig. 51 represents a derived circuit of 2 branches.

Let r_1 and r_2 = the separate resistances of the two branches; c_1 and c_2 = the separate currents in each branch, respectively, and C = the sum of the currents in the two branches; that is, the current in the main or undivided branch. Then, $c_1 + c_2 = C$, and $C - c_2 = c_1$.

When the current flows from a to b, if the resistances r_1 and r_2 are equal, the current will divide equally between the two branches; thus, if a current of 2 amperes is flowing in the main circuit, one ampere will flow through each branch.

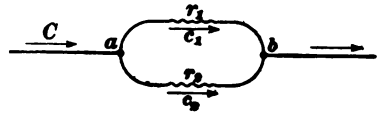

FIG. 51.

When the resistances of the two branches are unequal, the current will divide between them in inverse proportion to their respective resistances. In Fig. 51 the resistances of the two branches are r_1 and r_2. Therefore, $c_1 : c_2 :: r_2 : r_1$.

By algebra, this proportion gives the two following formulas:

For the first branch, $$c_1 = \frac{C r_2}{r_1 + r_2}. \qquad \textbf{(10.)}$$

That is, *of two branches in parallel, dividing from a main circuit, the current in the first branch is equal to the current in the main multiplied by the resistance of the second branch, and the product divided by the sum of the resistances of the two branches.*

For the second branch, $$c_2 = \frac{C r_1}{r_1 + r_2}. \qquad \textbf{(11.)}$$

Of two branches in parallel, dividing from a main circuit, the current in the second branch is equal to the current in the main multiplied by the resistance of the first branch, and the product divided by the sum of the resistances of the two branches.

EXAMPLE.—Suppose the resistance r_1 of the first branch is 2 ohms, and the resistance r_2 of the second branch is 3 ohms, find the separate currents c_1 and c_2 in the two branches, respectively, when the current C in the main or undivided branch is 60 amperes.

SOLUTION.— $r_1 = 2$ ohms, $r_2 = 3$ ohms, and $C = 60$ amperes. To find the current c_1 in the first branch, substitute these values in formula **10,** which will give $c_1 = \frac{C r_2}{r_1 + r_2} = \frac{60 \times 3}{2 + 3} = \frac{180}{5} = 36$ amperes. Ans.

To find the current c_2, in the second branch, substitute these values in formula **11,** which will give

$$c_2 = \frac{C r_1}{r_1 + r_2} = \frac{60 \times 2}{2 + 3} = \frac{120}{5} = 24 \text{ amperes.} \quad \text{Ans.}$$

70. It is clear that two conductors in parallel will conduct an electric current more readily than one alone; that is, their *joint conductivity* is greater than either of their separate conductivities taken alone. This being the case, their resistances must follow the inverse law—viz., the joint resistance of two conductors in parallel must be *less* than either of their separate resistances taken alone.

Rule.—*If the separate resistances of two conductors are equal, their joint resistance when connected in parallel is one-half of the resistance of either conductor.*

For example, take two conductors, the separate resistance of each being 2 ohms, and connect them in parallel; their joint resistance will then be one-half their separate resistance, or 1 ohm.

71. When the separate resistances of two conductors in parallel are unequal, the determination of their joint resistance when connected in parallel involves some calculation.

In Fig. 51, the conductivities of the branches are $\frac{1}{r_1}$ and $\frac{1}{r_2}$. Hence, their joint conductivity when connected in parallel is $\frac{1}{r_1} + \frac{1}{r_2} = \frac{r_2 + r_1}{r_1 r_2}$; now, since the resistance of any conductor is the reciprocal of its conductivity, then

the *joint resistance* of the two branches in parallel is the reciprocal of their joint conductivity; or, $1 \div \frac{r_2 + r_1}{r_1 r_2} = \frac{r_1 r_2}{r_2 + r_1}$. Hence, joint resistance

$$R'' = \frac{r_1 r_2}{r_1 + r_2}. \qquad (12.)$$

That is, *the joint resistance of two conductors connected in parallel is equal to the product of their separate resistances divided by the sum of their separate resistances.*

EXAMPLE.—In Fig. 51, given $r_1 = 2$ ohms and $r_2 = 3$ ohms; find their joint resistance in parallel.

SOLUTION.—From formula **12**, their joint resistance $R'' = \frac{r_1 r_2}{r_1 + r_2} = \frac{2 \times 3}{2 + 3} = \frac{6}{5} = 1\frac{1}{5}$ ohms. Ans.

72. Fig. 52 represents a divided circuit of three branches. Let r_1, r_2, and r_3 be the separate resistances of those branches, respectively. Then, $\frac{1}{r_1}$, $\frac{1}{r_2}$, and $\frac{1}{r_3}$ represent the separate conductivities of the three branches, respectively. Their joint conductivity $= \frac{1}{r_1} + \frac{1}{r_2} + \frac{1}{r_3} = \frac{r_2 r_3 + r_1 r_3 + r_1 r_2}{r_1 r_2 r_3}$. Since the joint resistance is the reciprocal of their joint conductivity, then it is equal to

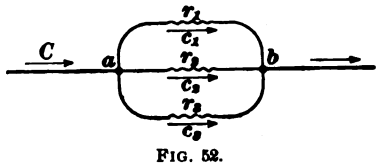

FIG. 52.

$$1 \div \frac{r_2 r_3 + r_1 r_3 + r_1 r_2}{r_1 r_2 r_3} = \frac{r_1 r_2 r_3}{r_2 r_3 + r_1 r_3 + r_1 r_2}.$$

Hence, the joint resistance of three branches in parallel

$$R''' = \frac{r_1 r_2 r_3}{r_2 r_3 + r_1 r_3 + r_1 r_2}. \qquad (13.)$$

That is, *the joint resistance of three or more conductors connected in parallel is equal to the reciprocal of their joint conductivity.*

EXAMPLE.—In Fig. 52, given, $r_1 = 5$ ohms; $r_2 = 10$ ohms; and $r_3 = 20$ ohms; find their joint resistance from a to b.

SOLUTION.—By formula **13**, their joint resistance

$$R''' = \frac{r_1 r_2 r_3}{r_2 r_3 + r_1 r_3 + r_1 r_2} = \frac{5 \times 10 \times 20}{10 \times 20 + 5 \times 20 + 5 \times 10} = \frac{1{,}000}{350} = \frac{20}{7}$$

$= 2\frac{6}{7}$ ohms. Ans.

73. In a derived circuit of any number of branches, the difference of potential between where the branches divide and where they unite is equal to the product of the sum of the currents in the separate branches and their joint resistance in parallel, as will be apparent from consideration of Ohm's law, Art. **34.**

For example, if the currents in the three branches, Fig. 52, are 16, 8, and 4 amperes, respectively, and the joint resistance from a to b is $2\frac{6}{7}$ ohms, then the difference of potential between a and $b = (16 + 8 + 4) \times 2\frac{6}{7} = 28 \times \frac{20}{7} = 80$ volts.

74. The separate currents in the branches of a derived circuit can be determined by finding the difference of potential between where the branches divide and where they unite, and dividing the result by the separate resistance of each branch.

For example, in Fig. 52, assume that the separate resistances of the three branches are 5, 10, and 20 ohms, respectively, and that the difference of potential between a and b is 80 volts. Then, the current in the first branch is $\frac{80}{5} = 16$ amperes; in the second, $\frac{80}{10} = 8$ amperes, and in the third, $\frac{80}{20} = 4$ amperes.

75. The separate resistances of the branches of a derived circuit can be determined by finding the difference of potential between where the branches divide and where they unite, and dividing the result by the separate currents in each branch.

For example, in Fig. 52, assume the difference of potential between a and b to be 80 volts and the currents in the

separate branches to be 16, 8, and 4 amperes, respectively; then, the resistance of the first branch is $\frac{80}{16} = 5$ ohms; of the second, $\frac{80}{8} = 10$ ohms, and of the third, $\frac{80}{4} = 20$ ohms.

EXAMPLE.—Fig. 53 represents a closed circuit, part of which, from a to b, forms a derived, or shunt, circuit of three separate branches A, B, and C in parallel; r_1, r_2, and r_3 represent the separate resistance of the branches, respectively, from a to b; and R' represents the resistance of the rest of the closed circuit from b to a in the direction in which the current is supposed to be flowing, including the internal resistance of the battery K. Let $r_1 = 2$ ohms; $r_2 = 3.2$ ohms; $r_3 = 4.4$ ohms; and $R' = .8$ ohm.

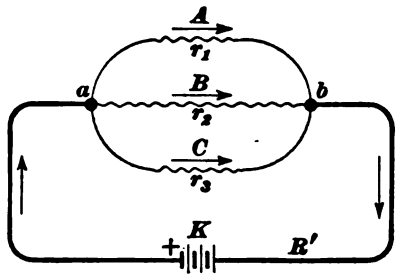

FIG. 53.

If a current of 2 amperes is flowing in the main, or undivided, circuit, find the total electromotive force developed in the battery K.

SOLUTION.—From the application of Ohm's law to closed circuits, formula **8**, $E = C\,R$, where E is the total electromotive force developed within the electric source, C the strength of current flowing, and R the total resistance of the circuit through which the current passes. In this particular problem, the total resistance of the closed circuit will be the *joint* resistance of the three branches in parallel, plus the resistance R' of the rest of the circuit. Hence, first find the joint resistance of the three branches A, B, and C in parallel from a to b. By formula **13**, the joint resistance of three conductors in parallel is $\frac{r_1 r_2 r_3}{r_2 r_3 + r_1 r_3 + r_1 r_2}$, where r_1, r_2, and r_3 represent the separate resistances of the three conductors. Substituting gives

$$\frac{2 \times 3.2 \times 4.4}{3.2 \times 4.4 + 2 \times 4.4 + 2 \times 3.2} = \frac{28.16}{14.08 + 8.8 + 6.4} = \frac{28.16}{29.28} = .9617 \text{ ohm},$$

the joint resistance of the three branches A, B, and C in parallel from a to b. The total resistance of the closed circuit is, therefore, $.9617 + .8 = 1.7617$ ohms, and $E = C \times R = 2 \times 1.7617 = 3.5234$ volts. Ans.

ELECTRICAL QUANTITY.

76. The rate of flow of liquids is expressed in units of quantity per second or minute, and similarly the strength of an electric current can be defined as a quantity of

electricity flowing per second. The practical unit of *electrical quantity* is called the **coulomb.**

The coulomb is such a quantity of electricity as will pass in one second through a circuit in which the strength of current is one ampere.

As stated in Art. **35,** the *quantity* of electricity is calculated from the strength of current; it can not be actually measured. For example, suppose the strength of current in a closed circuit to be 10 amperes, as measured by an ammeter; if such a current flows for only one second, the quantity of electricity which has passed around the circuit is 10 coulombs; but if the current flows for two seconds, the quantity of electricity would be 20 coulombs.

Hence, to calculate the quantity of electricity which has passed in a circuit in a certain time when the strength of the current in amperes is known:

Let Q = the quantity of electricity in coulombs, C the strength of current in amperes, and t the time in seconds.

$$\text{Then, } Q = C\,t. \qquad \textbf{(14.)}$$

If any two of these quantities are known, the third can be readily found. By transposition, $C = \frac{Q}{t}$ and $t = \frac{Q}{C}$.

Therefore, to obtain the quantity of current which has passed through a circuit in a given time, *multiply the strength of current in amperes by the time in seconds.*

EXAMPLE.—Find the quantity of electricity in coulombs that flows around in a closed circuit in 1½ hours when the strength of current is 12 amperes.

SOLUTION.—Reducing the time to seconds gives $1.5 \times 60 \times 60 = 5{,}400$ seconds; hence, $t = 5{,}400$ seconds and $C = 12$ amperes. Then from formula **14,** $Q = C\,t = 12 \times 5{,}400 = 64{,}800$ coulombs. Ans.

ELECTRICAL WORK.

77. When an electric current flows from a higher to a lower potential, *electrical energy* is expended and *work* is done by the current. The principle of the *conservation of energy* teaches that energy can never be destroyed; it follows,

therefore, that if energy has to be expended in forcing a quantity of electricity against a certain amount of resistance, the equivalent of that energy must be transformed into some other form. This other form is usually *heat;* that is, when a quantity of electricity flows against the resistance of a conductor, a certain amount of *electrical* energy is transformed into *heat* energy.

The actual amount of heat developed is an exact equivalent of the *work done* in overcoming the resistance of the conductor, and varies directly as that resistance. For example, take two wires, the resistance of one being twice that of the other, and send currents of equal strengths through each. The amount of heat developed in the wire of higher resistance will be twice that developed in the wire offering the lower resistance.

The unit used to express the amount of mechanical work done is known as the *foot-pound.* The work done in raising any mass through any height is found by multiplying the weight of the body lifted by the vertical height through which it is raised; similarly, the practical unit of *electrical work* is that amount accomplished when a unit quantity of electricity, *one coulomb*, flows between potentials differing by *one volt.*

The unit of electrical work is, therefore, the *volt-coulomb*, and is called the **joule.**

1 *joule* = .7373 foot-pound.

78. By means of the following formulas, we may find directly the amount of electrical work accomplished in *joules* during a given time in any circuit:

Let J = electrical work in joules;
C = current in amperes;
t = time in seconds during which the current flows;
E = potential, or E. M. F., of circuit;
R = resistance of circuit.

When the current and electromotive force are known,

$$J = CEt. \qquad \textbf{(15.)}$$

When the current and resistance are known,

$$J = C^2 R t. \qquad \textbf{(16.)}$$

When the resistance and electromotive force are known,

$$J = \frac{E^2 t}{R}. \qquad \textbf{(17.)}$$

To determine, therefore, the electrical work done in a given time, *multiply the quantity of electricity in coulombs which has passed in the circuit during that time by the loss, or drop, of potential as measured directly, or as computed from the values of the current and resistance.*

EXAMPLE.—Find the amount of work done in joules when a current of 15 amperes flows for ½ an hour against a resistance of 2 ohms.

SOLUTION.—Reducing the time to seconds gives $30 \times 60 = 1{,}800$ seconds $= t$. The current $= C = 15$ amperes, and the resistance $= 2$ ohms $= R$. Then, by formula **16**, the electrical work done

$$J = 15 \times 15 \times 2 \times 1{,}800 = 810{,}000 \text{ joules.} \quad \text{Ans.}$$

79. When the work in joules is known, the work in foot-pounds

$$\text{F. P.} = .7373\, J. \qquad \textbf{(18.)}$$

That is, *the equivalent work done in foot-pounds is obtained by multiplying the number of joules by .7373.*

EXAMPLE.—Express the work done in foot-pounds in a circuit when a current of 8 amperes flows for 2 hours between potentials differing by 10 volts.

SOLUTION.—Reducing the time to seconds gives $2 \times 60 \times 60 = 7{,}200$ seconds $= t$. The current $= 8$ amperes $= C$, and the electromotive force $= 10$ volts $= E$. Then, by formula **15**, the electrical work done $= J = 8 \times 10 \times 7{,}200 = 576{,}000$ joules. Expressed in foot-pounds, this will be, by formula **18**,

$$\text{F. P.} = .7373 \times 576{,}000 = 424{,}684.8 \text{ foot-pounds.} \quad \text{Ans.}$$

ELECTRICAL POWER.

80. Power, or *rate of doing work*, is found by dividing the amount of work done by the time required to do it. In mechanics, the unit of power is called the **horsepower**; in electrotechnics, the unit of power is the **watt.** It is

found by dividing the amount of electrical work done by the time required to do it.

Let E = the electromotive force in volts; Q the quantity of electricity in coulombs; C the current in amperes; and W the power in watts.

By formula **15**, the amount of electrical work $J = CEt$. Then,

$$W = \frac{CEt}{t} = CE. \qquad (19.)$$

The power in watts is equal to the strength of current in amperes, multiplied by the electromotive force in volts.

EXAMPLE.—What is the power in watts developed in a closed circuit in which a current of 12 amperes is flowing between potentials differing by 25 volts?

SOLUTION.— $E = 25$ volts and $C = 12$ amperes. Hence, by formula **19**,

$$W = CE = 12 \times 25 = 300 \text{ watts.} \quad \text{Ans.}$$

By taking into consideration the resistance of the circuit, the equation for determining the power in watts may be expressed in two other ways:

By derivation from formula **16**,

$$W = \frac{C^2 Rt}{t} = C^2 R. \qquad (20.)$$

That is, *the power in watts is equal to the strength of current in amperes squared, multiplied by the resistance in ohms.*

EXAMPLE.—Find the power in watts in a closed circuit in which a current of 30 amperes is flowing against a resistance of 3 ohms.

SOLUTION.— $C = 30$ and $R = 3$. Hence, by formula **20**,

$$W = C^2 R = 30^2 \times 3 = 2{,}700 \text{ watts.} \quad \text{Ans.}$$

By derivation from formula **17**,

$$W = \frac{E^2 t}{Rt} = \frac{E^2}{R}. \qquad (21.)$$

That is, *the power in watts is the quotient arising from dividing the electromotive force in volts squared, by the resistance in ohms.*

EXAMPLE.—The drop of potential in a closed circuit when a current is flowing is 20 volts and the resistance is 10 ohms; what is the power in watts expended?

SOLUTION.— $E = 20$ volts and $R = 10$ ohms. Hence, by formula **21**,

$$W = \frac{E^2}{R} = \frac{20^2}{10} = 40 \text{ watts.} \quad \text{Ans.}$$

81. One watt equals $\frac{1}{746}$ of a horsepower; or, one horsepower equals 746 watts.

If H. P. = horsepower,

$$\text{H. P.} = \frac{W}{746}. \qquad \textbf{(22.)}$$

That is, *to express the rate of doing electrical work in horsepower units, find the number of watts and divide the result by 746.*

The horsepower may also be expressed by three other equations, by expressing the watts in terms of electromotive force, current, and resistance, as obtained from formulas **19, 20, 21,** viz.:

$$\text{H. P.} = \frac{EC}{746}; \quad \text{H. P.} = \frac{C^2R}{746}; \text{ and H. P.} = \frac{E^2}{746R}.$$

EXAMPLE.—Given, current = 50 amperes and electromotive force = 250 volts; express the power directly in horsepower units.

SOLUTION.— $E = 250$ volts; $C = 50$ amperes; hence, H. P. $= \frac{EC}{746} = \frac{250 \times 50}{746} = 16.756$ horsepower. Ans.

EXAMPLE.—Given, strength of current = 25 amperes and resistance = 14.92 ohms; express the power directly in horsepower units.

SOLUTION.— $C = 25$ amperes; $R = 14.92$ ohms; hence,

$$\text{H. P.} = \frac{C^2R}{746} = \frac{25^2 \times 14.92}{746} = 12.5 \text{ horsepower.} \quad \text{Ans.}$$

EXAMPLE.—Given, electromotive force = 110 volts and resistance = 4 ohms; express the power directly in horsepower units.

SOLUTION.— $E = 110$ volts; $R = 4$ ohms; hence, H. P. $= \frac{E^2}{746R} = \frac{110^2}{746 \times 4} = 4.055$ horsepower. Ans.

82. To express the power in watts when the horsepower is known, use the following formula:

$$W = \text{H. P.} \times 746. \qquad \textbf{(23.)}$$

That is to say, *the power in watts is found by multiplying the horsepower by 746.*

EXAMPLE.—Express the equivalent of 4.35 horsepower in watts.

SOLUTION.— H. P. $= 4.35$; by formula **23**, the electrical power $W = 4.35 \times 746 = 3{,}245.1$ watts. Ans.

DYNAMOS AND MOTORS.

(PART 2.)

ELECTROMAGNETIC INDUCTION.

1. It has been shown that an electric current circulating around a coiled conductor produces lines of force which thread through the coil, entering at one end and leaving at the other. So long as the current in the coil remains at a constant strength, the lines of force have direction and position only; unless influenced by some exterior magnetic substance, they do not increase or diminish in number, or change their position relatively to the coil. Fig. 1 represents such a coil around which a current is flowing from the battery *B*. Suppose the battery is disconnected from the coil and a galvanometer for detecting small currents is inserted in its place. A magnetic pole suddenly thrown into the coil, as represented in Fig. 2, will cause a deflection of the galvanometer needle; the needle, however, will return to its original position as soon as the magnet comes to rest. Withdrawing the magnet from the coil also causes a deflection of the needle, but in the opposite direction. In the first case, a momentary current is induced in the circuit, as

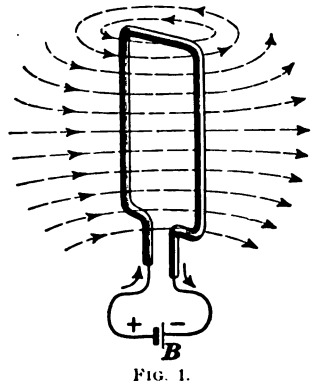

FIG. 1.

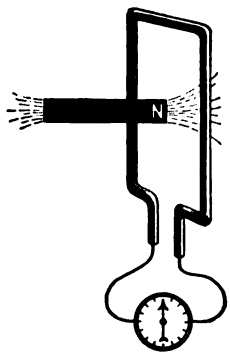

FIG. 2.

shown by the deflection of the galvanometer needle while the magnet is being inserted into the coil; this current immediately subsides when the magnet ceases to move. In the second case, the same effects are produced, with the exception that the current induced in the coil flows in an opposite direction to that in the first case.

These induced currents are caused by a change in the number of lines of force which pass through the coil. In passing into or out of the coil, the lines of force from the magnet set up an E. M. F. in that portion of the conductor in which the number of lines of force is changing, and this E. M. F. tends to send a current through the circuit.

2. In place of a small magnetic pole, imagine the coil to be suddenly inserted into a large uniform magnetic

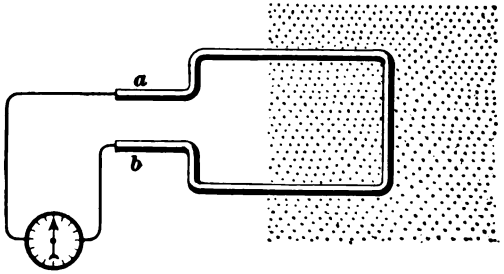

FIG. 3.

field where all the lines of force are parallel to one another. The diagram, Fig. 3, represents a cross-sectional view of such a field. The dots represent the ends of the lines of force; their direction is assumed to be downwards, piercing the paper; or, in other words, the observer is looking along the lines of force towards the face of a south magnetic pole. As the coil enters the magnetic field with its plane at right angles to the lines of force, a current will be induced in the coil and the galvanometer needle will be deflected; this induced current is produced by a change in the number of lines of force which pass through the coil, as in the previous case. Withdrawing the coil from the magnetic field will also induce a current in the circuit, but it will deflect the

galvanometer needle in an opposite direction, showing that the current in the circuit is reversed.

If the coiled conductor be straightened out, forming one long conductor, and then moved across the magnetic field at right angles to the lines of force, as represented in Fig. 4, a current will be generated in the circuit. The current, however, immediately subsides when the motion ceases, no matter whether the conductor is in the magnetic field or otherwise. Should the conductor be moved in the magnetic field, with its length parallel to the lines of force, as in Fig. 5, no current will be generated in the circuit. From these two experiments the following principle is deduced: *When a conductor is moved across a magnetic field so that it cuts the lines of force, an E. M. F. is generated which tends to send a current through that conductor.*

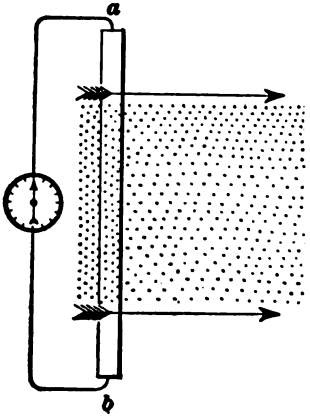

FIG 4.

3. In reality, currents generated in a conductor *cutting* lines of force, and those *induced* in a coiled conductor by a change in the number of lines of force which pass through the coil, are due to the same movement; for every conductor conveying an electric current forms a closed coil, and every line of force is a complete magnetic circuit by itself. Consequently, when any part of a closed coil is cutting lines of force, the lines of force are passing through the coil in a definite direction and changing at the same rate as the cutting. For example, in Fig. 6 the heavy loop *C. C.* represents a closed coil, and the light loop *L. F.* represents four

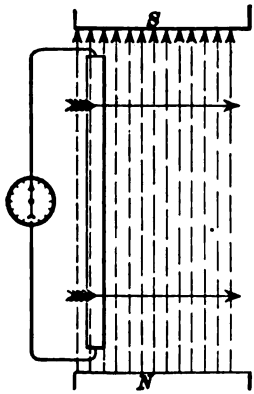

FIG. 5.

lines of force. When the two closed loops are brought together, the closed coil is cut at one place *a* by four lines of force, and at the same time the number of lines of force passing through the closed coil increases from nothing to four. In calculations, however, it is convenient to make a distinction between the two cases: in the one case, to consider that the current is *generated* by a conductor of a certain length *cutting* lines of force at right angles; and in the other, to consider that the current in a closed coil is *induced* by a *change* in the number of lines of force passing through the coil.

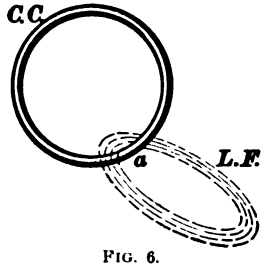

FIG. 6.

In these explanations, it must not be forgotten that an electric current is the result of a difference of potential or electromotive force. Consequently, it is not actually a current that is generated in the moving wire, but an electromotive force; for, in all of the previous experiments in which currents are induced or generated in a conductor by the lines of force, if the circuit is opened at any point, no current will flow, but the electromotive force still exists.

4. There are three methods of producing an electromotive force by induction in a coiled conductor; namely, by *electromagnetic induction*, by *self-induction*, and by *mutual induction*.

In **electromagnetic induction,** the change in the number of lines of force which pass through the coil is due to some relative movement between the coil and a magnetic field; as, for example, by thrusting a magnet into the coil or withdrawing it, or, again, by suddenly inserting the coil into a magnetic field with its plane at right angles to the lines of force.

5. In **self-induction,** the change in the number of

lines of force is caused by sudden changes in a current which is already flowing through the coil itself and is supplied from some exterior source. This exterior current produces a magnetic field in the coil, and so long as the strength of the current remains constant, there is no change in the number of lines of force which pass through the coil. But if the strength of the current is suddenly increased, a change in the number of lines of force occurs; the change in turn *induces* an electromotive force in the conductor, which *opposes* the original current in the coil and tends to keep the current from rising. Its action is similar to that which would take place if some extra resistance were suddenly inserted into the circuit at the instant the strength of the current is increased. The original current eventually reaches its maximum strength in the coil as determined by Ohm's law, but its rise is not instantaneous; it is retarded to a certain extent by this induced electromotive force. If, on the contrary, the strength of the original current is suddenly allowed to decrease, another change is produced in the lines of force which pass through the coil; this new change induces an electromotive force in the coil which acts in the *same* direction as that of the original current and tends to keep it from falling. As in the previous case, however, the original current will eventually drop to its minimum strength, as determined by Ohm's law, but it will fall gradually, and a fraction of a second will elapse before it becomes constant. In short, the current flowing through a coiled conductor acts as if possessing *inertia;* any sudden change in the strength of the current produces a corresponding electromotive force which opposes that change and tends to keep the current at a constant strength.

6. In **mutual induction,** two separate coiled conductors, one conveying a current of electricity, are placed near each other, so that the magnetic circuit produced by the one in which the current flows is enclosed by the other, as shown in Fig. 7, where the current circulates around the coil P when the circuit is closed at key b. The coil P is

called the **primary, or exciting, coil;** the other coil *S* is the **secondary coil.**

Any sudden change in the strength of the current circulating around the primary coil, as, for instance, breaking the circuit at *b*, produces a corresponding change in the number of lines of force in the magnetic circuit which passes through both coils, and hence an electromotive force is induced in the secondary coil. If the primary circuit is completed at *b* and the current tends to rise in that coil, the electromotive force induced in the secondary coil causes a current to circulate around in it in the *opposite* direction to the current in the primary coil. If, on the contrary, the circuit at *b* is suddenly opened and the current in the primary decreases, the induced electromotive force in the secondary causes a current to circulate around in it in the *same* direction as the current in the primary coil.

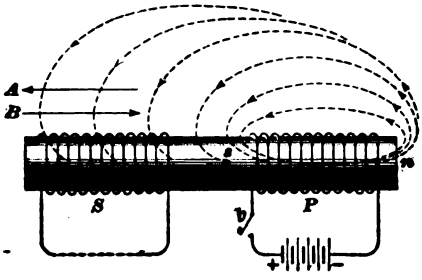

FIG. 7.

To make this clear, in Fig. 7, suppose the current in the primary coil to be suddenly established by closing the switch at *b*. The lines of force will surround the conductors and spread out in all directions. The lines of force spreading out in the direction of arrow *A* cut the conductors of the secondary coil. The resulting current in the secondary would have the same direction were the lines of force stationary, as shown, and the coil *S* moved along the core in the direction of arrow *B*. Then, according to the thumb-and-finger rule, Art. **8,** the current will flow in the secondary coil as indicated by the arrows, or opposite to that in the primary. Similar reasoning will show that when the primary circuit is broken and the lines of force collapse, the direction of the current in the secondary coil *S* will be the *same* as that which existed in the primary.

7. The direction of an induced current in a coil depends upon the direction of the lines of force in the coil, and whether their number is increasing or diminishing. If these two facts are known, the direction in which the current circulates around the coil is determined by the following rule:

Rule.—*If the effect of the action is to diminish the number of lines of force that pass through the coil, the current will circulate around the coil in the direction of the movement of the hands of a watch as viewed by a person looking along the magnetic field in the direction of the lines of force; but if the effect is to increase the number of lines of force that pass through the coil, the current will circulate around in the opposite direction.*

For example, in the diagram, Fig. 3, when the coil is inserted into the magnetic field, thereby *increasing* the number of lines of force which pass through the coil, the current circulates from *b* around the coil to *a*, and thence through the galvanometer to *b* again; when the coil is withdrawn and the number of lines *diminishes*, the current circulates in the opposite direction, that is, from *a* around the coil to *b*, and thence through the galvanometer to *a* again. That end of the coiled conductor *from* which the current flows *to* the external circuit, as from *a* through the galvanometer, in the first case, is the *positive* pole or terminal of the coil; in the second case, *b* is the *positive* pole or terminal.

8. Referring to the straight conductor in which a current is generated by moving it across a magnetic field at right angles to the lines of force, the direction of the current in the conductor depends upon the relation of the direction of the lines of force to that of the moving conductor. The conductor must necessarily be moved across the magnetic field at some angle to the lines of force, and the current generated in the conductor will tend to flow at right angles to the lines of force and at right angles to the direction in which the conductor is moving. In Fig. 4, if the conductor

is moved from left to right across the lines of force, the current generated in it will tend to flow upwards through the conductor; that is, from *b* to *a* through the conductor, then from *a* to *b* through the galvanometer. If the conductor is moved in the opposite direction, that is, from right to left, the current in the conductor will tend to flow in a reversed direction, that is, from *a* to *b* through the conductor and from *b* to *a* through the galvanometer. A convenient method for remembering the direction of a current generated in a straight conductor, when the conductor is moved in a magnetic field at right angles to the lines of force, is as follows:

Rule.—*Place thumb, forefinger, and middle finger of the right hand so that each will be perpendicular to the other two; if the forefinger points in the direction of the lines of force and the thumb points in the direction towards which the conductor is moving, then the middle finger will point in the direction towards which the current generated in the conductor tends to flow.*

For example, in Fig. 8, if a vertical conductor be moved across the front of the north pole *N* of the magnet in the direction towards which the thumb points, the current generated in the conductor will flow downwards, that is, in the direction towards which the middle finger is pointing.

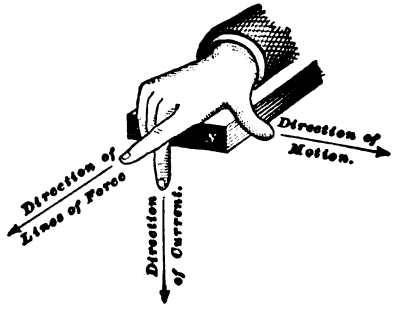

FIG. 8.

The summary of these electromagnetic induction experiments can be stated as follows: *Electromotive forces are generated in a conductor moving in a magnetic field at right angles to the direction of the lines of force, or are induced in a coiled conductor when a change occurs in the number of lines of force which pass through the coil.*

PHYSICAL THEORY OF THE DYNAMO.

9. In Fig. 9, a rectangular coil of copper wire is placed in the center of a uniform field with its plane lying perpendicular to the lines of force; in this position, the coil encloses the greatest number of lines of force. A voltmeter *V. M.* for measuring small E. M. F.'s is connected to the two ends of the coil, as shown in the diagram. The circuit in the voltmeter is kept closed, and any E. M. F. generated in the conductor will be indicated by the deflection of the index needle. So long as the coil remains at rest in the magnetic field no E. M. F. is generated; but imagine the coil to be rotated on an axis in its own plane, such as represented by the broken line *m n*, in the direction indicated by the curved arrows. As the coil starts to rotate, its sides *c d* and *e f* begin to cut the lines of force at right angles, thus generating an E. M. F. in each side. From the rule stated in Art. **8**, the E. M. F. generated in the upper side tends to cause a current to flow from *f* to *e*; and in the lower side, the current tends to flow from *d* to *c*. Hence, the E. M. F.'s generated in the two coils are added together, and the total E. M. F. generated by the coil is indicated by the *V. M.* between *a* and *b*, the end *b* forming the *positive* terminal of the coil. If the coil is rotated at a uniform angular velocity, that is, if the speed of rotation is constant throughout each revolution, the deflection of the voltmeter becomes greater as the coil revolves from its vertical position until it passes through one-quarter of a revolution and reaches a position where its plane lies parallel to the lines of force.

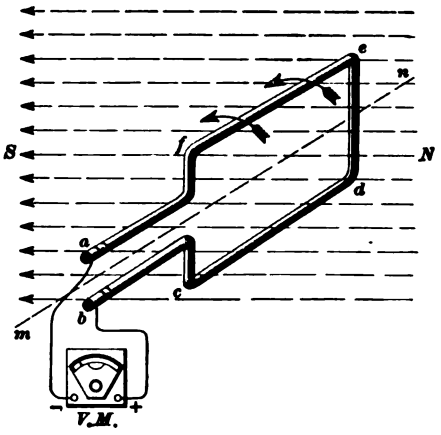

FIG. 9.

10. The diagram, Fig. 10, represents an end view of the coil in two positions: position *1*, as shown by the dotted lines, represents the coil standing vertically at the moment of starting, and position *2*, as shown by the full lines, represents the coil lying horizontally after passing through one-quarter of a revolution. The deflection of the needle, if read at frequent intervals during this quarter of a revolution, gradually increases, beginning at zero in position *1*, and reaching a maximum at position *2*. The gradual rise of the E. M. F. in the circuit while the coil is revolving from position *1* to position *2* can be graphically shown by means of cross-section paper, Fig. 11. The horizontal divisions represent equal intervals of time, and the sum of the divisions between *A* and *B* is the total time occupied by the coil in revolving one-quarter of a revolution; the vertical divisions represent E. M. F., and the sum of the divisions between *A* and *Y* is the total E. M. F. that is being generated in the coil when it is passing through position *2*. The vertical distances between the line *A B* and the curved line represent the E. M. F. which is being generated in the coil at every instant during its rotation between positions *1* and *2*. For example, let each vertical division represent 2.5 volts; then, the distance between *A* and *Y* represents 10 volts. When the coil has revolved one-third of the distance between positions *1* and *2*, Fig. 10, it has consumed one-third of the time; hence, at this instant the E. M. F. that is being generated

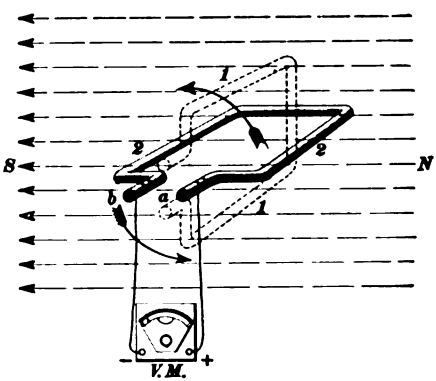

Fig. 10.

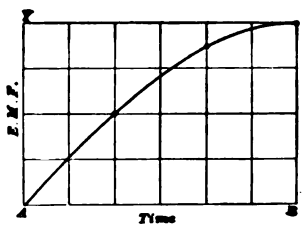

Fig. 11.

in the coil is represented by the number of divisions between the line *A B* and the curved line, at one-third the distance towards *B*, which equals two divisions; or $2 \times 2.5 = 5$ volts. When the coil travels two-thirds the distance between positions *1* and *2*, the E. M. F. that is being generated at that instant is represented by the number of divisions between the line *A B* and the curved line at two-thirds the distance towards *B*, which equals about 3.48 divisions, or $3.48 \times 2.5 = 8.7$ volts.

11. After the coil passes through position *2*, the E. M. F. that is being generated begins to diminish, and by the time the coil has revolved one-half of a revolution and is once more in a vertical position, the E. M. F. falls to zero again. The E. M. F. that is being generated at every instant during one-half of a revolution can be shown by a continuation of the curve on cross-section paper, Fig. 12. The sum of the divisions between *A* and *C* represents the total time occupied by the coil in rotating one-half of a revolution. It will be seen that the maximum E. M. F. that is being generated at any instant is at position *2*, Fig. 10, which corresponds to *B*, Fig. 12. In this position the plane of the coil lies parallel to the lines of force, and its

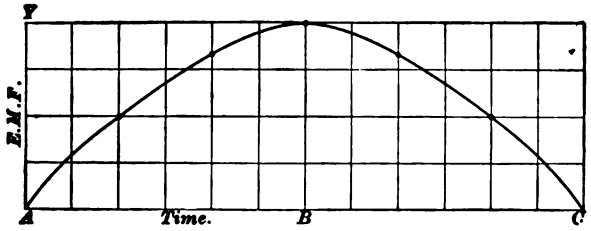

FIG. 12.

sides, corresponding to *c d* and *e f*, Fig. 9, are cutting the lines of force at exactly right angles. The sides of the coil at the moment of passing through this position are cutting more lines of force for equal intervals of time than in any other position during the first half of a revolution.

From this fact the following principle is deduced: *The E. M. F. generated in a moving conductor cutting lines of*

force at right angles is directly proportional to the rate of cutting. Suppose, for example, that a magnetic field contains 100,000 lines of force, and that a conductor is moved across the field at right angles in such manner as to cut every line of force. If the time occupied by the conductor in passing across the field is one second, then the rate of cutting is 100,000 lines per second; or, if it occupied two seconds, the rate of cutting is 50,000 lines per second, and so on. The E. M. F. generated in the former case is twice as great as that generated in the latter. The method for determining the number of lines of force in a magnetic field will be described later.

12. Fig. 13 shows the coil after being rotated one half of a revolution. As soon as the coil starts on the last half of the revolution, its sides *c d* and *e f* cut a few lines of force, and, consequently, an E. M. F. is generated in each side. The E. M. F., however, tends to cause a current to flow in the coil in an opposite direction to that which tends to flow during the first half of the revolution. For, by applying the rule in Art. **8**, the E. M. F. generated in the sides tends to cause a current to flow from *c* to *d* and from *e* to *f*; the end *a* of the coil, which in the first half of the revolution was the negative terminal of the coil, now forms the positive terminal. Hence, in order to allow the current to enter the positive binding-post of the voltmeter, the connections must be reversed.

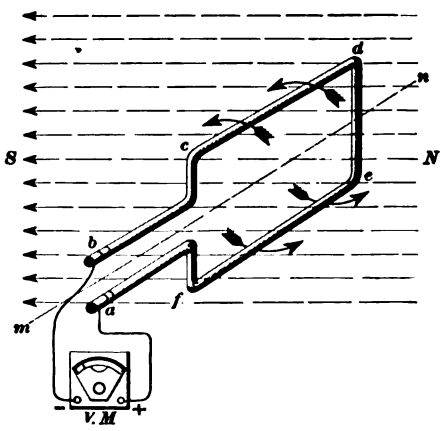

FIG. 13.

The E. M. F. that is generated as the coil is rotated through the last half of

the revolution gradually rises as in the first half, reaching a maximum height when the plane of the coil lies parallel to the lines of force, and afterwards falling to zero again as the

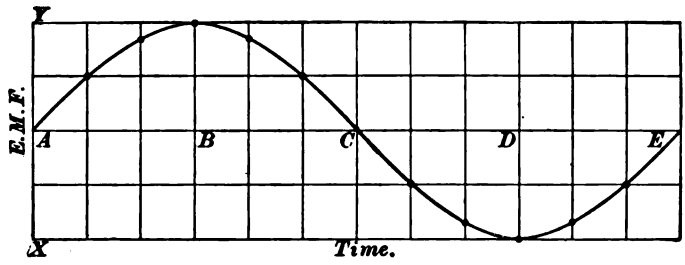

FIG. 14.

coil reaches a vertical position. In Fig. 14, the E. M. F. that is generated in the coil at every instant during one complete revolution is graphically shown by the use of the cross-section paper. The sum of the divisions between *A* and *E* represents the time occupied by the coil in making one complete revolution; the divisions between *A* and *Y* represent the E. M. F. which tends to send a current in one direction through the coil as in the first half of the revolution, and the divisions between *A* and *X* represent the E. M. F. which tends to send a current through the coil in an opposite direction as in the last half of the revolution. The divisions between the curved line and the line *A E*, or **base line,** give the E. M. F. that is being generated in the coil at any instant during the revolution, and the direction in which the E. M. F. tends to act depends upon whether this E. M. F. falls above or below the base line *A E*. For convenience, let the direction in which the E. M. F. tends to act in the first half of the revolution be called the **positive (+) direction,** and in the last half the **negative (−) direction.** For example, the E. M. F. that is generated in the coil when it has revolved three-quarters of a revolution is represented by the distance between *D* and the curved line, which, in this case, is two divisions; and since these divisions are below the base line, the direction in which this E. M. F. tends to act is negative.

13. In Fig. 15, instead of connecting the external circuit directly to the ends of the coil, suppose the wires *o* and *p* to be brought to two brushes *r* and *s*, which lie in a

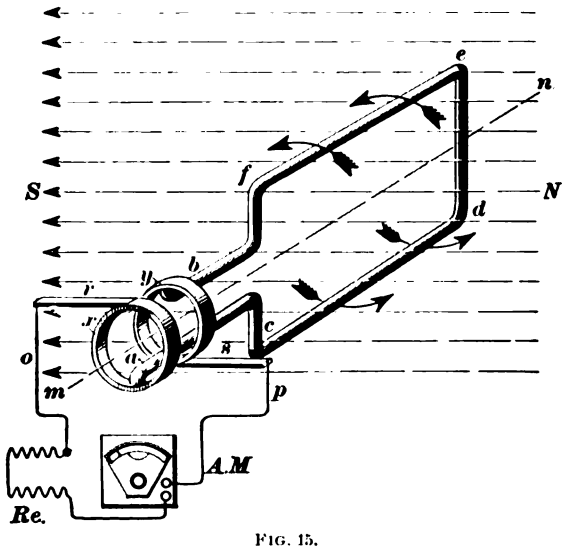

FIG. 15.

horizontal position and bear on the two *collector rings* *x* and *y*, respectively. These collector rings, it will be seen, are connected to the two ends of the coil; *x* to *a* and *y* to *b*.

The resistance of the entire circuit, including the coil, ammeter, collector rings, and brushes, is comparatively small; hence, any E. M. F. generated in the coil causes a corresponding current to flow through the circuit, and its strength is indicated by the ammeter *A. M.* When the coil begins to revolve, a feeble E. M. F. is generated in it as previously described. This E. M. F. causes a corresponding current to flow through the circuit in a positive direction; as the E. M. F. becomes larger, the strength of current in the circuit becomes greater, and *vice versa*. After the coil is rotated one half of a revolution, and the direction in which the E. M. F. tends to act becomes negative, the direction of the current in the circuit is also reversed. If

there is no self-induction to retard the rise and fall of the current in the circuit, as explained in Art. **5**, the strength of the current in the circuit at any instant is exactly proportional to the E. M. F. that is being generated in the coil at that moment; for, according to Ohm's law, the strength of current in any circuit is equal to the E. M. F. generated in that circuit, divided by its resistance. The rising and falling and also the reversing of the current in all parts of the circuit for each revolution, therefore, can be represented graphically on cross-section paper in the same manner as previously described for the E. M. F. Fig. 16

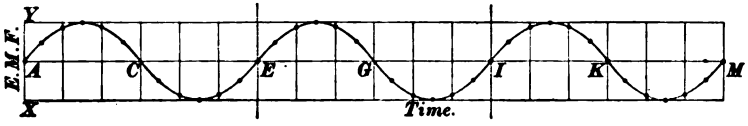

FIG. 16.

represents the rising, falling, and reversing of the current in the circuit for three complete and consecutive revolutions of the coil; the divisions between *A* and *E*, *E* and *I*, and *I* and *M* represent the time of each revolution, respectively. The divisions between the base line *A M* and the curved line above the base line represent the strength of current in the circuit when the direction of flow is positive, and those below represent the strength of current when the direction of flow is negative. Revolving the coil, therefore, at a constant speed generates a current in the circuit, which, in every complete revolution, rises gradually to a maximum strength and falls to zero in one direction, then is reversed, and the same effect is produced in the opposite direction. In other words, the current in the circuit *alternates* from one direction to the opposite direction in each revolution.

An electric current of this character flowing through a circuit is termed an **alternating current.**

14. The next step is to demonstrate the principle of changing, or *commuting*, this alternating current into a *continuous*, or *direct*, current; that is, a current which always

flows in the same direction through the external circuit. In Fig. 17, the two ends of the coil are fastened to two halves s and s' of a metallic tube. These halves are called **segments,** and in this case are separated by a small air-space, the rigidity of the coil holding them apart. The combination of the two segments, or, in fact, any number

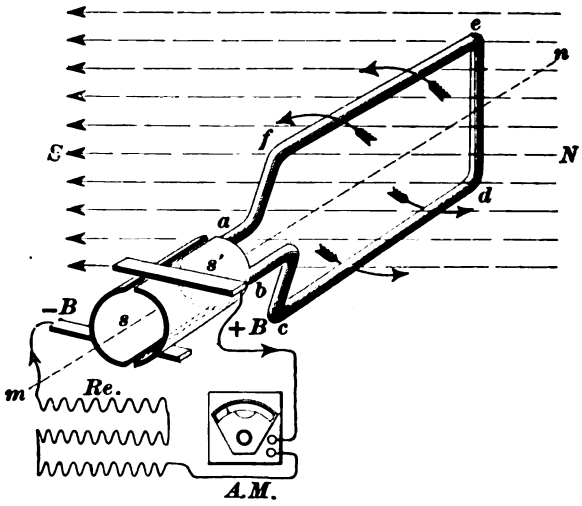

FIG. 17.

of segments held together in this position, is called the **commutator.** Two copper strips $+B$ and $-B$, called **brushes,** press against the segments, and are held in a horizontal position while the coil is rotated. The brushes rub, or *brush*, against the segments and make electrical contact only.

When the coil is in a vertical position, as represented in the figure, both brushes rest against both segments; but as soon as the coil starts on the first half of a revolution in the direction indicated by the arrows, the brush $-B$ leaves segment s', and rubs only against segment s; brush $+B$ leaves segment s, and rubs only against segment s'. As previously described, the electromotive force that is generated in the coil during the first half of a revolution causes a current to

flow from *a* through the coil to *b*, and from *b* through the external circuit to *a* again, making *b* the positive end of the coil. Hence, in this case, + *B* is the positive brush, and the current in the external circuit flows in the direction indicated by the arrow-heads. As the coil starts on the last half of a revolution, the direction of the current in the coil changes, and *a* becomes the positive end of the coil. But the current in the external circuit continues to flow in the same direction as in the first half of the revolution, and + *B* remains the positive brush. For, at the beginning of the second half of a revolution, when end *a* of the coil becomes positive, − *B* leaves segment *s* and makes contact with *s'*, and + *B* leaves *s'* and makes contact with *s*. Hence, the current in the external circuit, during a complete revolution, flows from the positive brush + *B* through the ammeter *A. M.* and the resistance *Re* to the negative brush − *B*; that is, the current in the external circuit flows continually in the same direction, while the current in the coil itself flows in two directions during every revolution. But the strength of the current in the external circuit is by no means constant; it rises from zero to a maximum strength, and falls again to zero twice in every revolution, but always in the same direction. The effect is graphically shown in Fig. 18 by the use

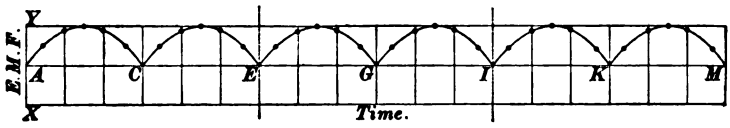

FIG. 18.

of cross-section paper, where the divisions between *A* and *E*, *E* and *I*, and *I* and *M* represent the time occupied by the coil in rotating each revolution, respectively, and the vertical divisions between the base line *A M* and the curved line represent the strength of the current in the external circuit at every instant during the three revolutions. The effect is produced continually in the external circuit if the coil is rotated at a constant speed. These impulses in the strength of the current give it the name of **pulsating** current.

A consideration of the preceding paragraphs will show the student that direct-current dynamos require commutators, while alternating-current dynamos employ only collector rings.

15. In Fig. 19, two separate coils are placed in a magnetic field at right angles to each other. Four metallic

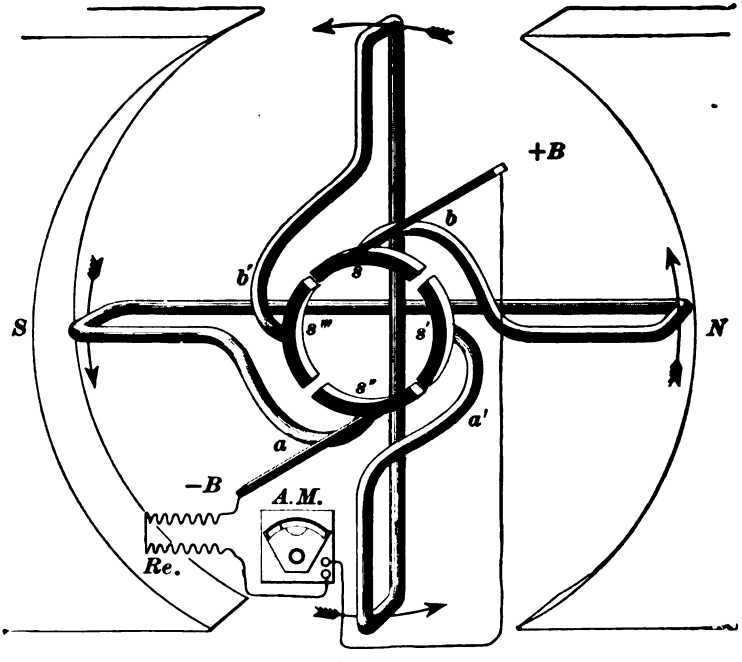

FIG. 19.

segments s, s', s'', and s''' are cut from a cylindrical ring to form the commutator, and are separated from one another by small air-spaces; the two ends of each coil are connected to two opposite segments in such manner that an imaginary diameter connecting the two segments together would lie at right angles to the plane of their coil, as shown in the figure. Two metallic brushes $+B$ and $-B$ rub against the commutator, touching the two segments diametrically opposite to each other. A line drawn through the center of the

commutator, connecting the contact ends of the two brushes, should lie at right angles to the direction of the lines of force in the magnetic field in which the coils are rotated. As the two coils and commutator are rotated in the direction indicated by the arrows, the two brushes rub against the segments consecutively and always make contact with the two opposite ones. The brushes are connected to an external circuit consisting of the ammeter *A. M.* and the resistance *Re.* At the position of the coils in the figure, the brushes are rubbing against the segments *s* and *s''*, which are connected to the ends of the horizontal coil. From previous experiments, it will be seen that at this position the horizontal coil is generating a maximum E. M. F., which tends to send a current from *a* through the coil to *b*; hence, the current is flowing in the external circuit from $+B$ to $-B$. After the coils and commutator are rotated one-eighth of a revolution from this position, and the E. M. F. in the coil begins to fall, the brush $+B$ passes from segment *s* to segment *s'*, and brush $-B$ passes from *s''* to *s'''*. The E. M. F. that is being generated in the vertical coil when the brushes pass to segments *s'* and *s'''* is nearly maximum. Consequently, the strength of the current which has been flowing in the external circuit from the other coil does not decrease to zero; it only diminishes a small amount before the segments of the next coil make contact with the brushes, when it begins to increase again. It will be seen that during one complete revolution of the moving parts, the brushes passed over four segments; that the direction of the current produced is *from* the coils *to* brush $+B$, and *into* them *from* brush $-B$. These actions produce a *continuous* current in the external circuit which flows continually in the same direction, but whose strength fluctuates, or changes, regularly four times in every revolution.

By resorting again to the cross-section paper, the fluctuations of the current in the exterior circuit can be graphically shown. In Fig. 20, the divisions between the base line *A M* represent the strength of current in the external circuit for three complete revolutions. So long as the speed

of rotation is uniform, the current decreases to a little less than three-quarters of its maximum strength, providing, of

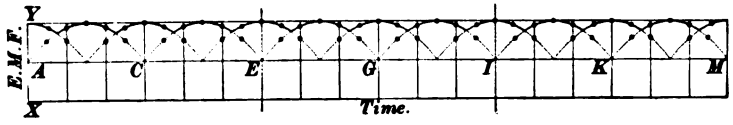

FIG. 20.

course, the resistance of the external circuit is not altered; the dotted curved lines indicate how the strength of the current would fall to zero if only one of the coils were used.

The strength of such currents can be made more uniform and the pulsations less noticeable by using several coils connected to the segments of a commutator, the planes of the coils being placed at equal angles from each other. A continuous current of uniform strength is known as a constant current.

16. In Art. **30,** Part 1, it is stated that the *permeability* of iron is much greater than that of air; or, in other words, if a piece of iron were inserted in a magnetic field, the number of lines of force in the field would be greatly increased. Hence, if the coils are wound around a cylindrical drum of iron, as shown in Fig. 21, the number of lines of force passing through the coils is increased, and the E. M. F. that is generated is greater, since, Art. **11,** the E. M. F. is proportional to the rate of cutting of the lines of force. The coils are entirely insulated from the iron core by some non-conducting material, such as cloth, mica, or paper; otherwise, they would be short-circuited on the core; that is, the current would flow through the

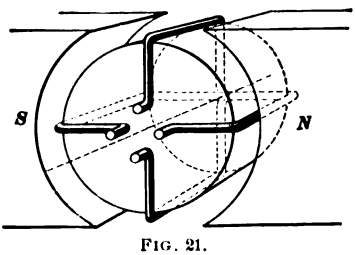

FIG. 21.

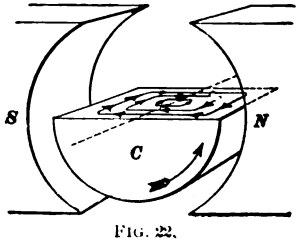

FIG. 22.

iron instead of passing into the external circuit. The other conditions remain unchanged; i. e., the lines of force have the same direction as in the previous cases, and remain in one position while the coils are revolved. The core should not be made of one solid mass of iron; for, if such were the case, the core, when rotated, would act as a large closed conductor, cutting lines of force at right angles. The E. M. F. generated in the core would cause **local,** or **eddy,** currents to flow through the iron itself, heating it and uselessly dissipating a large amount of energy. An idea of how these eddy currents would circulate in a solid iron core can be formed from Fig. 22. *C* represents the solid iron core, the top half of which is cut away. The curved lines and arrow-heads show the direction in which the eddy currents would flow if the core was rotated in the direction indicated by the large arrow. To overcome this difficulty, the core is made of a large number of round, thin iron plates, or disks, each disk being insulated from the adjacent ones by some non-conducting material, such as tissue-paper, insulating japan, or simply by the oxide formed on the surface of the disk during the process of its manufacture. The disks should be fastened together in such a manner that, when rotated in a magnetic field, their flat surfaces are parallel to the direction of the lines of force and to the direction of rotation, as shown by Fig. 23. Dividing the core into disks in no way diminishes the magnetic permeability of the iron, and for all practical purposes, it prevents the eddy currents from flowing. A core made in this way is said to be **laminated.**

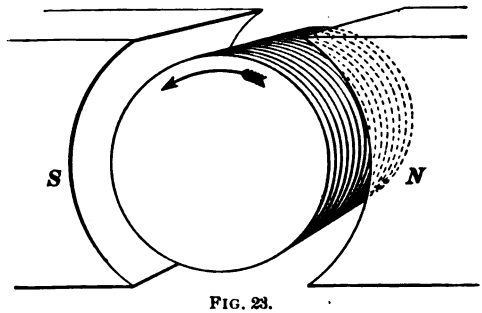

FIG. 23.

17. Iron cores are generally made in two styles: **drum** or **ring.**

A drum core may be defined as a laminated cylinder, the length being generally greater than the diameter, such as shown in Fig. 23.

A ring core may be defined as a laminated rim of rectangular cross-section, such as R in Fig. 24.

An iron core inserted between the poles of a magnet not only increases the total number of lines of force from the magnet, but attracts nearly all the stray lines of force from the surrounding air; that is, the lines of force prefer to complete their circuit through iron rather than through air or other non-magnetic substances. For example, in Fig. 24, an iron ring R is placed between the poles N and S of

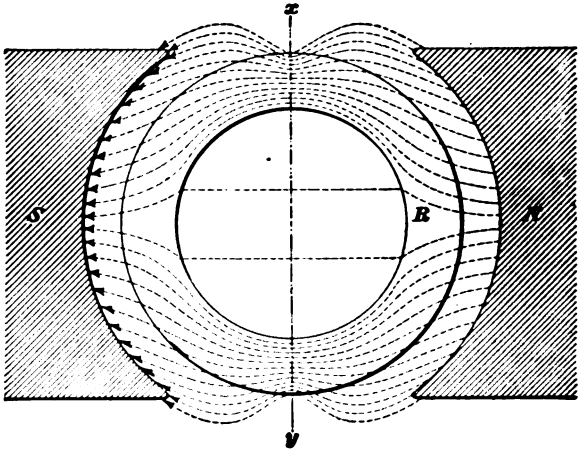

FIG. 24.

a magnet; the lines of force pass out from the north pole N and enter the iron ring. When passing across the air-gap, they are uniformly distributed, but after entering the ring, they crowd together and remain in the iron as long as possible. If the total number of the lines of force is large in comparison with the cross-sectional area of the iron ring on $x\,y$, a few will pass through the air in the inside of the ring, as shown in the cut; but in most cases the number of such stray lines is not large enough to be considered. Consequently, in Fig. 25, if a loop of insulated wire $a\,b\,c\,d$ is

wound around the iron ring, and the ring and loop are rotated on a central axis *m n* like the rim of a fly-wheel, only that part of the loop from *a* to *b* is cutting lines of force; the rest of the loop, from *b* to *c* and from *c* to *d*, is inactive in relation to the lines of force. From the rule

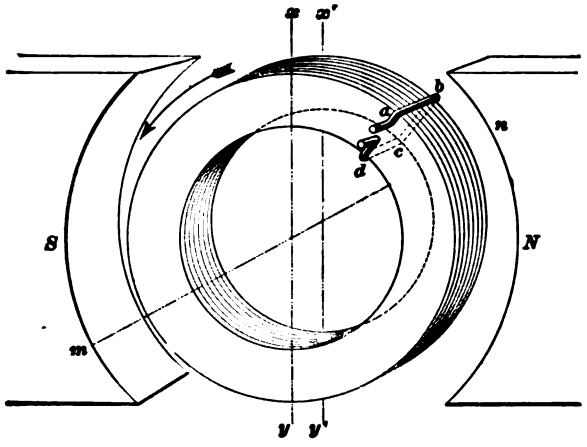

FIG. 25.

given in Art. **8**, it will be seen that the E. M. F. generated in the side *a b* of the loop tends to send a current from *b* to *a* during the first half of the revolution from *y y'* to *x x'*, and in the opposite direction during the last half.

18. No current will flow from the loop through the external circuit when the ring is made of some non-magnetic substance, as will be understood from the following explanation: Imagine the iron ring to be moved from the field without disturbing the loop; then, imagine the loop to be rotated around the axis *m n* in precisely the same path as before. The lines of force in the field are now uniformly distributed, and as the loop moves, the part between *c* and *d* will cut the lines of force at approximately the same rate as the part between *a* and *b*. But the electromotive forces generated in the two parts tend to oppose each other; that is, the E. M. F. generated between *a* and *b* tends to act

away from *b*, and that generated between *c* and *d* tends to act away from *c*. Hence, there is no difference of potential between the ends *a* and *d*, and no current will flow through an external circuit.

After replacing the iron ring again, suppose the insulated wire to be wound around it several times, as represented in

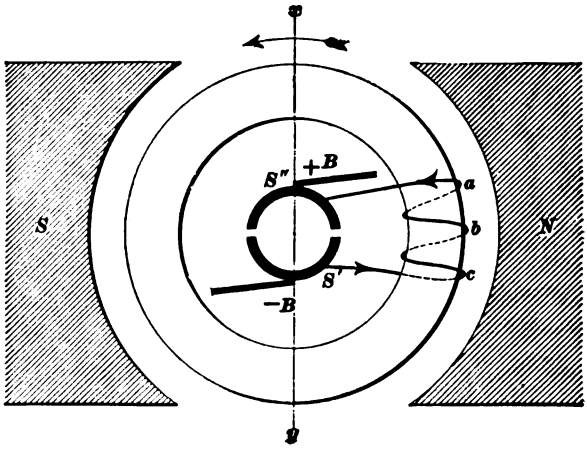

FIG. 26.

Fig. 26, and the ends of the coil connected to two metallic segments S' and S''. By applying the rule in Art. **8**, it will be seen that the electromotive forces generated in the separate turns at *a*, *b*, and *c* are added together; that is, the difference of potential between the brushes $+B$ and $-B$ is the sum of the electromotive forces generated in the separate turns. The current obtained from such a coil is *pulsating*, and is similar to that described in Art. **14.** For all practical purposes, the total E. M. F. generated by such a coil is directly proportional to the number of turns. For example, if a coil of one turn generates two volts at a certain position and angular velocity, then a coil of 4 turns will generate 8 volts under the same conditions, and so on. But the turns in each coil must be approximately close together. For, if the coil is wound over a large portion of the ring, some of the turns, at one position

of the coil, will be cutting the lines of force as they pass out from the north pole, while other turns will be cutting the lines of force as they enter the south pole, the electromotive forces generated in the two cases being opposed to each other. This action will be readily understood by winding the entire core with one large coil of several turns and connecting the two ends of the coil together, as represented in Fig. 27. This is known as a *ring* winding, or one in which the conductors are wound in the form of a helix

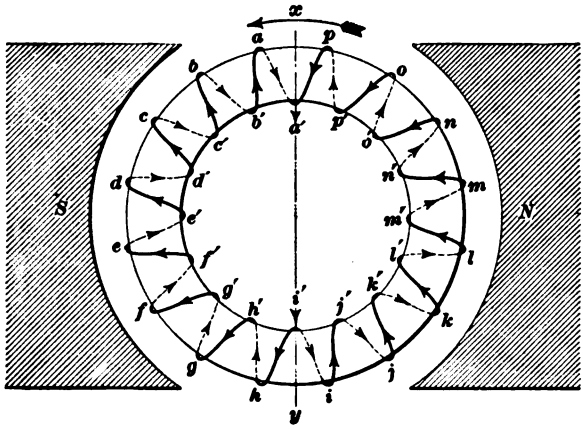

FIG. 27.

on a ring core. At the instant the ring and coils reach the position shown in the figure, the E. M. F. generated in the separate turns tends to act in the direction indicated by the arrow-heads upon the winding. No current can flow around the coil, because the electromotive forces generated in the two halves act towards each other at a', and away from each other at i'.

19. It is possible, however, to obtain a continuous current from the coil by the addition of a commutator with several segments, as will presently be seen. If the ends of a voltmeter are touched to a' and i' during the instant the coil occupies the position in Fig. 27, a difference of potential between the two points will be indicated, a' being the

positive point and i' the negative. Hence, if these two points are connected to an external circuit, a current will flow through it from a' to i', while the coil is at the position shown in the figure. As soon, however, as the coil is rotated about one-sixteenth of a revolution, the difference of potential between a' and i' will begin to fall, and the greatest difference will now be found between p' and h'. About another sixteenth of a revolution will bring the greatest difference of potential between o' and g', and so on. In short, as the coil is rotated, the greatest difference of potential will always be found between any two turns situated diametrically opposite one another when they pass through the vertical diameter $x\,y$. The next operation is to provide some means to utilize this difference of potential between each pair of turns as they arrive in a vertical position. This is accomplished by connecting each turn to a separate segment of a commutator by a small conductor, and

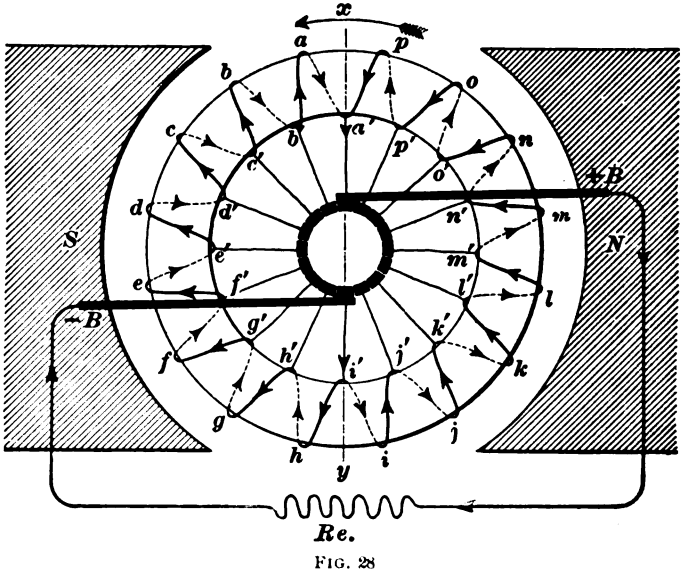

FIG. 28

allowing two brushes to rub against the commutator at two points diametrically opposite each other on the vertical

diameter $x\,y$, Fig. 28. From an examination of the figure, it will be seen that the two halves of the coil are connected in parallel or multiple; that is, the current divides at i', one half passing through the turns i, j, k, l, etc., and the other through h, g, f, e, etc. to a', where it again unites. The maximum E. M. F. that is obtained from the coil is equal, therefore, to the E. M. F. generated in one half of the coil. This statement will be better understood by comparing the coil to a battery of voltaic cells connected in multiple-series. For example, in Fig. 29, the separate cells from a to h, inclusive, correspond to the separate turns on one half of the coil, and the cells from i to p correspond to the turns on the other half. From Art. **56,** Part 1, the total E. M. F. of the above battery is equal to the E. M. F. of either of the two sets which are connected in parallel; and the total E. M. F. of either of the two sets is the product of the E. M. F. of 1 cell and the number of cells which are connected in series, as from a to h, inclusive.

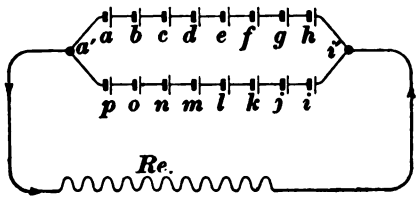

FIG. 29.

If a comparatively large number of turns and segments is used, the current flowing from $+B$, Fig. 28, through the external circuit to $-B$ will be practically continuous, that is, non-pulsating; the fluctuations caused by the brushes when passing from one segment to another are extremely minute, and produce no appreciable change in the strength of the current in the external circuit.

20. A conductor wound upon a core in the manner shown in Figs. 27 and 28 is termed a **closed-coil winding,** since all the turns are connected together in one *continuous*, or *closed*, coil, and the current is obtained from it by tapping into each turn or set of turns. In the case where the turns or sets of turns are separate and distinct from each other and their ends are connected to opposite segments of a

commutator, as in Figs. 19 and 26, the winding is termed an **open-coil** winding.

21. A *closed-coil winding* can be applied to a cylindrical drum core as described in Art. **16,** and a continuous non-pulsating current obtained from the brushes, as in the case of the ring core. The method of winding is somewhat

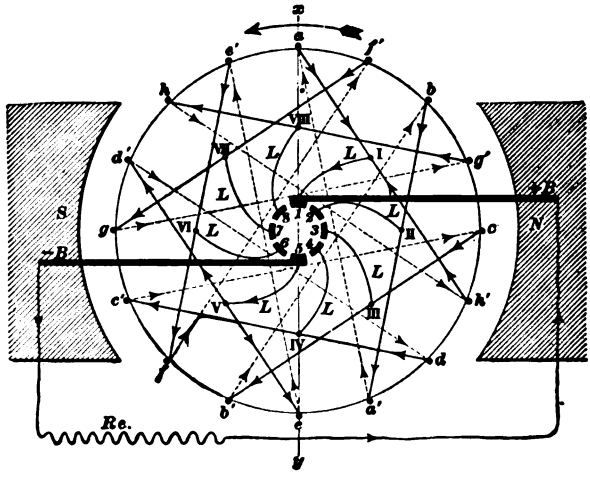

FIG. 30.

similar to that of the ring, and each turn or set of turns is tapped into and connected to the segment of a commutator by a separate lead, as will be seen from the diagram, Fig. 30. This is known as a drum winding, or one in which the conductors are wound longitudinally upon the surface of a drum core. A drum winding may also be applied to a ring core, as will be seen. The conductor is started at any convenient place on the core, as, for example, at *a*, and wound across the face of the drum to the rear end; then, wound nearly diametrically across the end, and from there along the face of the core to the front end at *a'*. From *a'*, the conductor is wound across the front end to a point somewhat in advance or behind the original starting-point *a*, as, for example, to *b*; from *b* it makes another complete turn

in like manner, which is followed by a third, and so on, until the last turn is connected to the first by joining the two ends of the coil together at *a*. A separate lead *L* is tapped into the conductor at every complete turn where it is wound across the front end of the core and connected to the separate segments of a commutator. From an examination of the diagram, it will be seen that only a part of the wires on the face of the drum are cutting the lines of force as they enter and pass out of the core at any one instant during a revolution. At the position represented, the wires *c'*, *a*, *f'* and *b'*, *e*, *a'* are the inactive ones, so far as the lines of force are concerned; but they still perform the important function of completing the circuit for the current. The parts of the core where the wires are not cutting the lines of force as the core is rotated are called the **neutral spaces;** and the two opposite parts of the commutator to which the coils are connected are called the **neutral points** of the commutator. Each individual wire becomes inactive twice during every revolution and passes through two neutral spaces; but this fact does not change the positions of the neutral spaces—they lie on an imaginary diameter approximately perpendicular to the lines of force. This same effect takes place in the commutator, i. e., each segment passes through two neutral points during one complete revolution, but the neutral points remain in a fixed position relative to the neutral spaces of the core. The neutral segments of the commutator, at any instant during a revolution, are those segments which are connected to the wires passing through the two neutral spaces at that instant. The neutral points, however, can be shifted to different points around the commutator by changing the leads from the coil to the segments. For example, in Fig. 30, the two neutral points lie opposite each other on the commutator along the vertical diameter *x y*. But if the lead from *I* is connected to segment No. *7*, instead of No. *1*, and the lead from *II* to segment No. *8*, and so on around the commutator, then the two neutral points will lie opposite each other on the commutator along a horizontal diameter, and in order to collect

any current from the commutator, the brushes $+B$ and $-B$ must be shifted around a quarter of a revolution to these new neutral points.

The current flowing through the winding divides at one neutral space and flows through the coil in opposite directions, uniting again at the other neutral space as indicated by the arrow-heads. According to the rule given in Art. **8**, the current in all the active wires in front of the north pole flows along the periphery of the core towards the observer; that in the wires in front of the south pole flows away from the observer.

22. The next step is to determine the magnitude of the E. M. F. in volts generated in a closed coil. As previously stated, the E. M. F. generated in a conductor cutting lines of force at right angles is proportional to the *rate of cutting.* Consider the case of a single conductor moving across a magnetic field in which the total number of lines of force is known; the rate of cutting is equal to the total number of lines of force cut by the conductor, divided by the time required to cut them. This may be expressed in the form of an equation: thus, *rate of cutting* $= \frac{N}{t}$, where N is the total number of lines cut and t is the time required to cut them. By definition, *one volt* is that E. M. F. generated in a conductor when it is cutting lines of force at the rate of one hundred million (100,000,000) per second. Hence, $E = \frac{N}{10^8 t}$, where E is the E. M. F. in volts and t the time in seconds, since $100{,}000{,}000 = 10^8$.

For example, suppose a magnetic field contains 4,500,000 lines of force, and a conductor cuts the total number in the same direction in 1.5 seconds. The E. M. F. that is being generated in the conductor is equal to .03 volt, since $E = \frac{N}{10^8 t} = \frac{4{,}500{,}000}{100{,}000{,}000 \times 1.5} = .03$ volt.

When two or more conductors are cutting lines of force

at equal rates, the E. M. F. obtained by connecting them in series is equal to the E. M. F. developed by one conductor multiplied by the number of conductors. Consequently, if S is the number of conductors in series, then $E = \frac{NS}{10^8 t}$, where E is the total E. M. F. in volts that can be obtained from S conductors cutting N lines in t seconds. For example, if 8 conductors are moved across the magnetic field containing 4,500,000 lines of force in 1.5 seconds, and they are connected in series, then $E = \frac{NS}{10^8 t} = \frac{4{,}500{,}000 \times 8}{100{,}000{,}000 \times 1.5} =$ .24 volt.

Next, imagine these eight conductors to be moved across the magnetic field in the same direction at the rate of 30 times per second for 1.5 seconds; then, the number of lines cut in one second is $4{,}500{,}000 \times 30 = 135{,}000{,}000$, and the total number of lines cut in 1.5 seconds is, therefore, $135{,}000{,}000 \times 1.5 = 202{,}500{,}000$. Hence, $E = \frac{(N n t) S}{10^8 t} = \frac{202{,}500{,}000 \times 8}{100{,}000{,}000 \times 1.5} = 10.8$ volts.

Here n = the number of times per second that one conductor cuts the lines of force.

But, in general, the E. M. F. that is obtained from several conductors connected in series moving continually across the same magnetic field at a constant number of times per second is independent of the length of time the operation is continued. For, in the above equation, $E = \frac{(N n t) S}{10^8 t}$, the two t's cancel one another, leaving the equation, $E = \frac{NSn}{10^8}$. In the above example, for instance, so long as the eight conductors are moved across the magnetic field at the rate of 30 times per second, the E. M. F. generated in them is always 10.8 volts, no matter whether the operation is continued for 1.5 seconds or for one hour. The time of 1.5 seconds was used merely to make the demonstration clearer by using a specific value for t.

23. The equation $E = \frac{NSn}{10^8}$ can now be applied with some modifications to the closed-coil conductor wound upon either the ring or drum core. The ring core, Fig. 28, will first be considered. In the equation, E is the maximum E. M. F. in volts that is obtained from the brushes $+B$ and $-B$ when the core is revolved; N is the total number of lines of force passing from the north pole through the core to the south pole. Each wire, therefore, on the periphery of the core cuts the total number of lines twice during every revolution; or, in other words, each outside wire cuts $2N$ lines of force per revolution. S is the number of outside wires on the periphery through which the current flows in *series*, and n is the number of complete revolutions per second of the core. Therefore, the maximum E. M. F. in volts that is obtained from the brushes is found by the formula

$$E = \frac{2NSn}{10^8}. \qquad (1.)$$

That is to say, *the E. M. F. obtained from a number of conductors connected in series and moved across a magnetic field is equal to twice the number of lines of force multiplied by the number of conductors in series and by the revolutions per second of the core, divided by* 100,000,000. For example, assume the total number of lines N passing from the north pole through the core to be 3,000,000, or $N = 3{,}000{,}000$. In the diagram, Fig. 28, there are 8 outside wires in series, or $S = 8$. If the core is rotated at 2,100 revolutions per minute, $n = \frac{2{,}100}{60} = 35$ revolutions per second. Substituting the values in the formula gives $E = \frac{2NSn}{10^8} = \frac{2 \times 3{,}000{,}000 \times 8 \times 35}{100{,}000{,}000} = 16.8$ volts, or the difference of potential between the brushes $+B$ and $-B$ on open circuit. The difference of potential between the brushes when the external circuit is closed is somewhat smaller than when

no current is flowing; because, as in the case of the voltaic cell, a part of the total E. M. F. developed is required to overcome the internal resistance of the coil itself.

The formula $E = \frac{2NSn}{10^8}$ holds equally true for the drum core, Fig. 30. In both cases, the number of outside wires through which the current flows in *series* is equal to one-half the total number of outside wires. Hence, by using the same magnetic field and rotating the cores at equal speeds, the E. M F generated in both cases will be equal.

24. The foregoing articles demonstrate the elementary principles and physical theory of a *dynamo.* A **dynamo,** therefore, is a machine for converting mechanical energy into electrical energy by electromagnetic induction. It has three essential features, viz.: (1) a magnetic field; (2) a conductor, or several conductors, called an **armature,** in which the electromotive force is generated by some movement relative to the lines of force in the magnetic field; and (3) a *commutator*, or a *collector*, from which the current is collected by two or more conducting brushes.

In all dynamos, the magnetic field is produced either by a permanent magnet or by an electromagnet, and they are classified accordingly; for present purposes, however, it is sufficient to consider only the uniform magnetic field lying between the poles of some large magnet. In the preceding article, the armature core and commutator were assumed to be fastened rigidly to a shaft and the shaft supported by suitable bearings in such a position that the core would rotate in the magnetic field with its axis of rotation at right angles to the lines of force. The shaft with core and commutator was assumed to be rotated by some exterior mechanical power. The armature conductors were wound directly upon the core and rotated with it. If it were not for mechanical considerations, however, only the armature conductors would need to be rotated; the core could remain stationary.

ARMATURE REACTIONS.

25. When the current is flowing through the armature conductors, it produces several effects upon the magnetic field; and the field, in return, reacts upon the current. These effects will be considered before describing the typical forms of dynamos.

Consider the case of a single conductor in which a current is flowing from a voltaic battery or a continuous-current dynamo, and a magnet. It has been shown that a magnet and a conductor conveying an electric current exert a mutual force upon each other; or, in other words, each tends to produce motion in the other. In the case of a compass placed over or under a conductor conveying a current, if the magnetic needle be held rigidly and the conductor be allowed to swing freely in a horizontal plane, it would tend to place itself at right angles to the length of the needle. In general, *when a conductor conveying an electric current is placed in a magnetic field, the conductor will tend to move in a definite direction and with a certain force, depending upon the strength and direction of the current, and upon the direction and density of the lines of force in that field.*

Imagine that a conductor conveying an electric current is placed across a uniform magnetic field, and that it lies in a position at right angles to the lines of force. For example, the diagram in Fig. 31 represents a cross-sectional view of a uniform magnetic field, the dots representing the ends of the lines of force and the heavy line a conductor conveying a current. The direction of the lines of force is assumed to be downwards, that is, piercing the paper; or, in other words, the observer is looking along

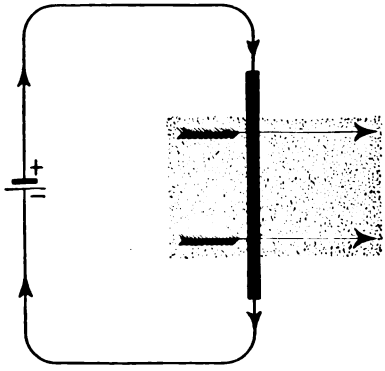

FIG. 31.

the lines of force towards the face of a south magnetic pole. The lines of force along the conductor from the top to the bottom of the magnetic field act upon the current in the conductor with equal intensities, and all tend to move the conductor in the same direction. This action, if the magnetic field is uniform, is similar to that of a uniformly distributed load upon a beam tending to move or bend it.

The motion imparted to the conductor is perpendicular to the lines of force, and also perpendicular to the flow of current in the conductor. To fulfil these conditions, therefore, the conductor in Fig. 31 must tend to move bodily either to the right or left across the field; in which of these two directions it moves depends upon the relative direction of the lines of force with the direction of the current in the conductor. In this case, if the direction of the lines is downwards, piercing the paper, and the current flows *from* the top *to* the bottom of the diagram, as indicated by the small arrow-heads, the conductor will tend to move from the left to the right in the direction in which the two large arrows are pointing. If the direction of the lines of force only is changed, the conductor will tend to move in the opposite direction, i. e., from the right to the left; or, if the direction of the current in the conductor only is reversed, the conductor will tend to move also from right to left across the field. But should both the direction of the lines of force and the direction of the current in the conductor be changed, the conductor would still tend to move from left to right.

26. There is a convenient thumb-and-finger rule for remembering the direction of motion imparted to a conductor conveying an electric current when placed in a magnetic field; it is similar to the rule for generated currents, Art **8**, with the exception that the *left hand* is used instead of the *right*.

Rule.—*Place thumb, forefinger, and middle finger of the left hand each at right angles to the other two; if the forefinger points in the direction of the lines of force, and the*

middle finger points in the direction towards which the current flows, then the thumb will point in the direction of movement imparted to the conductor.

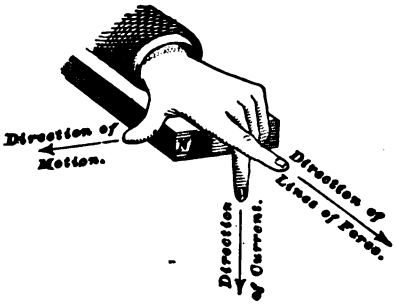

FIG. 32.

For example, in Fig. 32, if a vertical conductor in which a current is flowing downwards is placed in front of the north pole N of a magnet, it will tend to move in the direction as indicated by the thumb.

27. Comparing the rule in Art. **8** with that given above, it will be seen that the two appear to oppose each other; or, in other words, the current which flows in the former case, according to the latter rule, tends to oppose the motion of the conductor and move it in the opposite direction. This is exactly what takes place. When a conductor is moved across lines of force, an electromotive force is generated which tends to send a current in a definite direction; if the circuit is open and no current flows, it requires no force to move the conductor across the field; but if the circuit is closed and a current flows through the conductor, then the action of the lines of force on the current opposes the original motion and tends to stop or retard the conductor. The opposing force is proportional to the strength of current flowing in the conductor; that is, if a current of 10 amperes acts with a certain force, a current of 20 amperes will act with twice that force, and so forth. Hence, the stronger the current in the conductor, the greater will be the force necessary to keep the conductor moving in the original direction. The above explanation will be made clearer by the graphical illustration in Fig. 33. The diagram represents a cross-sectional view of a magnetic field, the direction of the lines of force being downwards, piercing the paper. If the conductor c c' be moved across the field by some

exterior motive power in the direction indicated by the arrows *a*, *a*, a current will flow through the circuit in the direction indicated by the small arrow-heads, according to the rule given in Art. **8.** The length of the arrows *a*, *a* may also serve to represent the magnitude of the force that moves the conductor. As the current flows through the conductor, the lines of force immediately react upon it, producing a *counter* force which tends to stop the conductor and move it in the direction indicated by the arrows *b*, *b*. The counter force would never actually move the wire in the direction of the arrows *b*, *b*, but it exerts a dragging effect upon the conductor, which would reduce its speed and almost stop its motion if the exterior motive force were not increased. So long as the conductor is moved, the applied motive force is always larger than the counter force, as graphically represented by the relative lengths of the arrows.

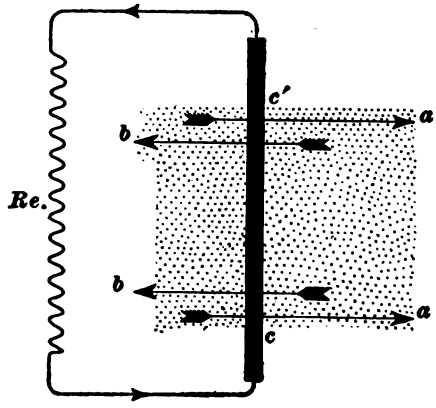

FIG. 33.

28. The above principle explains the action of converting the mechanical energy into electrical energy in the dynamo. For example, suppose that an armature is rotated at a constant speed in a magnetic field by some exterior motive force, as, for instance, by a belt from an engine. If the armature is properly wound and connected to a commutator, an electromotive force is generated in the outside conductors on the core, causing a difference of potential between the brushes. If the brushes are not connected to an external circuit, and no current is flowing through the armature, it requires no energy to rotate the armature, excepting a small amount to overcome the friction of the

shaft in the bearings and the loss in the armature iron by eddy currents. By connecting the brushes to an external circuit, however, and allowing a current to flow through the armature, the conditions are altered. The lines of force react upon the current in the conductors, tending to rotate the core in an opposite direction and to retard its motion; the stronger the current, the greater will be the retarding effect. Hence, in order to keep the speed constant and to generate a constant E. M. F., more energy must be supplied to the pulley from the engine. This retarding effect of the current is known as the **counter torque** of a dynamo. The word torque, which will appear later in connection with the action of motors, means simply *turning* force.

It can be mathematically proven that the mechanical energy delivered to the armature from any exterior source is exactly equal to the electrical energy obtained from the armature plus the energy lost in mechanical friction, eddy currents in the iron, and other small losses, which will be described subsequently.

29. Besides producing a counter torque in the armature, the current tends to distort or crowd the lines of force from their original position in the magnetic field. This effect is termed **armature reaction,** and will be understood by investigating the magnetic effects of the current in the armature when the armature is removed from between the poles of the field-magnets. In the diagram, Fig. 34, the current is flowing through the armature coil in the same direction as represented in

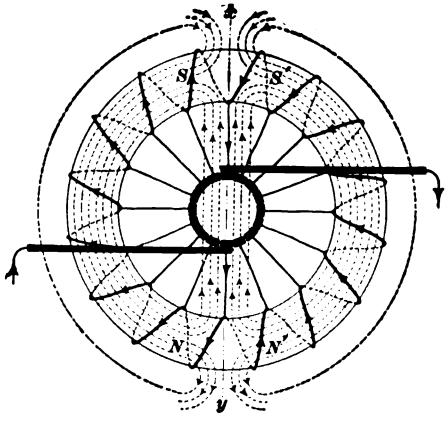

FIG. 34.

Fig. 28. The current circulating around the armature coil in two directions acts as a magnetizing force upon the core and produces two electromagnets. According to the rule for magnetic polarity, the two magnets thus formed oppose each other at the two neutral spaces of the armature; that is, their like poles N, N' and S, S' tend to act in opposite directions at the neutral spaces. As previously explained, lines of force can never intersect each other, and will always produce consequent poles when acting in opposite directions at one place. Therefore, in this case, two consequent poles are formed in the core, one at each neutral space, as shown in the diagram. The polarity of the consequent poles, of course, depends upon the direction in which the coil is wound upon the core and the direction in which the current is generated. The same action occurs when the armature is rotated between the poles of a magnet and a current flows through the coil, although the conditions are somewhat altered. The lines of force from the magnet tend to pass through the core nearly at right angles to those produced by the current. The lines can never intersect, however, and they crowd and distort one another in order to coincide in direction. The lines that pass out from the north pole of the magnet tend to enter the core at the south consequent pole and to pass out from the core at the north consequent pole. At the same time, the south consequent pole is shifted towards the north pole of the magnet, and the north consequent pole towards the south pole of the magnet. The diagram in Fig. 35 represents the manner in which the magnetic field is distorted by the reaction of the armature current. In the case where the armature was removed from the magnetic field, the consequent poles coincided with the neutral space; but when the armature is replaced, as in the diagram, the consequent poles are shifted backwards against the direction of rotation, and the neutral spaces are moved forwards in the opposite direction, as indicated by the imaginary diameter $x\,y$. As the positions of the neutral points on the commutator depend upon the positions of the neutral spaces on the core, they are also shifted

forwards in the direction of rotation when the current flows through the armature; hence, the brushes must be moved

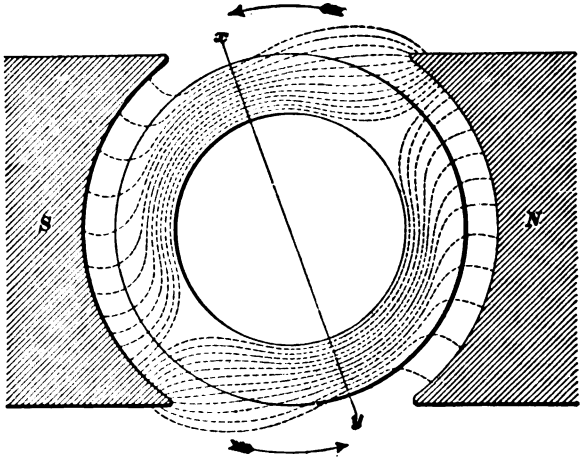

FIG. 35.

forward in order to obtain the full E. M. F. generated in the coil. The stronger the current, the farther forwards the brushes should be shifted.

30. From the fact that in all dynamos of this character the relation of the lines of force, direction of rotation, and direction of current are constant, *the neutral spaces are always shifted forwards in the direction of rotation when the current becomes stronger*, no matter how the coil is wound upon the armature, or in which direction the lines of force pass through the core.

These armature reactions are not confined entirely to the ring core, but are produced with the same effects in a drum-core armature, such as represented in Fig. 30. If the direction of the current is traced by the arrow-heads upon the conductors, it will be seen that the current is flowing upwards along the face of the core in front of the north pole, as represented by the open circles, Fig. 36, and downwards in front of the south pole, as represented by the solid circles. The lines of force surrounding each conductor in which the

current is flowing coincide with those around the adjacent conductors, forming a large number of long lines which pass through the core and produce consequent poles at the neutral spaces, as shown in Fig. 36. The direction of the lines of force around the conductors in which the current is flowing downwards corresponds with the movements of the hands of

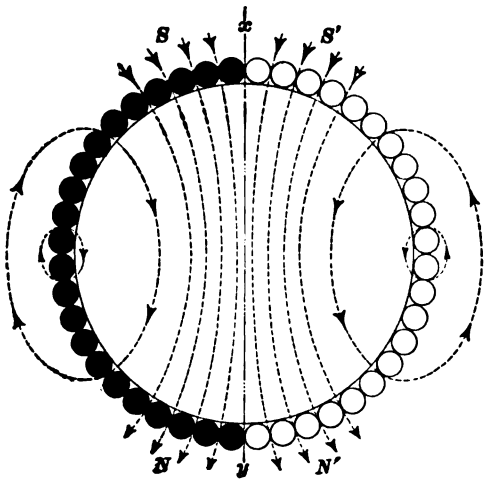

FIG. 36.

a watch, while the direction of the lines around the other conductors is opposite. The lines from all conductors, however, coincide in direction in passing through the center of the core. When the armature is rotated between the poles of a magnet, the field is distorted, and the neutral spaces shifted forwards in a manner similar to that described for the ring core.

31. Armature reactions not only distort the magnetic field, but also have a tendency to reduce the total number of lines of force from the magnet, and thereby diminish the E. M. F. generated in the armature. This effect, however, can be almost entirely eliminated by increasing the strength of the field, or, in other words, by increasing the number of lines of force passing through the core. This fact leads to the consideration of *field-magnets.*

FIELD-MAGNETS.

32. In Art. **24** it was stated that the magnetic field in all dynamos is produced from either a permanent magnet or an electromagnet. A dynamo of the first class is called a **magneto-machine.** Such machines are necessarily small on account of the difficulty of making large permanent magnets; in fact, the field in most magneto-machines is produced by several permanent magnets placed side by side. The magnets are usually of the U-shaped pattern, of hard steel, and with a recess bored out between the ends of the poles to admit the armature, as shown in the diagram, Fig. 37.

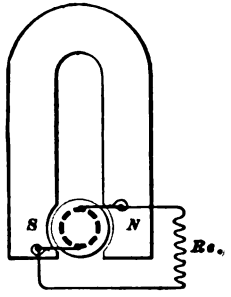

FIG. 37.

As the majority of magneto-machines are made for testing and signaling purposes where alternating currents can be used to advantage, the armature is wound with one large coil of wire, and the two ends of the coil are connected to two separate collector rings, as shown in Fig. 38. The alternating current is obtained from two brushes, one rubbing against

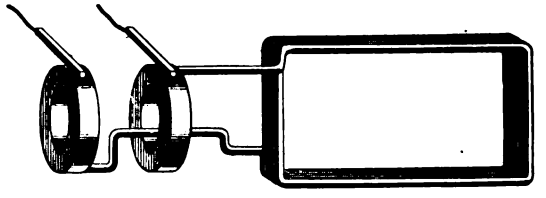
FIG. 38.

each collector ring. The brushes can bear upon the collector ring at any position relative to the coil and the field-magnets, since all parts of one collector ring are at the same potential in any instant. By comparing this coil with that in Fig. 13, it will be seen that the current obtained from the two brushes flows in two directions during every revolution.

33. In nearly all dynamos furnishing current for lamps, power, and other commercial purposes, the magnetic field is

produced by an electromagnet. This class of dynamos is divided into various types, depending upon the manner in which the current is obtained to excite the field-magnets.

34. The first class of machines to be considered is termed a **separately-excited** dynamo, from the fact that its field-magnets are excited or magnetized by a current from some external source, as, for instance, a voltaic battery, or another continuous-current dynamo. The connections of a separately-excited dynamo are represented in Fig. 39. The magnetizing coils are wound around the cores of a magnet and connected to the terminals of a voltaic battery B. The exciting current flows from the battery around the cores of the field-magnet in such a direction as to produce a closed magnetic circuit through the armature, and has no connection whatever with the current obtained from the brushes by rotating the armature. If the strength of the exciting current is not changed, the difference of potential between the brushes of the dynamo when the armature is rotated at a uniform speed remains constant so long as the external circuit is open; but when the external circuit is closed, the difference of potential gradually diminishes as the strength of current increases, owing to the internal resistance of the armature conductors and the reactions of the armature current on the field.

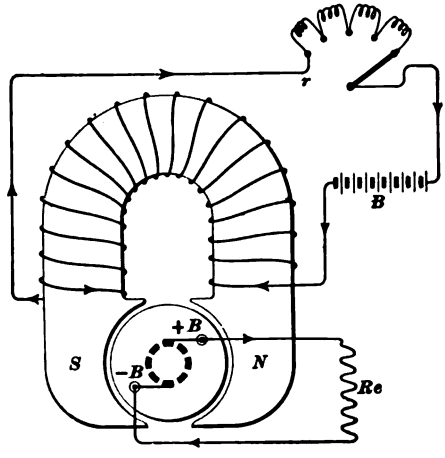

FIG. 39.

35. The **magnetizing force** is that which produces the lines of force in the magnet. Its strength is proportional

to the strength of current flowing and to the number of coils or complete turns around which the current circulates. The total number of turns multiplied by the strength of the current in amperes will give the magnetizing force in **ampere-turns.** It has been proven that 10 amperes circulating around 20 turns exert precisely the same magnetizing force as 1 ampere circulating around 200 turns, or as 200 amperes circulating around 1 turn. In each of these cases, the magnetizing force is 200 *ampere-turns.* But the number of lines of force produced in an electromagnet is not directly proportional to the magnetizing force in *ampere-turns.* The strength of the magnet in lines of force depends upon the permeability of the magnetic substances used in the core. The permeability varies greatly in different magnetic substances, depending upon both the physical condition and the chemical composition of the substance. In general, *wrought iron, soft sheet iron,* and *steel* have greater permeability than cast iron, and, whenever available, should be used in field-magnets in preference. The permeability, however, of all magnetic substances changes with every stage of magnetization. In all kinds of magnetic substances, the permeability decreases when the magnetism is increased beyond a certain limit. This tendency of the substance to become less permeable is called **magnetic saturation;** that is, the substance becomes *saturated* with lines of force and can not hold any more. A limit is never reached where actual saturation takes place, but there is a limit beyond which it becomes impracticable to magnetize the substance. The practical saturation in wrought iron, soft sheet iron, and cast steel is when there are between 120,000 and 130,000 lines of force per sq. in. of sectional area of the iron, measured on a plane at right angles to the lines of force in the magnet. In gray cast iron, the practical saturation limit is from 60,000 to 70,000 lines of force per sq. in. Hence, when these limits are exceeded, it requires an enormous increase in the *ampere-turns* to produce a slight change in the number of lines of force in the magnet. In general, however, the field-magnets of dynamos are

designed with the density of the lines of force below the saturation limits, and it is safe to assume that any change in the strength of the current circulating around the magnetizing coils produces a corresponding change in the number of lines of force passing through the magnetic circuit. Consequently, if the strength of the current in the field coils of a *separately-excited* dynamo is increased as the current in the armature becomes stronger, the E. M. F. obtained from the brushes will remain practically constant. This is usually accomplished by inserting an adjustable resistance-box, or field rheostat r, in series with the battery and field coils, and decreasing the resistance as the difference of potential between the brushes tends to drop.

36. The second class of machines with an electromagnet is termed a **self-exciting shunt dynamo,** or simply a **shunt dynamo,** from the fact that the exciting current for the field-magnet is furnished by the dynamo itself, the

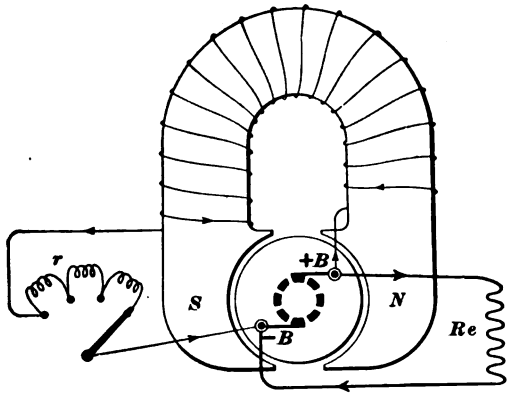

FIG. 40.

field coils being connected in *shunt* with the external circuit from the brushes. In Fig. 40, one terminal of the magnetizing coil is connected to the positive brush, and the other to a binding-post on the field rheostat r; the negative brush is connected to the arm of the field rheostat. If the resistance of the rheostat is neglected or cut out, it will be seen

that the total difference of potential exists between the terminals of the magnetizing coils when the dynamo is generating its maximum E. M. F. The magnetizing coils of a shunt dynamo, however, consist of a large number of turns of fine copper wire, thus making the resistance large in comparison with the difference of potential between the field terminals. In well-designed dynamos the resistance of the shunt coil is large enough to allow not more than about 5% of the total current of the dynamo to pass through the field coils; for, according to Ohm's law, the strength of current in amperes circulating around the field coils is equal to the difference of potential in volts between the brushes, divided by the resistance in ohms in the field coil, neglecting the resistance of the rheostat. For example, suppose that the difference of potential between the brushes of a shunt dynamo is 500 volts when a current of 10 amperes is flowing from the armature. If 5% of this current is required to excite the field-magnets, the strength of current circulating around the field coils is $10 \times .05 = .5$ ampere; and if E_s is the E. M. F. at the brushes, C_s is the current in the shunt field, and R_s is the resistance of the shunt field, then, according to Ohm's law, $R_s = \frac{E_s}{C_s} = \frac{500}{.5} = 1{,}000$ ohms.

37. When a shunt dynamo is rotated at a constant speed, an appreciable length of time elapses before the armature generates a maximum E. M. F. after the field circuit is closed, and in some cases a self-exciting dynamo will generate no E. M. F. until after it has been once separately excited. The starting of a dynamo to generate an E. M. F. is termed **picking-up,** or **building-up.** If the field current of a dynamo is open so that no current flows through the magnetizing coil, the armature would generate no E. M. F. when rotated, providing the field-magnets were not permanent magnets; consequently, when the field circuit is closed on a shunt dynamo, no current will flow through the magnetizing coils, because there is no difference of potential between their terminals. But nearly all

magnetic substances become permanent magnets in a slight degree after once being magnetized.

This permanent magnetism is called **residual magnetism,** since it *resides* in the metal after the magnetizing force has been removed. In general, soft iron and annealed steel retain only a small amount of magnetism, and in some cases the residual magnetism is imperceptible. Chilled iron and hardened steel retain residual magnetism in large quantities. Artificial or permanent magnets are made by placing a piece of hardened steel in a dense magnetic field or in contact with another magnet. Lodestone is the result of a natural residual magnetism. Iron and its alloys will also become slightly magnetized in the process of refining and working.

From these facts it will be seen that the cases where field-magnets do not exhibit some residual magnetism are exceedingly rare. The armature conductors when cutting the lines of force of the residual magnetism generate a small E. M. F., and this E. M. F., in turn, causes a feeble current to circulate around the magnetizing coils when the field circuit is closed. The residual magnetism is, therefore, reenforced by the magnetizing effect of the current, which is followed by an increase in the E. M. F. generated, and that, in turn, by a stronger current in the field. These actions and reactions continue until a limit is reached where the fields become saturated with magnetism, and the number of lines do not increase at such a rapid rate; finally, both the E. M. F. and the current in the field become constant.

38. The difference of potential between the brushes of shunt dynamos gradually decreases as the current from the armature becomes stronger, on account of the internal resistance of the armature conductors and the reactions of the current on the field. The effect is even more marked than in separately-excited dynamos, because a decrease in the difference of potential between the brushes causes a corresponding decrease on the field terminals, thereby weakening the current in the magnetizing coils. In order to

compensate for the decrease in the E. M. F., a field rheostat r of comparatively high resistance is connected in the field circuit, and so adjusted that when no current is flowing in the external circuit only enough current flows through the field to produce the normal difference of potential between the brushes; this normal difference of potential between the brushes is kept constant, as the load increases, by gradually cutting out, or short-circuiting, the resistance coils of the rheostat.

NOTE.—The word *load* as used above is a common expression for *current* in dynamos generating a constant potential, and the student should become familiar with its use.

39. The third class of machines whose field-magnets are excited by an electric current are termed **self-exciting series dynamos,** or simply **series dynamos.** The magnetizing coils of a series dynamo are connected directly in *series* with the external circuit; that is, all the current from the armature circulates around the magnetizing coils and flows through the external circuit. The connections of a *series* dynamo are shown in Fig. 41. The current starts from the positive brush $+B$, circulates around the external circuit Re, from thence through the magnetizing coils back to the negative brush $-B$. The action of a series dynamo differs widely from that of a shunt dynamo. In the first place, no E. M. F. is generated in the armature unless the external circuit is closed and a current flows from the brushes, that is, neglecting the small E. M. F. generated by the residual magnetism. In the second place, the difference of potential between the brushes depends upon the strength of current flowing from the armature. The E. M. F., however, is not directly proportional to the

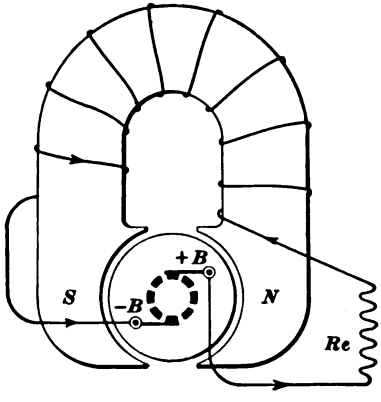

FIG. 41.

strength of the current unless the internal resistance and reactions of the armature are negligible. Compared with the coils on a shunt dynamo, the magnetizing coils of a series dynamo are made of a few turns of a large conductor. This is necessary, because the coils usually are required to carry the total current from the armature; the conductor is made large to carry the current without heating, and only a few turns are used to secure the proper degree of magnetization, since that is proportional to the *ampere-turns*.

40. The E. M. F. of a series dynamo may be regulated in three different ways, viz.: (1) By controlling the strength of current in the external circuit as previously described; (2) by *short-circuiting*, or *cutting out*, part of the magnetizing coils; and (3) by *shunting* part of the current around the magnetizing coils.

The second of the above methods of regulating the E. M. F. will be understood from the diagram in Fig. 42. *S F* represents the magnetizing coils. *A* is a contact arm which travels in either direction along the line *x y*, one end making contact with the ends *a*, *b*, *c*, *d*, etc. of the series field, and the other being always connected to the external circuit *Re*. As the arm is moved towards *x*, the turns between it and *k* are cut out of circuit; that is, the current from the armature circulates around only those coils between the arm and *a*; if the strength of the current remains constant, the magnetizing force is thereby reduced. On the contrary, when the arm is moved towards *y*, additional turns are connected in circuit, and the magnetizing force is increased.

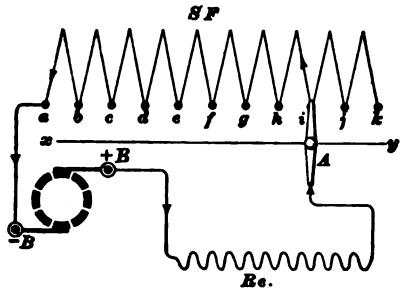

FIG. 42.

41. The third method of regulating the E. M. F. of a series dynamo changes the strength of the magnetizing current instead of varying the number of turns in the coil.

This effect is accomplished by connecting a resistance R, Fig. 43, in parallel or shunt with the series field coils SF, the current dividing between the two circuits inversely proportional to their separate resistances. Consequently, to

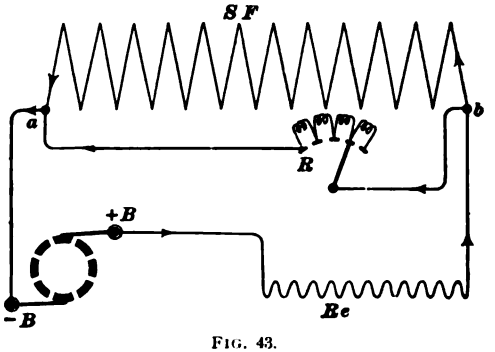

FIG. 43.

increase the magnetizing force on the field-magnets, the resistance R of the shunt circuit is increased, and *vice versa*. The total current from the armature is made to pass through the magnetizing coils by opening the shunt circuit entirely.

42. In the dynamo previously described, the regulation of the E. M. F. is not automatic; it is accomplished by a mechanical movement of an arm or contact. This movement is sometimes imparted by a magnet controlled by the current from the armature, but more often the E. M. F. is automatically regulated in the dynamo itself by a combination of the *shunt* and *series* magnetizing coils. Such machines are termed **compound**, or **shunt-and-series**, dynamos. In Fig. 44, the shunt coils consist of a large number of turns of fine insulated wire wound upon the core of the magnet.

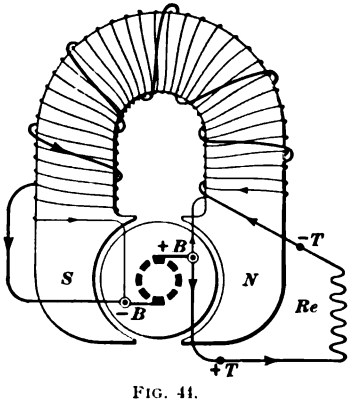

FIG. 44.

The series coils, consisting of a few turns of large insulated wire, are wound over the shunt coils. The main part of the current from the armature flows from the positive brush $+B$, through the external circuit Rc, thence through the series coils to the negative brush $-B$. The two terminals of the shunt coils are connected to the two brushes $+B$ and $-B$, respectively. But the series and shunt coils are so wound that the currents in both circulate around the core of the magnet in the same direction when connected, as shown in the diagram. The action of both currents, therefore, is to produce the same polarity in the magnet, the shunt current being reenforced by the series current. When the dynamo is not loaded, that is, when no current is flowing in the external circuit, and the armature is rotated at normal speed, the normal E. M. F. is generated in the armature due to the magnetic field produced by the shunt coils alone. Upon closing the external circuit, however, the difference of potential between the brushes *tends* to decrease, and would continue to decrease, as previously described in a simple shunt machine, if the series coils were neglected. The current circulating through these, however, reenforces the magnetizing force of the shunt coils, and immediately increases the number of lines of force in the field, which, in turn, raise the difference of potential between the brushes to normal. These actions are produced simultaneously, and, to all appearances, the difference of potential between the brushes remains normal for all changes of load in the external circuit. This method of regulating the E. M. F. of a dynamo is called **compounding.** The **terminals** of a dynamo are the binding-posts to which the external circuit is connected; in a series, or compound, dynamo one terminal is attached to the outside end of the series coils, as $-T$ in Fig. 44, and the other terminal is connected directly to the brush, as represented by $+T$ in the figure. It is desirable in a great many cases to **over-compound** a dynamo, or, in other words, to wind a sufficient number of turns on the series coils so as to increase the difference of potential between the terminals

of a dynamo above normal when the load increases. The expression **per cent. over-compound** means that the difference of potential between the terminals increases a given

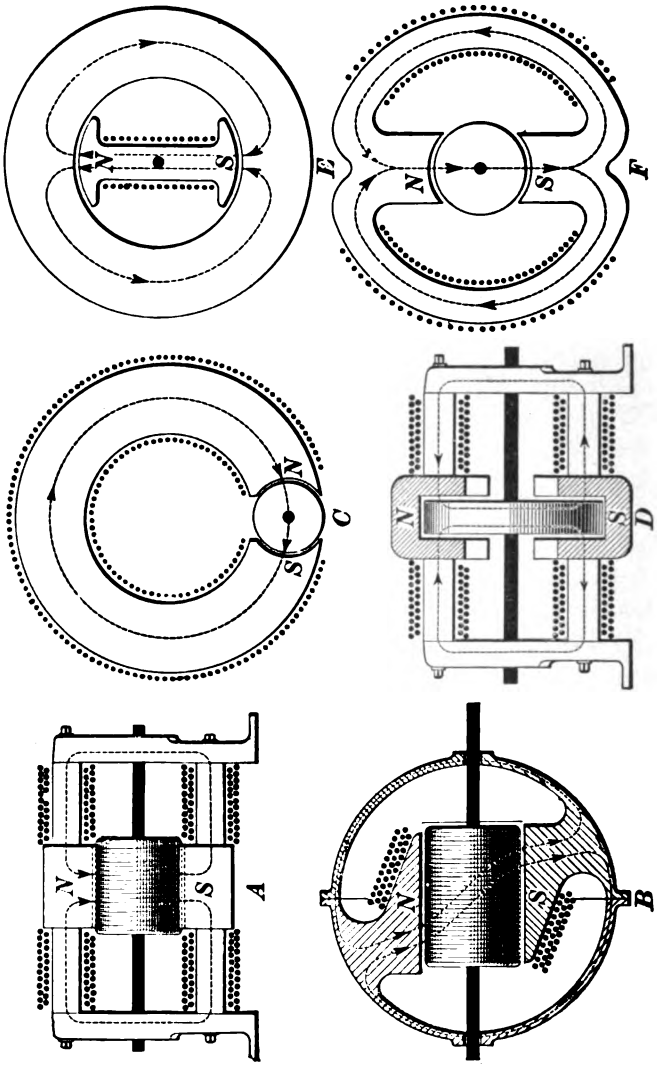

per cent. of the normal when the load is at a maximum. For example, supposing the normal voltage of a dynamo is

500 volts, and it is 10% over-compound at full load; the difference of potential between the terminals of the machine at full load is, therefore, $500 + (500 \times .10) = 550$ volts.

In some cases it is an advantage to connect the shunt

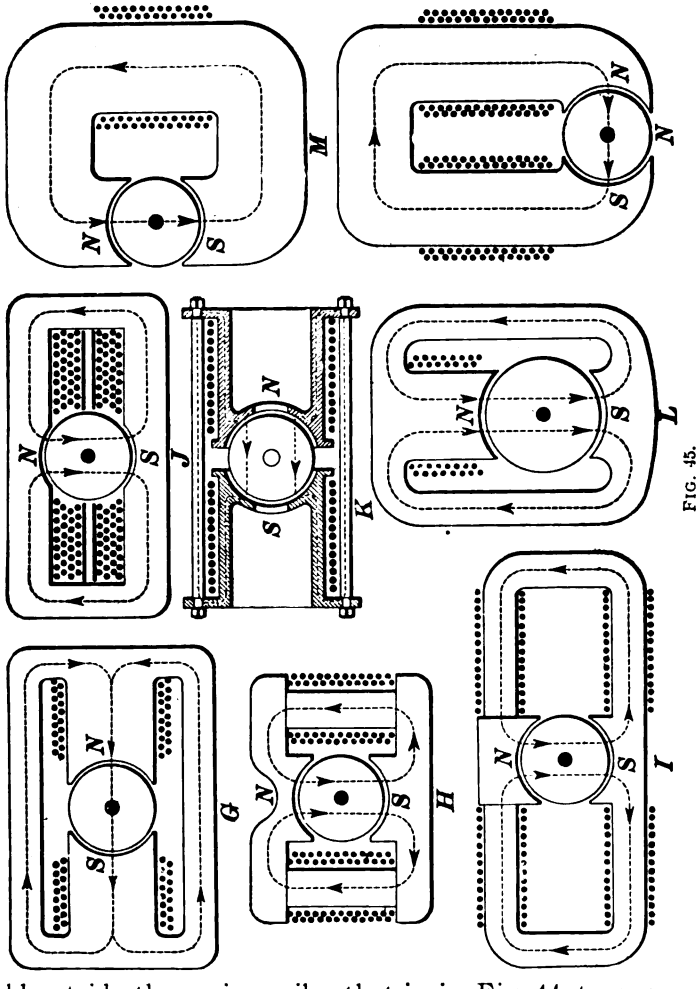

FIG. 45.

field outside the series coils; that is, in Fig. 44, to connect the negative end of the shunt coil to the negative terminal $-T$, instead of being connected to the negative brush $-B$. This connection is seldom used in practice.

TYPES OF BIPOLAR FIELD-MAGNETS.

43. The various types of field-magnets for dynamos in which the armature revolves between only one pair of poles are shown in Fig. 45. It is customary to speak of such machines as **bipolar dynamos,** from the fact that only one pair of poles is presented to the armature. The broken lines and arrow-heads in each of the separate cuts represent the paths of the lines of force which must pass lengthwise through the coils from the north pole to the south pole. The black dots indicate a cross-section through the wires which form the coils.

Field poles are distinguished as follows with respect to the coils producing them: (*a*) **Salient poles;** (*b*) **Consequent poles.**

In all cases where a single coil is used, or where, if two coils are used, they are wound so as to produce unlike poles at their free ends, the poles are called salient poles. When two coils are used and wound so as to make their adjacent poles similar, the resultant poles are called consequent poles.

Referring to Fig. 45, salient poles exist in fields *B*, *C*, *G*, *J*, *K*, *L*, *M*, *N*, and consequent poles in *A*, *D*, *E*, *F*, *H*, *I*. The adjacent coils in *A*, Fig. 45, have their adjacent poles at *N* and *S* similar. Were these poles opposite, the magnetic flux would circulate around the magnets without passing through the armature.

TYPES OF DYNAMOS.

44. Dynamos are divided into three general types, depending on the character of their currents. These three types are:

1. **Constant-potential dynamos,** in which the E.M.F. remains constant and the strength of current (continuous) changes with the load or external resistance.

2. **Constant-current dynamos,** in which the strength of current (continuous and pulsating) remains constant and the E. M. F. changes with the load.

3. **Alternating-current dynamos,** the current from which alternates or reverses direction with great rapidity and whose E. M. F. is constant. In ordinary alternating-current dynamos the reversals average generally either 7,200 or 16,000 per minute.

NOTE.—A dynamo which generates current for power purposes has been conventionally termed a *generator*, to distinguish it from a machine for lighting.

CONSTANT-POTENTIAL DYNAMOS AND GENERATORS.

45. The foregoing articles have demonstrated the principle and regulation of constant-potential dynamos, but only one form has been considered, namely, a dynamo in which a ring or drum armature is rotated between only one pair of poles from a U-shaped magnet. Theoretically, however, constant-potential dynamos can be built with one armature revolving between any number of pairs of poles, although in practice eight pairs of poles are seldom exceeded. Machines having more than one pair are called **multipolar dynamos.**

In multipolar dynamos the pole-pieces and field cores are fastened into one magnetic yoke, more or less circular in shape, as shown in Fig. 46, which represents the magnetic circuits of a four-pole dynamo. A magnetizing coil is wound upon each field core, and the four coils are connected in series in

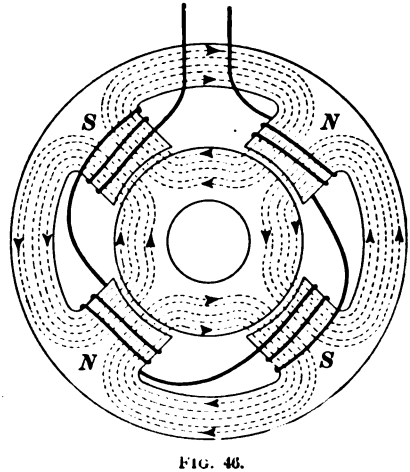

FIG. 46.

such a manner that when a current circulates around the coil, it produces first a north pole and then a south pole. The lines of force from each field core divide into two magnetic circuits in the yoke and armature, as represented in the diagram. Their density is practically uniform, however, where they pass from the north pole into the armature core, or from the armature core into the south pole. In nearly all multipolar dynamos this same principle of polarity is applied, that is, every *other* pole is of like polarity, and lines of force from each core divide into two magnetic circuits, in the armature and in the field yoke.

46. The process of generating an E. M. F. is similar to that in bipolar machines, but there are some points which

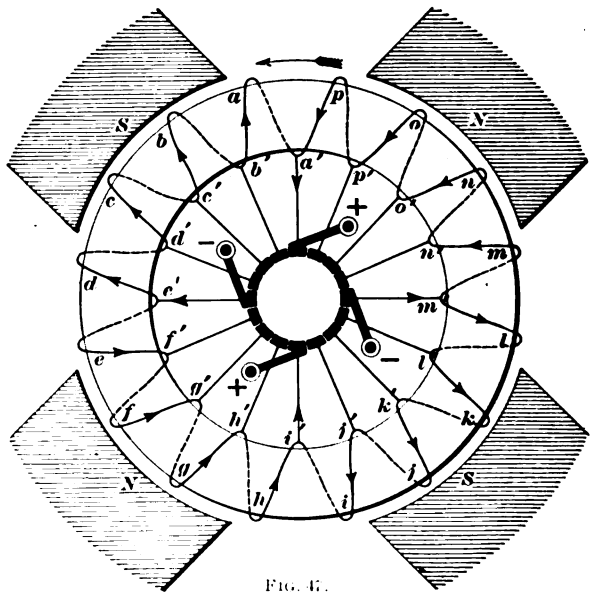

FIG. 47.

should be understood. Consider first the case of a ring core with a closed-coil winding as shown in the diagram, Fig. 47. If the armature is rotated in the direction of the large arrow, the E. M. F. generated in the conductors in front of the south poles will tend to act downwards along the face of the pole, while that generated in front of the north pole will

tend to act upwards. By tracing out, by aid of the small arrow-heads on the conductors, the direction in which the E. M. F. acts, it will be seen that there are four points where the E. M. F. acts in opposite directions. The action of the electromotive forces is to meet at a' and i' and to divide at e' and m'. The segments connected to a' and i' have the same potential and form two *positive* neutral points of the commutator; the segments connected to e' and m' have the same potential and form two neutral points of the commutator. Hence, four brushes are necessary—two positive and two negative. The current is obtained from the armature by connecting the two positive brushes in parallel to one terminal of the external circuit, and the two negative brushes to the other terminal, as shown in Fig. 48. The currents from the positive brushes unite to form the current in the external circuit and divide again between the negative brushes. The current in the armature is divided into four circuits in parallel instead of two, as in bipolar dynamos, and the maximum E. M. F. that is obtainable from the brushes is equal to that generated by the active conductors in one of the circuits only. For example, the difference of potential between the positive and negative brushes in Fig. 47, when no current is flowing, is equal to the E. M. F. generated in one-quarter of the outside wires on the core; or, in other words, the total E. M. F. of the armature is proportional to the number of outside wires connected in series.

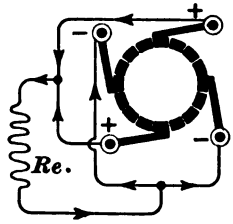

FIG. 48.

The current in a ring armature wound and connected in this manner, if placed in a field-magnet of six poles, would divide into six circuits in parallel; if the armature is placed in a field-magnet of eight poles, the current would divide into eight circuits in parallel, and so on. An armature winding of this character is called a **parallel,** or **multiple, winding,** since the current divides into as many circuits in parallel as there are poles in the field-magnet.

47. It is possible, however, to connect and group the conductors in an armature for a multipolar dynamo so that

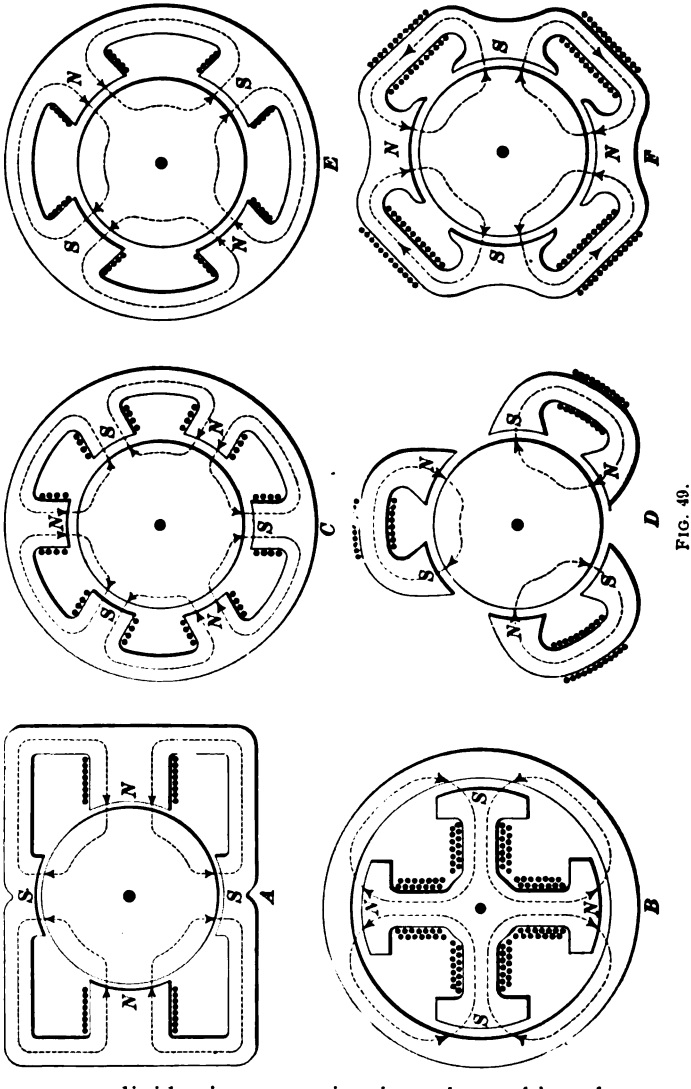

FIG. 49.

the current divides into two circuits only, making the number of active conductors in series equal to one-half the total

number of outside wires on the core. This armature winding is termed a *series winding*, since one-half of the total outside wires is the largest possible number that can be connected in series and produce a continuous current.

There are many different methods of connecting and winding armatures for generating a continuous current, the method used depending upon the character of the current and E. M. F. desired. Drum windings as well as ring windings are connected in a variety of ways for multipolar and bipolar dynamos, but the principle of commutation and generation of E. M. F. does not differ from that previously described; the E. M. F. is always proportional to the number of outside or active wires connected in series.

48. The regulation of multipolar dynamos for constant potential is accomplished by the changing of the strength of the magnetizing force, as in the bipolar machines. In a compound dynamo the series coils are wound on each field core and all connected together in parallel or series, whichever is more expedient.

49. Types of Multipolar Field-Magnets. — The various types of multipolar field-magnets are shown in Fig. 49. Consequent and salient poles are used as in bipolar field-magnets, but the type generally employed has salient poles alone, as in *C* and *E*. *A* embodies both consequent and salient poles. In *B* the field-magnet is surrounded by the armature and is known as an *internal-pole* dynamo. The field of this dynamo revolves, and the armature is kept stationary. The armature in all cases is that part of a dynamo in which the current is generated. Each type of field-magnet in the above figure has its own special advantages, but all represent good design.

50. Mechanical Construction. — Heretofore, only the principles of a dynamo have been considered; its mechanical construction in detail depends upon the requirements of the machine and upon the originality and taste of the designer. A few general remarks, however, on the construction of the principal parts of the machine are necessary

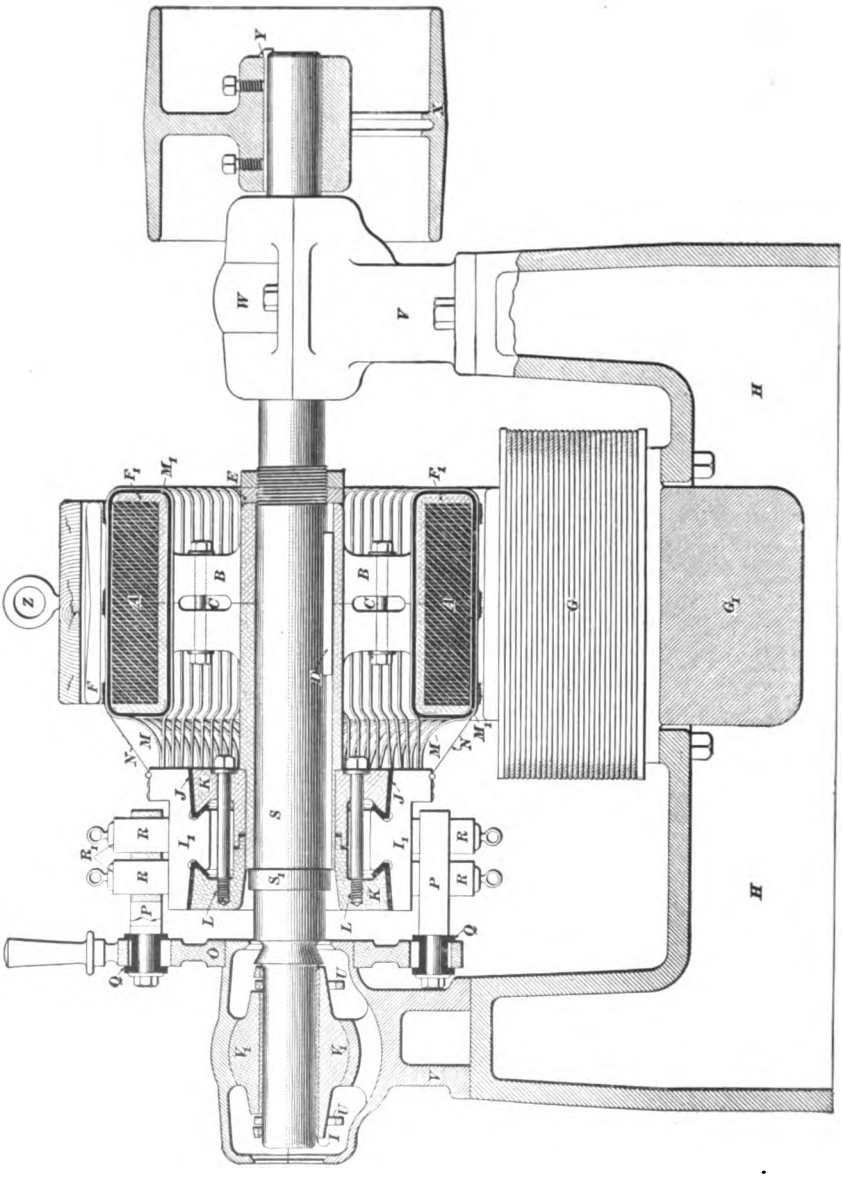

FIG. 50.

to give the student a clear conception of a complete dynamo ready for operating.

The mechanical construction of a typical bipolar dynamo is shown in Fig. 50, which is a vertical section taken along the center of the armature shaft. The parts of the machine shown in the figure are lettered, and the names of the parts corresponding to the letters are as follows:

A = Armature core, which may be either punchings from sheet iron or built up of fine annealed iron wire.
B = Armature spider for connecting core to shaft.
C = Armature spider bolts.
D = Armature key for fastening spider to shaft.
E = Armature lock-nut.
F = Pole-piece.
G_1 = Magnetic yoke.
G = Magnetizing or field coil.
H = Frame.
I_1 = Commutator bars or segments.
J = Commutator insulation.
K = Commutator shell or body, and rings for holding commutator segments in place.
L = Bolt for clamping commutator frame.
M = Armature leads, connecting armature winding to commutator.
N = Armature dressing or covering.
O = Rocker-arm or brush-holder yoke.
P = Brush holder.
Q = Insulating bushings.
R = Carbon brushes.
R_1 = Carbon-brush hammers.
S = Shaft.
I = Bearing or brass.
U = Oil-rings.
V = Standard.
W = Cap for standard.
} Complete outfit called pillow-block.
X = Pulley.
Y = Key for pulley.
Z = Eye-bolt.

51. Frame.—The frame is made up of two castings; the upper one forms the magnetic yoke G_1 and pole-pieces F, and is bolted to the lower one H, which forms the base and is extended on either side to support the standards V, V. The pole-pieces are bored out to admit the armature core when wound; the standards are bolted to the base casting, and are so adjusted as to allow the armature core to revolve centrally between the pole-pieces. The magnetizing or field coils G, only one of which is shown in this cut, are wound on separate bobbins or spools, and one is slipped over each pole-piece.

52. Armature.—As generally used, the word **armature** includes the wound core and commutator mounted on the shaft ready for operating. In Fig. 50, the armature spider B is made in two halves; each half is provided with flanges F_1 at the ends to hold the disks or sheets of iron A in place. The disks are punched in circular rings from thin sheet iron annealed, and a large number are slipped over each half of the spider, which is then bolted together by long spider bolts C as shown. The spider usually has three or four arms joining the flanges to the hub, the armature conductors on the inside of the ring, in case of ring winding, being wound between the arms. The hub of the spider is bored out to slip over a portion of the shaft S; it rests against a turned shoulder S_1, and is held in this position by the armature nut E. The spider and core are made to revolve with the shaft by the aid of a key or feather D, fitted into the spider hub and into the shaft. The core and spider are insulated by mica, cloth, paper, etc., M_1, and the armature conductors are wound on them in the manner previously described, with armature leads properly connected to the winding at suitable places. After the core has been wound and the leads connected to the commutator, the winding is sometimes covered or dressed with cloth of suitable texture to prevent flying particles and dust injuring or short-circuiting the coils. The armature leads should be made of a flexible conductor or cable, insulated from one another with

cotton or rubber tape; an electrical contact of two leads will short-circuit and burn out the intervening coil. It is sometimes the practice to use the armature conductors themselves for leads by looping the conductor and connecting the end of the loop to the commutator. This is bad practice, however, and, except for small dynamos, ought not to be followed. A large solid copper wire is liable to become crystallized by the repeated vibration of the machine, and will eventually give way.

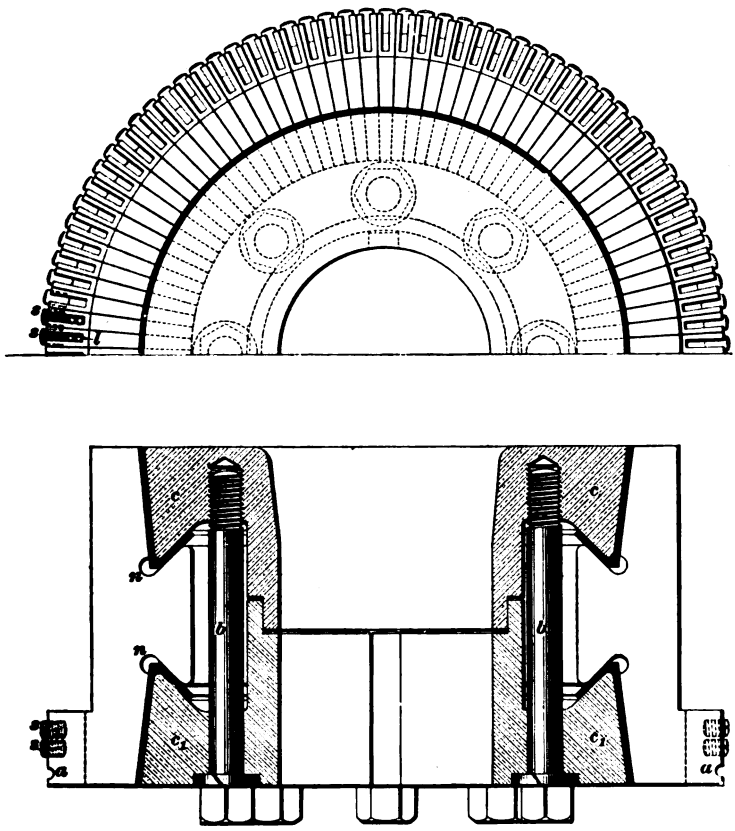

FIG. 51.

53. Commutator.—Every maker of dynamos has a special design of commutator, but all embody the same

general construction. Fig. 51 shows two enlarged views of a commutator such as is shown in place in Fig. 50. It will be noticed that the segments are broader on the outside of the commutator than near the center, thus providing for an equal thickness of insulation between all parts of adjacent bars. A portion *a* of each segment projects above the general level of the commutator surface, and is provided with a slot into which the armature leads are securely fastened by screws *s*, *s*, as shown at *l*. Sometimes the leads are soldered to the segments. The method of clamping and securely holding the segments is shown in the lower view. The commutator shell, it will be seen, consists of two rings *c c* and c_1 c_1, clamped together by bolts *b*, *b*. The notches *n* in the segments fit over corresponding projections on the rings, and as the bolts are tightened the segments are drawn firmly against the insulation which separates them. The commutator shell is usually made of brass, sometimes of cast iron. This shell is, of course, thoroughly insulated from the commutator segments. A key is fitted into the commutator shell and shaft to cause the commutator to turn with the shaft. The armature leads from the winding are soldered or screwed to ears or clips extending from each commutator bar, as shown by the cross-sectional view.

54. Brushes and Brush Holders.—In the cut of the machine in Fig. 50, the brushes shown are made of carbon and rub against the segments of the commutator radially, the pressure being regulated by a spring which is attached to a hammer pressing on top of the carbons. The carbons slide in slots in the brush holders, fitting snugly, with but little play or lost motion sideways. Both brush holders are provided with studs which pass through holes in the rocker arm, each stud being insulated from the arm by insulating bushings, as shown in the cross-sectional view. The rocker arm is fitted over the journal-box, and can be rocked or rotated to change the position of the brushes on the commutator as the position of the neutral points changes when the load is varied. This action is usually accomplished by a

handle attached to the rocker arm; and a thumb or set screw is provided to hold the rocker arm in position when properly adjusted. The current is taken from the brushes by a cable or flexible conductor connected to the brush holder, generally by the use of a small cable clip surrounding the stud. On a large class of dynamos it is customary to use copper brushes; that is, brushes made either of copper leaves, strips, wires, or gauze. Such brushes are built in a great variety of ways, and on constant-potential machines are generally used where the E. M. F. does not exceed 125 volts.

55. Journals or Bearings.—The armatures of most dynamos are generally driven at a high speed compared with the average rotating machinery, and hence it is important that the journals or bearings should be of the best design possible. In the dynamo shown in Fig. 50 the bearings are called **self-aligning** boxes; that is, the linings are allowed to find their own alignment with the shaft. This is accomplished by turning a spherical surface V_1 around the center of the lining, and turning the cap and standard to match, as shown in the cross-sectional view. The linings I in such a bearing are usually made of some composition metal, as bronze or gun-metal, for small machines; on large machines the linings are made of cast iron covered on the inside with babbitt metal.

The best practice in lubricating high-speed journals in dynamos is to make the bearings *self-oiling* or *self-lubricating;* that is, to design the bearings with a reservoir of oil below the journal, using some device to carry the oil from the reservoirs to the top of the journal, from whence it flows around the journals and drops back into the reservoirs again. This method produces a constant circulation of oil around the journals and allows the oil to be used over and over again.

A good method of automatically oiling or lubricating bearings on journals is shown in the cross-sectional view in Fig. 50. Two slots are cut across the top of each lining,

permitting two circular *oil-rings U* to rest upon the journals of the shaft; the diameters of the rings are made large in comparison with the diameter of the shaft, and their lower parts dip into the reservoirs of oil. When the shaft is rotated, the friction between it and the inside of the oil-rings causes the latter to revolve, thus carrying the oil which adheres to the bottom part of the rings to the top of the journal, where it finds its way between the linings and the shaft.

In general, any freely lubricated journals can be used in dynamos or generators.

56. Driving Mechanism.—The armatures of nearly all dynamos are driven in one of the following ways: (1) By using a flat belt passing over a pulley on the armature shaft. (2) By using several ropes, side by side, running in a grooved pulley. (3) By connecting the armature directly to the crank-shaft or shaft of the driving machine, which, in most cases, consists of a steam-engine, steam turbine, or water-wheel. In any of the above methods, the driving mechanism should be amply capable of transmitting the total output of the dynamo with a suitable factor of safety.

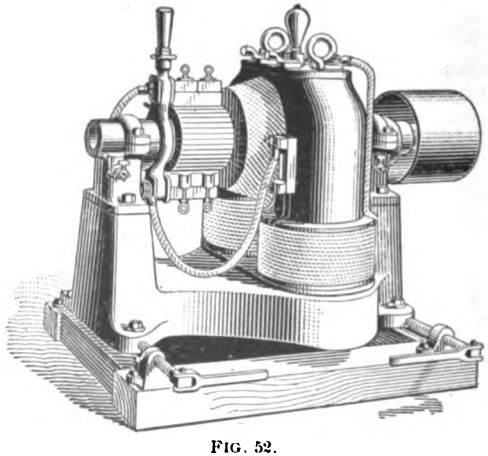

FIG. 52.

57. A perspective view of the bipolar dynamo just described is shown in Fig. 52. In the cut the machine is

represented as ready for operating, and is mounted upon sliding rails which are attached to the wooden *bed-plate*. Two adjusting screws, one on each side of the machine, are used to move the dynamo along the rails, thereby loosening or tightening the belt as the circumstances may require. The current passes from the brush holders through flexible copper cables to two terminals fastened to, but insulated from, the pole-pieces; from the terminals the current passes through the series winding on the field or magnetizing coils, and thence to a small connection board on the top of the pole-pieces. An incandescent lamp is connected between the main terminals of the connection board, and is used to indicate when the machine is generating its normal E. M. F. A lamp used for this purpose is usually called a **pilot lamp.**

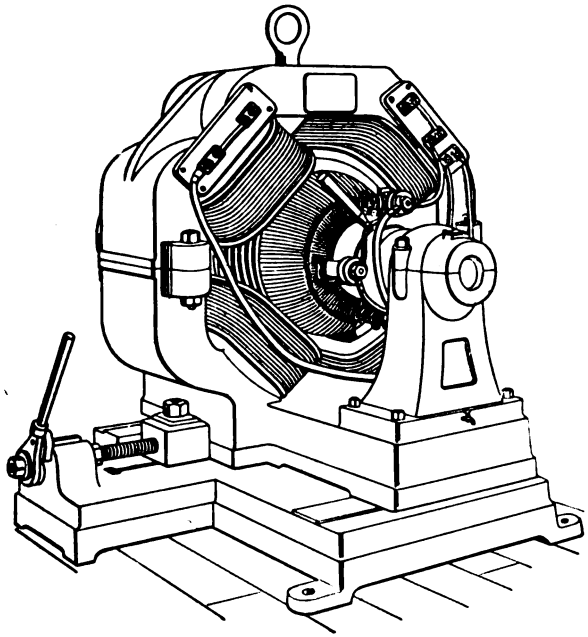

FIG. 53.

58. A multipolar dynamo for developing a constant potential and ready for operating is shown in Fig. 53. In this machine the frame is made of two main castings; one

consisting of the upper magnetic yoke and two pole-pieces, and the other consisting of the lower magnetic yoke and two pole-pieces, from which project two extensions for supporting the pillow-blocks. The dynamo slides upon a cast-iron bed-plate, and adjustment is made by a screw, as in the case of the bipolar dynamo.

The two dynamos previously described are illustrations taken from actual practice, and embody some special features which are not found in other machines of the same character; they were selected, however, on account of their simplicity, to convey to the student a general idea of how electrical principles are combined with mechanical construction.

EFFICIENCY OF CONSTANT-POTENTIAL DYNAMOS.

59. As previously stated, a dynamo is a machine for converting or transforming mechanical into electrical energy. In any transformation of energy, the total amount of energy is constant; when energy which is manifested in one form disappears, the same quantity will always appear again in another form or in several other different forms. This action is exactly that which takes place in a dynamo. A certain amount of mechanical energy is delivered to the armature shaft of the dynamo by a belt or some other transmitting device; a large portion of the energy is converted into electrical energy in the armature conductors, and is transmitted to the external circuit, while the rest of the energy, usually the smaller portion, is converted directly or indirectly into heat energy in the different parts of the dynamo itself. The amount of energy delivered to the armature shaft is always equal to the energy appearing in the external circuit from the brushes, plus the energy converted into heat in the dynamo itself.

In a dynamo the mechanical energy delivered to the armature shaft is usually called the **input**; the electrical energy appearing in the external circuit from the brushes is called the **output**, and the energy converted into heat directly or

indirectly in the dynamo itself is termed **energy losses,** or simply **losses.** This last term is not a strictly true one; for the energy converted into heat in the dynamo is lost only in relation to its utility—it can not be utilized to an advantage, and if too intense, endangers the life of the machine.

From what has been stated, it will be seen that the *input* of a dynamo is always equal to the *output* at the brushes, plus the *losses* in the machine itself; or, in other words, the losses in the dynamo are equal to the difference between the *input* and the *output.* It is assumed in the above statement that the *input*, *output*, and *losses* are reduced to the same units. For example, suppose that 20 horsepower is delivered to the armature shaft of a dynamo where the *output* from the brushes to the external circuit is 13,428 watts. Reducing the 20 horsepower to watts gives $20 \times 746 = 14{,}920$ watts; hence, the losses in the dynamo are equal to the difference between the input of 14,920 watts and the output of 13,428 watts, or $14{,}920 - 13{,}428 = 1{,}492$ watts.

60. It is more convenient, however, to express the relation of the *input*, *output*, and *losses* of a dynamo in percentage; that is, the output as well as the losses may be expressed as a certain per cent. of the input. The relation of the input to the output of a dynamo, expressed in percentage, is termed the **efficiency** of the machine.

Let I = the input of a dynamo;
O = the output;
E = the per cent. efficiency.

Then, the per cent. efficiency of a dynamo may be found by the formula

$$\mathsf{E} = \frac{100 \times O}{I}. \qquad (2.)$$

That is, *to find the per cent. efficiency of a dynamo, divide the output in watts by the input in watts and multiply by 100.*

For instance, in the above example, the efficiency, by formula **2,**

$$\mathsf{E} = \frac{100 \times 13{,}428}{14{,}920} = 90 \text{ per cent.}$$

61. The relation of the input to the heat losses in a dynamo, expressed in percentage, is termed the **per cent. loss.**

Let L = per cent. loss.

Then, the per cent. loss in a dynamo may be found by the formula

$$L = \frac{100\ (I - O)}{I}. \qquad \textbf{(3.)}$$

That is, *to find the total per cent. loss in a dynamo, divide the difference between the input and the output in watts by the input in watts and multiply by 100.*

EXAMPLE.—(*a*) What is the per cent. efficiency of a dynamo if 10 horsepower is delivered to the armature shaft and the output from the brushes is equivalent to 6,341 watts? (*b*) What is the total per cent. loss in the dynamo when running under these conditions?

SOLUTION.—Reducing the input of 10 H. P. gives $10 \times 746 = 7{,}460$ watts input. (*a*) By formula **2**, the efficiency

$$\mathbf{E} = \frac{100 \times 6{,}341}{7{,}460} = 85 \text{ per cent.} \quad \text{Ans.}$$

(*b*) By formula **3**, the total loss

$$L = \frac{100\ (7{,}460 - 6{,}341)}{7{,}460} = 15 \text{ per cent.} \quad \text{Ans.}$$

The efficiency of a dynamo depends upon its character, construction, condition when tested, its capacity (or output), losses, and various other conditions; in fact, two dynamos of the same construction and capacity seldom show exactly the same efficiency. The following list, however, will give the student a general idea of the approximate per cent. efficiencies which should be obtained from constant-potential machines of different capacities, or outputs, under ordinary conditions met with in practice:

From 750 to 1,500 watts output inclusive, about 75% efficiency.

From 3,000 to 5,000 watts output inclusive, about 80% efficiency.

From 7,500 to 10,000 watts output inclusive, about 85% efficiency.

From 15,000 to 100,000 watts output inclusive, about 90% efficiency.

From 150,000 watts output and upwards, from 91 to 93% efficiency.

The method of actually testing a dynamo to find its efficiency and losses is beyond the scope of this paper; the above, however, will serve as a guide to the student when computing the necessary power required to drive dynamos of different capacities or outputs.

62. When the output of a dynamo and its corresponding efficiency are given, the input necessary may be found by the formula

$$I = \frac{100 \times O}{E}. \qquad (4.)$$

That is, *the input necessary to drive a dynamo, when its output and efficiency at that output are given, is obtained by dividing the output by the per cent. efficiency and multiplying the quotient by 100.*

EXAMPLE.—The efficiency of a constant-potential dynamo is found to be 85% when giving an output of 6,341 watts; find the input in horsepower necessary to drive its armature shaft under these conditions.

SOLUTION.—By formula **4**, the input necessary $I = \frac{100 \times 6{,}341}{85} =$ 7,460 watts. The equivalent of 7,460 watts in horsepower is $\frac{7{,}460}{746} =$ 10 horsepower, which is the power required to drive the armature shaft of the dynamo under the stated conditions. Ans.

63. When the input of a dynamo and its corresponding efficiency are given, the output may be found by the formula

$$O = \frac{I E}{100}. \qquad (5.)$$

That is, *the output of a dynamo, of which the input and the efficiency at that input are given, is obtained by multiplying the input by the per cent. efficiency and dividing by 100.*

EXAMPLE.—An input of 35 horsepower is delivered to the shaft of a dynamo; if its efficiency at that input is 89.5%, find its output in watts.

SOLUTION.—The equivalent of 35 horsepower is $35 \times 746 = 26{,}110$ watts. By formula **5**, the output of the dynamo under these conditions, $O = \frac{26{,}110 \times 89.5}{100} = 23{,}368.45$ watts. Ans.

64. The total loss of power in a dynamo can be separated into smaller losses, depending upon the manner in which the loss is produced and the part of the dynamo in which it occurs. In ordinary cases, all the losses will come under one of the following heads:

1. Mechanical-friction loss.
2. Core loss.
3. Field loss.
4. Armature loss.

Friction Losses.—The larger part of the loss due to mechanical friction takes place between the bearings and journals. The brushes rubbing on the commutator produce some friction and consequent loss, but the amount is small, and in most cases need not be considered. The per cent. of power lost in mechanical friction necessarily depends upon the construction and condition of the bearings and journals, upon the size of the machine, and, to some extent, on the method of driving the armature shaft. Under ordinary conditions, the loss in mechanical friction should not exceed 5% of the input of dynamos from 1,500 up to about 10,000 watts output, and 3% of the input of dynamos from 15,000 to 100,000 watts output. For example, suppose that a dynamo has an efficiency of 88% at its rated output of 22,000 watts, and a test shows that 2.5% of the input is lost in mechanical friction. The total loss in the machine is $100 - 88 = 12\%$, of which 2.5% is lost in friction; the remaining 9.5% loss is due to other causes. The total input to the machine, from formula **4**, is $\frac{22{,}000}{88} \times 100 = 25{,}000$ watts; hence, the power lost in friction is $\frac{25{,}000 \times 2.5}{100} = 625$ watts.

65. Core Losses.—The **core loss** is the energy converted into heat in the iron disks of the armature core when they are rotated in the magnetic field. A small portion of this loss is due to eddy currents generated in the revolving core disks, as explained in Art. **16**; the larger portion of the loss is due to a *magnetic friction* which occurs whenever the direction of the lines of force is rapidly changed in a magnetic substance. When the magnetism of an electromagnet is rapidly reversed—that is, when the direction of the lines of force is suddenly changed several times in rapid succession by reversing the direction of the magnetizing current—the iron or steel in the core becomes heated, which necessitates a certain amount of energy being expended. This effect is due to a kind of internal *magnetic friction* by reason of which the rapid changes of magnetism cause the iron to grow hot. This effect is called **hysteresis.**

The energy expended by hysteresis is furnished by the force which causes the change in the magnetism, and in the case of an electromagnet where the magnetism is reversed by the magnetizing current being reversed, the energy is supplied by the magnetizing current.

The same effect is produced when the iron of the armature core is rapidly rotated in the constant-magnetic field of the dynamo; this case differs from the electromagnet only in the fact that the magnetic lines of force remain at rest and the iron core is made to rotate. Since the core is rotated from the armature shaft, the energy lost in hysteresis is furnished by the force which drives the shaft.

The loss of energy due to hysteresis depends (1) upon the hardness and quality of the magnetic substance in which the magnetic change takes place, (2) upon the amount of metal in which the reversal takes place, (3) upon the number of complete reversals of magnetism per second, and (4) upon the maximum density of the lines of force in the metal. Building the core of iron disks does not affect the hysteretic loss; it only reduces the eddy currents. Hysteretic loss is greatly reduced by using soft annealed iron, which exhibits only slight traces of residual magnetism;

for where the residual magnetism is large, the loss due to hysteresis is large in proportion. The hysteretic loss increases in a certain ratio with the magnetic density and the number of reversals per second; hence, these quantities are kept within reasonable limits. In well-designed dynamos the magnetic density in the armature rarely exceeds 85,000 lines of force per sq. in., and the maximum number of complete reversals of magnetism in the armature core is about 133 per second. In bipolar dynamos the number of complete reversals of magnetism in the armature is equal to the number of revolutions per second at which the armature shaft is driven; in multipolar machines the number of reversals is equal to the number of revolutions of the armature shaft, multiplied by the number of *pairs of poles*. For example, if the armature of a four-pole dynamo is driven at 600 revolutions per minute, or 10 revolutions per second, the number of complete reversals of magnetism in the armature core is $10 \times 2 = 20$ per second.

In a well-designed dynamo, the core loss, including eddy currents and hysteresis, should not exceed 2% of its input when delivering its rated output from the brushes.

66. Field Losses.—In self-exciting dynamos, a portion of the electrical energy generated in the armature is required to excite the field-magnets. This energy is considered as one of the losses of the dynamo, since it does not appear in the external circuit and it is entirely dissipated in the form of heat.

In a series-connected dynamo, where the total current from the armature passes through the magnetizing coils, the power in watts is equal to the square of the current, multiplied by the resistance of the series turns, as already demonstrated in formula **20,** Part 1. If, then, C is the total current from the armature, r is the total resistance of the series coils, and W is the watts lost in the series coils, then, $W = C^2 r$. For example, suppose that a series dynamo generates 200 volts between its terminals when a current of 100 amperes is flowing from its brushes through its series

coils and through the external circuit. The total output of the dynamo is, then, $100 \times 200 = 20{,}000$ watts. If the total resistance of the series coils is .1 ohm, then the number of watts (W') required to excite the field-magnets $= C^2 r = 100^2 \times .1 = 100 \times 100 \times .1 = 1{,}000$ watts.

67. In a shunt dynamo which generates a nearly constant potential for limited strengths of current in the armature, the field coils, as stated in Art. **36,** usually consist of a large number of turns of fine wire, offering a high resistance compared with the field coils of a series dynamo. The inside and outside ends of the shunt field coils are connected to the positive and negative brushes, respectively, of the dynamo in parallel with the external circuit, thereby allowing the full potential of the dynamo to act against the resistance of the coils. Then, from Ohm's law, the current in the shunt coil is equal to the electromotive force of the brushes, divided by the resistance of the coils. Let E_e represent the difference of potential between the brushes of the dynamo when running at normal speed and fully excited, let r_s represent the resistance of the shunt coils, and C_s represent the current in the shunt coils. Then, from Ohm's law, the current in the shunt coils is given by the formula $C_s = \frac{E_e}{r_s}$. For example, suppose that a shunt dynamo, when running at a constant speed, generates a constant difference of potential of 110 volts, and the resistance of the magnetizing coils from the positive connection to the negative connection is 55 ohms; or $E_e = 110$ volts and $r_s = 55$ ohms. Then, the current in the shunt coils would be given by substituting these values in the above formula, or $C_s = \frac{E_e}{r_s} = \frac{110}{55} = 2$ amperes.

This gives the strength of current in the shunt coils, but does not indicate the amount of power required to constantly excite the field-magnets. By formula **19,** Part 1, the power in watts, $W' = CE$; that is, it is equal to the current in amperes flowing through the shunt coils, multiplied by the difference of potential in volts between the terminals

of the shunt coils. We have found in this case that the current $C = 2$ amperes and the E. M. F. $E = 110$ volts; then, $W = 2 \times 110 = 220$ watts, which represents the power required to excite the field-magnets.

Since the power in watts can be expressed in terms of resistance and electromotive force, or resistance and strength of current, the number of watts dissipated in the shunt coil is also given by either formula **20** or **21**, Part 1.

All other conditions being similar, the same number of watts will be dissipated in a shunt field coil as in a series coil, provided an equal amount of magnetizing force is produced in the two cases.

68. In a compound-wound dynamo, the field loss consists of two losses, one in the series coil and the other in the shunt coil. The loss in the series coil depends upon the strength of current flowing from the dynamo, as in the case of a simple-series dynamo, while the loss in the shunt coil is constant, irrespective of the load on the machine; provided, of course, the dynamo generates a constant electromotive force for all loads. This can readily be understood from the following example: A dynamo is compounded to generate 220 volts between its terminals for all loads up to its rated capacity; that is, when the current from the armature becomes stronger and the difference of potential between the terminals tends to fall, the current in passing through the series coil strengthens the field-magnets sufficiently to keep a difference of exactly 220 volts between the terminals of the dynamo. Assume the resistance of the shunt coil to be 275 ohms and that of the series coil to be .055 ohm. At a rated output of 4,400 watts, the current flowing through the series coil and into the external circuit is $\frac{4400}{220} = 20$ amperes (assuming the connections are made for a *short shunt*). At all loads the current in the shunt coil is $C_s = \frac{E_e}{r_s} = \frac{220}{275} =$ .8 ampere, and the loss of power in the shunt coil is $W_s = E_e \times C_s = 220 \times .8 = 176$ watts; even when the external circuit is open the loss in the shunt coil remains constant, or

176 watts in this particular case. The loss in the series coil, however, varies directly with the square of the current passing through it. In this example, the loss in the series coil is $W = C^2 \times r = 20^2 \times .055 = 22$ watts; at half load, or 10 amperes, the loss is $W = 10^2 \times .055 = 5.5$ watts, etc.; at no load there is no current in the series coil, and, consequently, no loss. The total field loss in a compound dynamo is the sum of the losses in the series and shunt coils. For instance, in this example, the total field loss at full load is 198 watts; at half load, 181.5 watts, and at no load, 176 watts.

69. The amount of power lost or dissipated in the field coils of a dynamo depends (1) upon the capacity of the dynamo, (2) upon its design, and (3) upon the amount of copper used in the coils. In the last condition it is obvious that in order to produce a certain number of *ampere-turns*, the current in amperes required could be made exceedingly small by using a large number of turns of copper wire, thereby reducing the electrical loss. A limit is reached, however, where it is not economical from a commercial standpoint to increase the amount of copper in order to save in electrical loss.

The per cent. loss in the field coils of dynamos varies from about 10% of the input to dynamos having an output of about 1,000 watts to as low as 1.5% to 2% of the input to dynamos having an output of 100,000 watts and upwards. For example, suppose that the input to a dynamo from an engine was 100 horsepower and the loss in the field coils was 2.5%. Under these conditions, how many watts are lost or dissipated in the field coils? Changing the input from horsepower to watts gives $100 \times 746 = 74{,}600$ watts, since one horsepower is equivalent to 746 watts. Hence, the number of watts lost in the field coils is $74{,}600 \times .025 = 1{,}865$ watts.

70. Armature Losses.—The principal armature loss is that produced by the current in flowing against the internal resistance of the armature, that is, the resistance

of the armature *conductors*. The *core losses* previously described could also be classed as part of the armature losses, but it is usual to consider them apart. The armature loss proper is usually termed the **copper,** or **wire, loss,** since it is due to the resistance of the armature conductors, which are composed of copper wire or bars. The internal resistance of an armature is an exceedingly variable quantity, depending upon the form, construction, size, number of conductors, size of conductors, etc. In constant-potential dynamos, generally speaking, the internal resistance of the armature must necessarily be comparatively small, since it determines the maximum strength of current that can be obtained from the dynamo, as will be seen subsequently.

The armature loss depends upon the amount of internal resistance and upon the strength of current flowing through the armature conductors. In a given armature the internal resistance remains constant at equal temperatures, while the strength of current varies with the load upon the dynamo at that particular moment; in other words, this loss only occurs when there is a current flowing through the armature—the stronger the current, the greater is the loss, and *vice versa*. As previously shown (formula **20,** Part 1), in all cases where an electric current flows against the resistance of a conductor, the loss of power in watts is equal to the resistance of the conductor in ohms, multiplied by the square of the current in amperes; hence, in an armature the number of watts lost in the armature conductors is equal to the square of the current in amperes flowing through the armature, multiplied by the internal resistance in ohms of the armature from the positive to the negative brush. If C represents the total current in amperes flowing through the armature and r_i the internal resistance in ohms from the positive to the negative brush, then $W_i = C^2 r_i$, where W_i is the number of watts lost in the armature conductors. From this fact, this armature loss is also designated as the $C^2 r$ *loss*. For example, suppose that the internal resistance of an armature from brush to brush is .125 ohm, and a total current of 40 amperes is flowing through the

armature. Determine the number of watts lost in the armature. Using formula **20,** Part 1, let $C = 40$ amperes and $r_i = .125$ ohm; then, $W_i = C^2 r_i = 40^2 \times .125 = 200$ watts.

The per cent. loss in armatures of constant-potential dynamos varies from about 12% of the input to dynamos having a rated capacity of about 1,000 watts to as low as 1.5% to 2% of the input to dynamos having a rated capacity of about 100,000 watts and upwards. For example, suppose that a dynamo was working under a load which required 50 horsepower to run it, and, at this rating, the armature loss alone amounted to 3% of the input; determine the number of watts dissipated or lost in the armature conductors. Changing the input from horsepower to watts gives $50 \times 746 =$ 37,300 watts, since 746 watts are equal to one horsepower. The armature $C^2 r$ loss is, therefore, 3% of the input, or $37{,}300 \times .03 = 1{,}119$ watts.

71. Other Losses. — Aside from the four principal losses mentioned, other small losses occur in some machines when the armature is revolving. If large conductors are used in the winding of the armatures, a difference of potential is sometimes generated between the edges of the conductor in such a manner as to give rise to small eddy or local currents in the conductors themselves, and which do not appear in the external circuit and are useless. In some cases these local currents dissipate considerable energy and heat the armature badly when the machine is not loaded; but in a well-designed dynamo they are too small to be considered.

In an armature in which the conductors are wound in slots cut in the core disks, the teeth between the slots have a tendency to disturb the position of the lines of force where they enter and leave the polar faces. This movement causes local or eddy currents to be generated in the pole-pieces, thereby dissipating a certain amount of energy. These eddy currents in the pole-pieces are sometimes termed **Foucault currents,** in memory of the man who first recognized their existence. But, as in the previous case, a

well-designed dynamo will show but few traces of Foucault currents. Other local currents may occur in various parts of some dynamos on account of bad design, but it is only necessary here to treat specifically upon such losses as are common to all dynamos and impossible to eliminate.

72. From the four previous articles, the following summary will be a help to establish the rules of efficiency and losses:

Input = the power driving the dynamo, which is derived from some outside agency.

Output = input minus the total losses.

Total losses = the sum of the friction, core, field, armature, and other losses.

$$\textbf{Per cent. efficiency} = \frac{\text{input minus total losses}}{\text{input}} \times 100$$

or $\frac{\text{output}}{\text{input}} \times 100.$

$$\textbf{Per cent. loss in friction} = \frac{\text{friction losses}}{\text{input}} \times 100.$$

$$\textbf{Per cent. loss in core} = \frac{\text{core losses}}{\text{input}} \times 100.$$

$$\textbf{Per cent. loss in field} = \frac{\text{field losses}}{\text{input}} \times 100.$$

$$\textbf{Per cent. loss in armature} = \frac{\text{armature losses}}{\text{input}} \times 100.$$

THE OUTPUT OF CONSTANT-POTENTIAL DYNAMOS.

73. If a dynamo is so constructed as to give a constant potential at any load, it is evident that the current flowing is inversely proportional to the resistance of the external circuit; that is, if the external resistance is reduced, the amount of current will be correspondingly increased. There is a limit, however, to the amount of current that any given machine can give out, depending on one (or both) of two factors; namely, the **heating** and the **sparking.**

The heat that is being continually generated in the armature and field coils of a dynamo when working under load, due both to the $C^2 r$ *loss* and the *core loss*, is given off from the surface of the armature and of the whole machine to the surrounding air. This giving off of heat can only occur when the dynamo is hotter than the air, for if two bodies are equally hot, one can not give any heat to the other. Conversely, the greater the difference in temperature between two bodies, such as a dynamo armature and the surrounding air, the more heat will be given from the hot body to the cool.

74. When a dynamo is first started, it is at about the same temperature as the air, so that when the conductors in the armature begin to generate heat, this heat can not pass off to the air, but instead it raises the temperature of the armature, until it is enough hotter than the surrounding air to cause all the heat which is being generated to be given off.

If the amount of heat generated is practically constant, as will be the case if the load remains constant, the temperature of the armature will also remain constant, because the heat is given off as fast as generated; and if the load is increased so as to increase the amount of heat generated, the temperature will again rise until the armature is enough hotter than the air to give off all of this increased amount of heat.

It is evident, then, that when other conditions remain the same, the greater the load on a dynamo armature, that is, the more current it gives, the hotter it will get.

Now, at a certain temperature, the materials used in insulating the conductors of the armature, such as cotton, silk, shellac, paper, etc., will become *carbonized*, that is, charred, or otherwise rendered useless as insulating material. For a short time these materials will withstand a temperature considerably above the boiling-point of water (212° F.), but it has been found that if they are *continually* subjected to a temperature greater than about 180° F., they will gradually become carbonized; hence, as armatures

are expected to last several years, they should never be subjected to a continual temperature greater than about 170° F. Consequently, the amount of current which will cause a dynamo armature to heat to about 170° F. is the limiting amount which that armature can *safely* give.

75. As an armature must be a certain number of degrees hotter than the air in order to give off the heat generated, it is evident that if the air itself were originally of a high temperature, the armature would actually have a higher *temperature* when giving off a certain amount of heat than if the air were cooler; that is, for a certain amount of heat generated, the temperature of the armature will rise to a certain number of degrees *above the temperature of the air*. The average temperature of the air in places where dynamos are installed is often as high as 90° F., so the allowable rise in temperature of the armature above that of the air is about $170 - 90 = 80°$ F., and dynamos are usually rated according to this rise in temperature.

As *still* air is a very poor conductor of heat, most of the heat given off to it is carried away by the motion of the air; this motion is partly due to the air-currents set up by the rise of the heated air and the flowing in of the cooler air to take its place, but mainly to the air-currents set up by the motion of the armature itself. This latter effect is usually greater in ring than drum armatures, due to the more open construction of the former and to the *fan* action of the spider arms.

The heat generated in the field coils is disposed of in the same way as that of the armature; that is, it is given off to the surrounding air. The rise in temperature of the field coils is subject to the same limitations as the rise of the armature; i. e., it is usually limited to about 80° F above the temperature of the air.

76. By the *sparking* of a dynamo is meant the sparks which appear at the brushes, due to the *reversal of the current in the armature coils*. If the commutator is out of true, or has one segment higher or lower than the others,

or from other similar causes, there will be flashes or sparks at the brushes; but these are merely *mechanical* faults which can be easily remedied, and this is not what is meant by *sparking*. Referring to Fig. 28, it will be seen that in the armature coil $a' p p'$, when in the position shown, the general direction of the current is from right to left; but as soon as it moves into the position occupied by coil $b' a a'$, the general direction of the current is from left to right. Between these two positions the direction of the current must have been reversed, and this occurs during the time that the brush $+ B$ is resting on *both* the commutator segments which are connected to this coil ($a' p p'$).

Now, it has been shown (Art. **5**) that if the amount of current in a coil is suddenly increased or decreased, the *self-induction* of the coil tends to set up an E. M. F. in the coil which *opposes* the change in the strength of the current. Hence, when the current is reversed in the armature coil as it passes from one side of the brush to the other, the self-induction of the coil tends to prevent this reversal, so that when one of the commutator bars to which the coil is connected passes out from under the brush, the current flowing from the side of the armature into which the coil is entering (the left side in Fig. 28) in trying to pass through this coil is opposed by the E. M. F. of self-induction of the coil. Instead of passing through the coil, then, the current jumps from the commutator bar through the air to the end of the brush, making a spark. The same action takes place at each point of commutation.

In order to prevent this sparking, which burns the commutator bars and the brushes, the brushes are shifted forwards ahead of the actual neutral point, until at the same instant that the current in a coil is reversed the coil is moving in the edge of the magnetic field that spreads out from the pole-pieces, which generates in the coil an E. M. F. that is *opposite in direction to the E. M. F. of self-induction.* The consequence of this is that the E. M. F. of self-induction is diminished, which decreases the sparking. If the brushes are shifted to just the right position, the E. M. F. generated

in the coil by the magnetic field will just equal the E. M. F. of self-induction, and there will be no opposition to the reversal of the current; hence, no sparking. This is seldom actually done, as the E. M. F. of self-induction changes with every change in the strength of the current; but the effect of a certain amount of shifting of the brushes will usually so nearly counterbalance the E. M. F. of self-induction that the sparking will be slight at different loads.

77. It has been shown (Art. **29**) that the current in the armature winding reacts upon the magnetic field, forcing the actual neutral point ahead (in the direction of rotation). Now, if the brushes are moved ahead of this neutral point to avoid sparking, the effect is to move the consequent poles (due to the current circulating in the armature winding) also ahead, which shifts the neutral point still farther ahead, which requires a further slight shifting of the brushes. As long as the field due to the magnetizing coils is much stronger than the reactive effect of the armature, this action is slight, so that only a slight shifting of the brushes is necessary for practically sparkless operation. As the current in the armature increases, its reactive effect grows stronger, and a movement of the brushes is followed by a considerable movement of the neutral plane. Indeed, if the current in the armature is strong enough, the brushes may be shifted more than half way around the commutator without coming to the sparkless position. There is, therefore, a limit to the amount of current which can be taken from an armature (aside from its heating limit), which is reached when any amount of shifting of the brushes will not afford sparkless commutation.

This amount of shifting is generally confined to the space between the tips of the pole-pieces; that is, the brushes may be shifted until the coil short-circuited by a brush is at or just under the tip of a pole-piece.

In dynamos of good design the heating limit and sparking limit are reached with about the same current; that is, a current which will raise the temperature of the armature

above that of the air by the amount decided upon as a limit will also necessitate the brushes being shifted to the maximum allowable extent.

78. It is evident that while a brush is resting on two commutator bars at the same time, the coil connected between these two bars is *short-circuited*, the current from the two sides of the armature passing into the brush, one half through each of the two commutator bars, without passing through the short-circuited coil. The resistance which the current meets in passing from the bars into the brush is evidently the *contact resistance* of the surfaces which are in contact. When the brush rests equally on both commutator bars, the contact resistance opposed to each half of the current is the same; but as one of the bars moves out from under the brush and the other moves farther under it, the contact resistance is altered, and there is more opposition to the passage of one half the current into the brush than there is to the other. Now, with *metallic* brushes, which have a very low contact resistance if properly made, this difference is not enough to give any appreciable opposition to the current until the commutator bar is actually leaving the brush; hence, the current is *suddenly* forced to pass through the coil which has just been short-circuited. With *carbon* brushes the contact resistance is much greater than with metallic brushes; when the two bars are equally under the brush, this contact resistance is opposed equally to the current from each half of the armature, but as the one commutator bar begins to move from this position, the resistance opposing the current which is passing from that bar into the brush is great enough to force a part of the current around through the short-circuited coil and into the brush through the *other* commutator bar, in spite of the E. M. F. of self-induction of the coil.

From this it follows that with metallic brushes much more care must be taken to place the short-circuited coil in a field which will generate an E. M. F. equal to the E. M. F. of self-induction, since the absence of sparking depends

mainly on this point than with carbon brushes, since with these the absence of sparking depends both on generating an E. M. F. in the coil and on the contact resistance of the brush. On account of the increased resistance of contact, carbon brushes require less shifting for variations in load than do metallic brushes, and are generally used on machines where the variations in load are so frequent and extensive that a great deal of time would be spent in shifting the brushes, if this had to be done for every change in the load.

79. If the brushes are shifted so far forwards that the E. M. F. generated in the short-circuited coil is *greater* than the E. M. F. of self-induction, not only will the latter be neutralized, but a current will be sent around the coil through the commutator bars and the brush which short-circuits the coil. If this current is greater than the current which one half of the armature is supplying to the external circuit, it is evident that when the short-circuited coil moves over and becomes a part of that half of the armature, its current will be *reduced;* this reduction is opposed by the self-induction of the coil, as before, and sparking results. Since the circuit of the short-circuited coil is partly through the brush and its contact with the commutator bars, it is evident that with metallic brushes of low resistance the liability of the current in this coil becoming excessive is greater than with carbon brushes of (comparatively) high resistance. For the reason, therefore, that they are of higher resistance, carbon brushes will spark less than metallic brushes under the same conditions.

The cause and remedy for flashing and sparking at the brushes, due to mechanical imperfections or accident, will be taken up later.

DYNAMOS AND MOTORS.

(PART 3.)

CONSTANT-CURRENT DYNAMOS.

1. If an ordinary series-wound dynamo is connected to an external circuit whose resistance is variable, both the current and the E. M. F. will vary. For example, if the external resistance is increased, the current will be diminished; as the machine is series wound, this weakens the field, which lowers the E. M. F., and still further decreases the current. If the external resistance is decreased, the current and E. M. F. will each be increased.

In order to obtain a constant current in a circuit of variable resistance, it is necessary, then, to vary the E. M. F. of the machine as the resistance changes, and in the same proportion. There are many different devices for accomplishing this, as will be described.

In general, the field-magnets of constant-current dynamos may be bipolar or multipolar, with salient or consequent poles, according to the ideas of the designer. They are usually series wound. The armature windings, however, may be divided into two classes, **closed coil** and **open coil.**

CLOSED-COIL ARMATURES.

2. These have already been described in connection with constant-potential dynamos. Ring armatures are generally used in constant-current dynamos, on account of their good ventilation (see Art. **75,** Part 2), and from the ease with which any damaged coil may be repaired, since a

coil can be replaced without disturbing others, which is not the case in the usual form of drum windings, where the coils overlap.

3. The methods used to regulate the E. M. F. of closed-coil armatures are as follows: (1) Varying the speed; (2) varying the strength of the field; and (3) shifting the brushes.

The first method is seldom used, though in special cases it is very convenient. The principle of this method is that with a simple series-wound dynamo, if the external resistance is increased, decreasing the current and E. M. F. (Art. **1**), the speed may be increased until the E. M. F. rises to a point where it will force the normal current through the external circuit; if this adjustment of the speed is made as rapidly as the external resistance changes, the current will be maintained at a constant value.

4. The second method has been described in Arts. **40** and **41**, Part 2, in connection with series-wound dynamos. It is evident that this same principle may be applied to constant-current machines, so as to properly vary the E. M. F. The range of this method of regulation is quite limited, because the strength of the field can not be economically forced beyond the point where the iron begins to be saturated (Art. **35**, Part 2), and if it is much reduced, the armature reaction (which is constant, since the current is constant) will cause the neutral point to considerably alter its position.

5. The third method is almost universally used in this type of machines. It has been pointed out (Art. **19**, Part 2) that the greatest difference of potential in a (bipolar) closed-coil armature exists between the two opposite coils which are in the neutral spaces; so, to get this maximum difference of potential between the brushes, they are placed on the opposite commutator segments which are connected to these two coils. Now, if the brushes are shifted from this position, although the E. M. F. generated in the armature is not altered, the *difference of potential between the brushes*

is reduced; for, although the circuit through the armature winding is still divided into two parts connected in parallel between the brushes, the separate E. M. F.'s of all the coils in each of the two parts are not all in the same direction. This may be more plainly seen by examining Fig. 28, Part 2.

6. If there were no armature reaction, shifting the brushes to a point half way around the commutator from the neutral space would reduce the difference of potential between them to zero, and in positions between these two, the difference of potential would be proportional to the amount of shift. Since the coils short-circuited by the brushes would be moving in strong magnetic fields, there would also be violent sparking. (See Art. **79,** Part 2.)

There is, however, a very considerable armature reaction in dynamos of this type, which is so proportioned with respect to the strength of the field that it has two effects. One is to shift the neutral point so that the difference of potential between the brushes is not quite proportional to the amount of shift; but this is of little importance compared to the second effect, which is that the tendency of the current in the armature winding to form consequent poles at the points where the current enters or leaves the winding through the leads to the commutator (Fig. 34, Part 2) actually *forces the lines of force of the field away from the armature at these points*, leaving only a weak field to influence the short-circuited coil. By proper proportioning of the armature winding, this results in little or no sparking at the brushes, especially as the amount of current in a constant-current machine seldom exceeds 10 amperes, which allows of the use of such a narrow brush that the time during which a coil is short-circuited is so short that the current in the coil does not have time to become large enough to cause serious sparking.

The brushes may be shifted by hand to get the desired regulation, but as this would require constant attention, it is usual to shift the brushes automatically, by devices on or

near the dynamos. These devices are usually controlled about as follows: Electromagnets are connected in the main circuit, and are so adjusted that when any change in the external resistance causes the current to increase or decrease from normal, the corresponding movement of the magnet keeper mechanically connects the rocker-arm of the dynamo to some sort of driving mechanism, so that the brushes are properly shifted. When they reach such a point that the current is again at its normal value, the electromagnet (usually called the *controlling magnet*) disconnects the rocker-arm from the driving mechanism, and the motion of the brushes ceases until some change in the external circuit calls for a new adjustment.

The mechanical parts of the various brush-shifting devices are quite different in the different makes of constant-current machines. In the following description of the principal features of some of the best known types of closed-coil, constant-current machines, the types of regulating devices used will be taken up more in detail.

PRINCIPAL CLOSED-COIL CONSTANT-CURRENT DYNAMOS.

7. Wood Dynamos.—These machines have bipolar, consequent-pole, series-wound field-magnets of the type illustrated at *A*, Fig. 45, Part 2, and ring-wound armatures of quite large diameter.

The regulator on all except the largest size of this dynamo is such as is shown in Fig. 1 (*a*) and (*b*). To reduce the sparking to a minimum, it has been found desirable to use two positive brushes a, a_1, located a little distance apart on the commutator, and two negative brushes b, b_1, located opposite the positive brushes. The brushes are mounted on opposite ends of the rocker-arms r and r_1, so that simply shifting these two effects the shifting of the four brushes. The angle between the rocker-arms r and r_1 of each pair of brushes is variable, preserving a distance between the

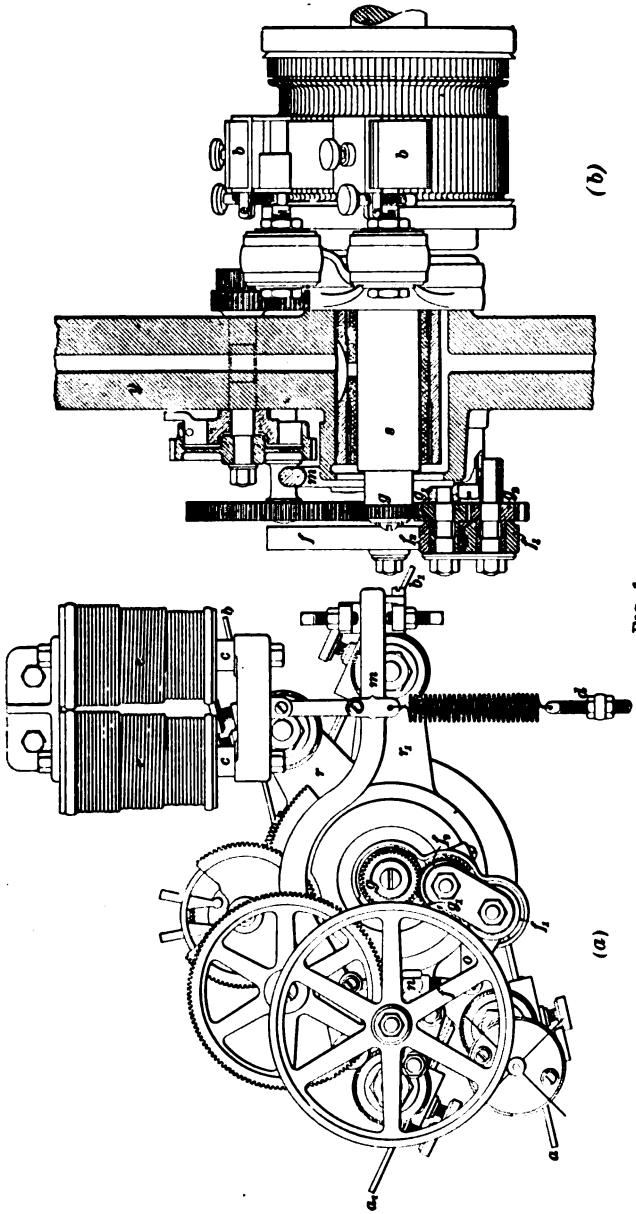

FIG. 1.

bearing ends of the brushes equal to about 3 commutator segments at light loads (low E. M. F.), and about double this at heavy loads (high E. M. F.). This variation in distance is accomplished by shifting the *back* brushes a_1 and b_1 of each pair a little faster than the front brushes a and b are shifted, so that the back brush gradually overtakes the front one, lessening the distance between them, in shifting from the heavy-load to the light-load position.

The electromagnet e is connected in series with the armature, field, and external circuit, and furnishes the power for regulating the current. The cores c, c of this electromagnet are free to move into or out of the coils, the attraction of the magnet being balanced by a tension spring provided with an adjustment at d. The lever arm m is raised by the electromagnet when the current increases, and is lowered when the current weakens. A small gear g on the end of the shaft continuously drives two friction-rollers f_1, f_2 in opposite directions by means of the gears g_1, g_2. The movement of the lever arm m presses the friction-wheel f, by means of the intermediate links n, o, against one or other of the friction-rollers, thereby turning the friction-wheel in a forward or backward direction. This motion is then communicated by means of gearing to the rocker-arms, producing the relative movement already referred to. The two positive and the two negative brushes are connected by short, flexible cables, so that the intervening coils on the armature are short-circuited. As the distance between the brushes increases, a further number of coils will be short-circuited; as these coils lie, however, in the neutral space, the effect of cutting them out is to neutralize their demagnetizing action, thereby increasing the E. M. F. of the dynamo. In order to facilitate adjustment, the brushes are set to a certain length, the amount of their projection from the holders being determined by means of a gauge. The regulator is fastened to one of the yokes y of the field. In the larger sizes of these machines, the friction-rollers are driven by a light belt from a small pulley on the end of the armature shaft, but otherwise operate in the same manner as

that described. These regulators are simple and reliable in action.

8. Standard Dynamos.—These machines have bipolar, consequent-pole, series-wound field-magnets of the type illustrated at *H*, Fig. 45, Part 2. The armature is of the ring type, and differs from that of the Wood machine only in the details of its construction. A single pair of brushes is used, which is shifted to vary the E. M. F. and to keep the current constant by a mechanism situated on the base of the machine. This mechanism is driven by a light belt from a small pulley fastened to the end of the armature shaft.

In these machines, the field-magnets themselves act as a controlling magnet, a short bar of soft iron pivoted in the center being placed between the tips of the pole-pieces on one side to act as a keeper. The tendency of this keeper is to move around until it is in a straight line between the two pole tips, but it is held at an angle to this position by the pull of a spring. Attached to this keeper is a lever, which is also attached to two *pawls*, or pointed strips of iron, hinged at one end and pointing in opposite directions. These two pawls are kept at a certain distance apart, but the attachment to the keeper is so arranged that when the keeper moves away from its normal position against the pull of its spring, the pawls move so that the points of both are lowered, and when the spring pulls the keeper away from its normal position, the points of both the pawls are raised.

These pawls are given a continuous back-and-forth movement by an eccentric driven by the belt from the pulley on the armature shaft, and between them there is a flat bar, notched or toothed on the edges, which is attached to the rocker-arm of the machine.

The method of regulation is, then, as follows: If the resistance of the external circuit decreases, the corresponding increase in the current strengthens the field-magnets, which causes the keeper to move away from its normal position against the pull of the spring. This lowers both the pawls, and the top pawl, which points *towards* the commutator,

catches in the teeth on the top edge of the flat bar which is attached to the rocker-arm, and as the pawl moves back and forth, the rod is pushed ahead (towards the commutator), thus shifting the brushes away from the neutral point. When the reduction in the difference of potential is sufficient to reduce the current to its normal value, the keeper returns to its normal position, lifting both pawls, so that neither catches on the teeth of the flat bar, which therefore becomes stationary. If the current is reduced below its normal value by an increase in the external resistance, the keeper is pulled away from its normal position by the spring, and the pawls are lifted still farther, until the lower pawl catches on the teeth on the under side of the flat bar. As this pawl points away from the commutator, its motion causes it to push the rod in the same direction, rocking the brushes *towards* the neutral point and increasing the difference of potential between them until the current is again at its normal strength.

9. Western Electric Dynamos. — In the smaller sizes these machines have bipolar, consequent-pole, series-wound field-magnets of the type illustrated at *I*, Fig. 45, Part 2, with drum-wound armatures; in the larger sizes the field-magnets are multipolar, with salient poles, and ring-wound armatures are used.

The machines are regulated to give a constant current by shifting the brushes, as in those previously described; the mechanism for shifting the brushes is driven by a belt from the end of the armature shaft, and controlled by a separate controlling magnet, as in the Wood dynamo. The controlling magnet throws into or out of gear or reverses a friction-clutch arrangement, which shifts the brushes forwards or backwards as the load is increased or diminished.

10. Excelsior Dynamos. — These machines have bipolar, salient-pole, series-wound field-magnets, and use ring armatures. The type of field-magnet used is similar to what the type illustrated at *D*, Fig. 45, Part 2, would become if the field cores, yoke, and spools on one side of the magnet were removed, leaving the pole-pieces covering

three faces of the armature. An iron arm projects from each pole-piece, forming the pole-pieces for a small armature, which is operated as a motor to shift the brushes of the machine. This small armature is geared to the rocker-arm, and the controlling magnet is so arranged that if the current in the machine rises above the normal, a portion of the current is shunted through the armature of this small motor, which causes it to turn in such a direction that the brushes are moved away from the neutral point, thus reducing the current.

At the same time, the motion of the rocker-arm operates a switch which cuts out some of the turns of the magnetizing coils, thus reducing the E. M. F. of the armature. It will be seen that this method of regulating the difference of potential between the brushes is a combination of the methods described in Arts. **4** and **5.**

If the current is decreased below the normal strength, the controlling magnet reverses the current in the armature of the small motor, so that it runs in the opposite direction and shifts the brushes towards the neutral point, at the same time cutting *in* some of the turns of the magnetizing coils, all of which brings the current back to its normal strength.

11. Ball Dynamos.—These machines are of a very peculiar construction. The magnetic circuit is represented in Fig. 2, from which it will be seen that two armatures are employed, each with an independent commutator. The field-magnet is arranged with only one pole-piece for each armature, as represented; but as the lines of force must complete their circuit, they form irregular poles on the opposite side of the armature, the paths of the lines of force being represented by the dotted lines in the figure. The armatures are ring wound, and may each be used separately or connected in series.

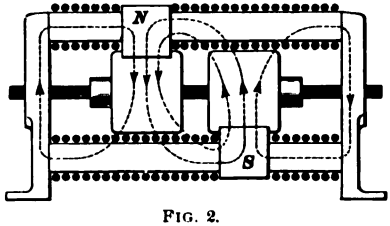

FIG. 2.

In the larger machines of this type, the regulation is obtained by automatically shifting the brushes, the field-magnets of the machine itself acting as the controlling magnet, and also furnishing the necessary power. A circular opening is made in the magnetic yoke (on each end of the machine) of such size that the area of the magnetic circuit at that point is much reduced, which causes a leakage of the lines of force across the opening. Two iron segments are supported on a non-magnetic hub in this opening. Now, if these iron pieces were free to move, they would take up such a position in the opening as to make up as much as possible for the reduction in the area of the magnetic circuit, and allow the lines of force to pass directly through them. They are free to rotate about the hub to which they are attached, which revolves on ball bearings, but are prevented from taking up their natural position by a counterweight, which deflects them more or less, according to the strength of the field of the machine.

The brush-holder studs are connected directly to this movable part of the magnetic yoke, so that when the strength of the field increases, due to an increase in the current above the normal strength, this movable part is pulled around against the opposition of its counterweight until the brushes are shifted to the point where the current again becomes of normal strength.

OPEN-COIL ARMATURES.

12. Open-coil windings consist of a comparatively small number of coils, which are connected directly to the external circuit (through the commutator) when in the position where the E. M. F. generated in them is a maximum. (See Art. **20**, Part 2.)

As the coils move away from this position, they are connected in parallel with other coils, and are finally, when near the position where their E. M. F. is zero, disconnected entirely from the external circuit. These various connections

are made by the brushes and the commutator, by means which will be explained in speaking of the principal makes of machines of this type. The changes in the connections of the coils and the small number of coils used make the difference of potential between the brushes fluctuate, so that the current in the external circuit is *pulsating* in character. In speaking of it as a *constant* current, it is meant that the *average* current strength is constant.

PRINCIPAL OPEN-COIL CONSTANT-CURRENT DYNAMOS.

13. Brush Dynamos.—These machines use a disk-shaped ring-wound armature with projections on both sides of the ring, between which the coils are wound.

The magnetic circuit has four poles, but is really a consequent-pole, bipolar field-magnet, as will be seen from Fig. 3, which represents the field-magnet as seen from the top. This type of field-magnet is what that shown at *D*, Fig. 45, Part 2, would become if that part of each pole-piece which covers the cylindrical face of the ring were removed.

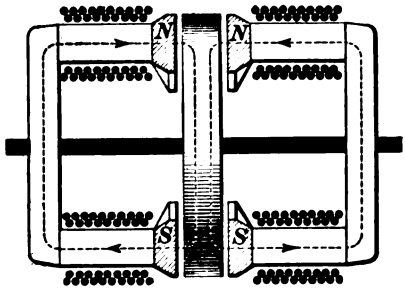

FIG. 3.

The armature winding of these machines consists really of a number of windings, each with a separate commutator. Each winding consists of four coils, arranged in two sets of two coils each. The two coils of each set are placed on opposite sides of the armature core, so that one coil is always in the same position relative to one pole-piece that the other coil is to the other pole-piece; this being the case, the E. M. F.'s generated in the coils are equal at all parts of their revolution, and they are permanently connected in series, so that they really act as one coil. The other set of coils belonging to the winding is placed on the core in the

same manner, but at right angles to the first set, so that when the coils of one set are under the center of the pole-pieces, that is, are in their most active position, the coils of the other set are in the neutral spaces, that is, in their least active position.

14. It will be seen that this arrangement of the two sets of coils corresponds to the arrangement of the two loops of wire described in Art. **15**, Part 2, and illustrated in Fig. 19, Part 2; the ends of each of the two sets of coils are connected to two opposite segments of a commutator just as there described, except that instead of each segment being a little less than $\frac{1}{4}$ of the circumference, so that the brushes leave one pair of segments at the same time that they begin to bear on the other pair, in the Brush commutator each segment covers a little more than $\frac{1}{4}$ the circumference, the segments of one pair being placed alongside the segments of the other pair, to allow for this extra length.

This is represented in Fig. 4, a and a' being the two segments connected to one set of coils, and b and b' being the two that are connected to the other set. It will be seen from this figure that each of the brushes (*1* and *2*) rests on one of the two opposite segments b and b'; but as the commutator revolves, each brush rests on one segment of *each* pair, a' and b' and a and b, where they overlap. Consequently, the coils connected to each pair of segments are connected in parallel with each other during a part of each half revolution.

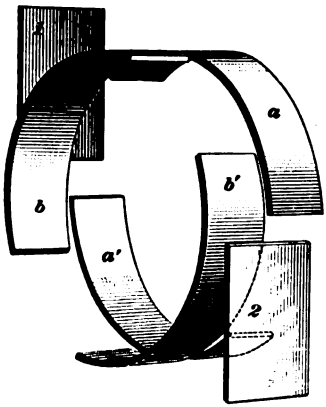

FIG. 4.

If this form of commutator with overlapping segments be applied to Fig. 19, Part 2, it will be seen that at the moment when the two loops of wire are thrown in parallel by each brush resting on two segments, the E. M. F. in the two

loops is not the same, that of the loop which had just before alone been connected to the brushes being higher than that of the other. A little later, at the moment when one of the loops is disconnected from the circuit by each brush passing from two segments to a single segment, the coil which is disconnected has a less E. M. F. than the other.

If the loops had little self-induction, this would result in the greater E. M. F. of the one loop sending a current around through the other loop against the E. M. F. generated in it, which current would not appear in the external circuit, and would therefore represent so much wasted energy.

This *local current* would evidently be greatest when the difference between the E. M. F.'s of the two coils is greatest, that is, at the moment when the two loops are connected in parallel, and at the moment one of the loops is disconnected from the brushes. Then, when the one loop is disconnected from the other, this local current would be suddenly broken, and this would result in sparking.

In the Brush machines, the self-induction of the coils is considerable, so that when two sets of coils are connected in parallel, the self-induction of the coil having the lower E. M. F. prevents this sudden rush of local current, and takes up its share of the output of the machine gradually.

At the same time, the parallel connection of the sets of coils is not broken until the E. M. F. of the set which is disconnected is enough lower than that of the other set so that it is furnishing practically none of the current output; hence, there is little sparking when it is disconnected.

15. As stated, the Brush armature winding is made up of two or more separate windings, the action of each being as already described.

Fig. 5 represents a Brush armature with two separate windings. In this figure, the pole-pieces are represented by the heavy dotted lines as they face the sides of the armature, as shown in Fig. 3. The segments of the two separate commutators are, for convenience, represented as concentric,

with the brushes resting on their edges; whereas, actually, they lie side by side, forming two separate commutators of the same diameter, each having four segments, and the brushes rest on their circumferences.

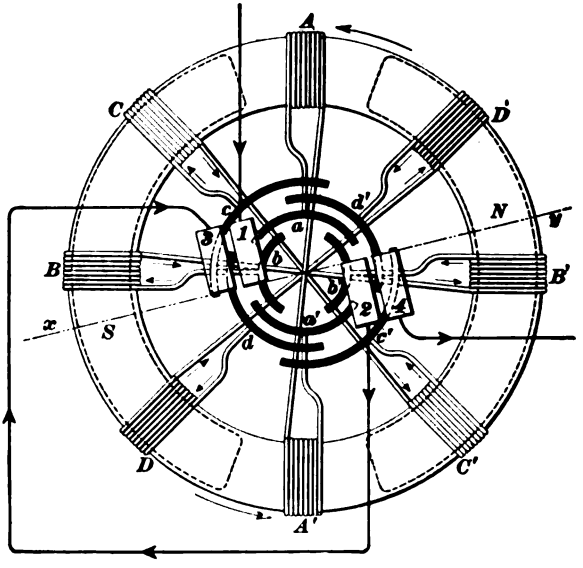

FIG. 5.

One winding consists of two pairs of coils A A' and B B', located at right angles to each other, the coils of each pair being connected in series, as represented.

This winding is connected to its commutator, coil A to segment a, coil A' to segment a', coil B to segment b, and coil B' to segment b', as represented. Brushes *1* and *2* rest on this commutator, making contact on the line of maximum action x y of the coils. It will be seen that this line is not from center to center of the pole-pieces, but is moved ahead (in the direction of rotation, as indicated by the arrows) from this position by the armature reaction.

The second winding consists of two pairs of coils C C' and D D', located at right angles to each other and half way between the coils of the first winding. These coils are

connected in series and to the segments of the second commutator, coil C to segment c, coil C' to segment c', coil D to segment d, and coil D' to segment d', as represented. Brushes *3* and *4* rest upon the segments of this commutator on the same line of maximum action of the coils.

Taking each winding separately, it will be seen that its two sets of coils pass through the following combinations: One set of coils only connected to the brushes; then the two sets, connected in parallel, both connected to the brushes; then one set only; then both sets in parallel; and so on.

The maximum E. M. F. occurs when the single set of coils is connected and is directly in the line of maximum action; the minimum occurs $\frac{1}{8}$ of a revolution ahead of this point, when both sets of coils are in parallel and are equally distant from the line of maximum action. (See Fig. 20, Part 2, and compare the accompanying text with the above.)

This being the case, it is evident that as the coils of one winding are half way between the coils of the other, *the maximum E. M. F. of one winding occurs at the same instant as does the minimum E. M. F. of the other.* On account of this, when the two windings are connected in series, the fluctuations of the current are much reduced.

This connection of the two windings is obtained by connecting the positive brush (*2*, Fig. 5) of one winding with the negative (*3*, Fig. 5) of the other, the external circuit being connected between the two remaining brushes (*1* and *4*, Fig. 5).

In the large sizes of these machines, three and even four separate windings are used, each with its commutator, and all connected in series. In the larger multipolar machines, each winding consists of two sets of coils, each set containing four coils, one for each pole-piece. The action is precisely the same as in the bipolar machine.

16. The regulation of the Brush machines is nearly automatic; that is, a machine will give *nearly* a constant current without any regulation whatever. This is due to the fact that the armature reaction increases so much with

any increase in the current that the line of maximum action is shifted farther ahead, which changes the relations of the various coils at the time when they are connected with, or disconnected from, each other or the external circuit.

This regulation is, however, not close enough for commercial working; so in addition, a resistance is placed in shunt to the magnetizing coils, which is varied by a controlling magnet in the main circuit, thus making the regulation very exact. (See Art. **41**, Part 2, and Fig. 43, Part 2.)

This resistance consists of a series of blocks of carbon—a material which has the property of lessening its resistance if subjected to pressure. In this case the pressure is obtained by the pull of the controlling magnet on its keeper, which forms the end of a lever that presses upon the carbon blocks. If the current in the external circuit increases, due to a lessening of the external resistance, the controlling magnet pulls on its keeper with greater force, thus increasing the pressure on the carbons, decreasing their resistance, and weakening the strength of the field-magnets, which reduces the E. M. F. of the armature coils until the current is again at its normal strength.

The shifting of the point of maximum action, due to the weakening of the field at light loads, causes a certain amount of sparking, which is remedied by slightly shifting the brushes. In the multipolar machines, this shifting is performed automatically by mechanism driven by a belt from a small pulley on the end of the armature shaft, and controlled by the controlling magnet, as in the closed-coil dynamos described.

17. Westinghouse Dynamos. — These machines, which are comparatively new, use a multipolar field-magnet with six salient poles, of the type illustrated at *C*, Fig. 49, Part 2. The armature coils are wound around eight projecting teeth on the armature core, there being, therefore, eight armature coils. With eight coils and six poles, it is evident that only two coils can be directly under any two pole-pieces at the same instant. This armature winding, as in the Brush

machine, is divided into two separate windings, each consisting of two pairs of opposite coils, and each connected to a separate commutator. The combination of connections of the various sets of coils is similar to that of the Brush machine; that is, the set of coils in the position of least action is disconnected entirely from the circuit, those near the position of maximum action are connected in parallel, and in series (by external connection of the brushes) with that set which is actually in the position of maximum action.

In this machine, a coil is in the position of least action when the projection on which it is wound is directly under a pole-piece, for when in this position all the lines of force from the pole-piece pass directly through the center of the coil, which therefore cuts none of the lines of force. As soon as the coil moves from this position, one side begins to cut the lines of force of the pole-piece it is moving away from; as it moves still farther, the *other* side of the coil begins to cut the lines of force of the pole-piece *towards* which it is moving, so that when half way between the two, both sides of the coil are cutting lines of force equally and at the maximum rate, and this is, therefore, the position of *maximum* action.

18. A diagram showing the connections of the armature winding to the commutator of the Westinghouse machine is given in Fig. 6. As in Fig. 5, the two commutators are represented as concentric, though they are actually side by side on the shaft, and, as in the Brush machine, are situated on the end of the shaft outside one of the bearings, the leads to the commutator being brought out through a hole in the shaft, instead of being connected directly, as represented in the diagram.

The two pairs of coils A and A' and B and B' make up one winding, and are connected to one commutator, as represented. The two opposite coils A and A' and B and B' are connected in series by connections across the back of the armature core (not shown in the diagram).

The other winding is made up of the two pairs of coils

C and *C'* and *D* and *D'*, the coils of each pair being connected in series, as before.

It will be seen that each commutator is made up of twelve segments separated by a considerable width of insulating material (indicated by the solid-black parts). These twelve segments are connected together by cross-connecting wires in three sets (one for each pair of poles), of four segments each (one for each coil of the windings).

Instead of the segments overlapping as they do in the Brush machine, each brush is divided into two parts, which rest on the commutator at a distance apart equal to the length of one segment, as represented at *1 1'* or *2 2'*

Applying the statement made in Art. **17** to Fig. 6, it will be seen that coils *A* and *A'* are in the position of least

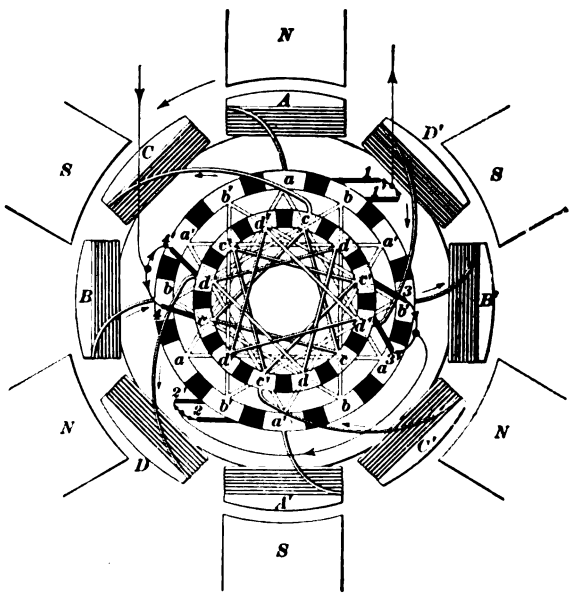

FIG. 6.

action, and are disconnected from the external circuit. The other set of coils of this winding, *B* and *B'*, is, however, in the position of maximum action, and is connected to the circuit through brushes *1* and *1'* and *2* and *2'*, which rest on

segments *b* and *b'*, respectively. Of the second winding, each set of coils *C* and *C'* and *D* and *D'* is equally distant from the position of maximum action, and these two sets are therefore connected in parallel with each other through brushes *4* and *4'*, which rest on segments *c* and *d*, and brushes *3* and *3'*, which rest on segments *c'* and *d'*, and are connected in series with the set of coils *B* and *B'* by the external connection between the two sets of brushes *2* and *2'* and *3* and *3'*.

To follow out the changes in the connections of the coils, consider that the armature is moving in the direction indicated by the arrow.

As coils *B* and *B'* move away from their position of maximum action, brushes *1'* and *2'* are disconnected from segments *b* and *b'*, and as the armature moves, finally come into contact with segments *a* and *a'*, thus throwing the two sets of coils *A* and *A'* and *B* and *B'* in parallel. At the same time, brushes *4* and *3* being disconnected by the insulating segment from segments *c* and *c'*, coils *D* and *D'* only of the second winding are connected to the circuit through brush *4'* and in series with the coils of the other winding (now connected in parallel) through brush *3'* and its connection with brushes *2* and *2'*, coils *C* and *C'* being entirely disconnected.

It will be seen that these successive combinations of coils are precisely the same as take place in the Brush machine, except that each combination takes place six times in each revolution, instead of twice, which is due to the multipolar field. The regulation of this machine is entirely automatic. The field-magnets are separately excited, the current being furnished by a separate constant-potential dynamo, which gives a constant magnetizing force; but the strength and distribution of the resulting field are dependent on the armature reaction, which is so proportioned that any excess of current over the normal so reduces and distorts the field that the E. M. F. generated in a winding during the time that it is connected to the brushes is reduced until the current is again at its normal strength.

19. Thomson-Houston Dynamos.—These machines have bipolar, series-wound, salient-pole field-magnets, of the type illustrated at *K*, Fig. 45, Part 2. The completed armature is very nearly spherical in shape, and the pole-pieces are bored out accordingly, so that they almost entirely enclose the armature.

In the older machines, the armature is drum-wound, although the core is a ring, but in the newer machines, a ring winding is used; in either case, three separate coils, or sets of coils, make up the winding. One end of each of these coils (or sets of coils) is connected to a commutator segment, all the other ends being joined together.

The commutator has three segments, each covering nearly $\frac{1}{3}$ of the circumference, the balance being made up by the air-spaces which separate the segments.

Two positive and two negative brushes are used, those of each pair resting on the commutator at two points at a distance apart equal to one-half a commutator segment, that is, nearly $\frac{1}{6}$ the circumference, when the machine is giving its greatest E. M. F.

20. A diagram of the connections, etc., of the drum-wound armature is shown in Fig. 7. *A A'*, *B B'*, and *C C'*

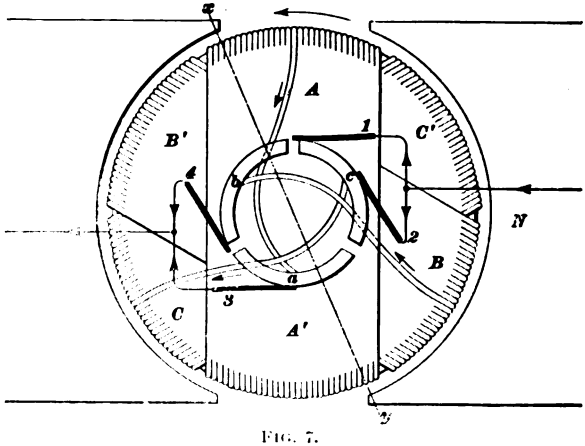

FIG. 7.

are the three coils, wound on the core $\frac{1}{3}$ of the circumference

apart. One end of each of the coils is joined to a metal ring (not represented in the figure) on the back of the armature, which forms a common connection for the three. The other ends are joined to the commutator segments, that of *A A'* to segment *a*, that of *B B'* to segment *b*, and that of *C C'* to segment *c*, as represented; *1* and *2* are the negative, and *3* and *4* the positive, brushes. Brushes *2* and *4* are usually called the *primary* brushes and *1* and *3* the *secondary* brushes, to distinguish them.

From the diagram (Fig. 7) it will be seen that coil *A A'*, though half way between the pole-pieces, is partly active, since the neutral line is shifted forwards by armature reaction, as indicated by the line *x y*. This coil *A A'* is connected in parallel with coil *B B'* by the two positive brushes, and the two are in series with coil *C C'*. If the armature be considered as moving in the direction indicated by the arrow, it will be seen that as coil *A A'* gets to the position of least action, it is disconnected from the circuit by segment *a* passing out from under brush *3*, leaving coil *B B'* and coil *C C'* in series. However, as the distance between brush *3* and brush *2* is only slightly greater than the span of one segment, coil *A A'* is almost immediately connected in parallel with coil *C C'*, as segment *a* passes under brush *2*, making the following combination: Coil *B B'* in series with coils *A A'* and *C C'* in parallel.

As the rotation of the armature continues, coil *C C'* is disconnected from the negative brush *1* and connected to the positive brush *4*, being thus thrown in parallel with coil *B B'*, the two being then in series with coil *A A'*.

Completing the half revolution, coil *B B'* is disconnected from the positive brush *3*, and is joined in parallel with coil *A A'* by the two negative brushes *1* and *2*, leaving coil *C C'* connected to the positive brushes.

Further rotation of the armature repeats this series of connections; that is, during every half revolution, one of the coils (*A A'* in the preceding paragraphs) is first in parallel with the coil *behind* it, then momentarily disconnected from the circuit, then connected in parallel with the coil

ahead of it, then connected in series with the other two, which are then in parallel.

From the diagram (Fig. 7) it will be seen that when a coil is disconnected from one set of brushes, it is very nearly in the position of least action, and the coil with which it was just before connected in parallel has the higher E. M. F. of the two. As explained in Art. **14**, the self-induction of the coil prevents the higher E. M. F. of the other sending a current through it in opposition to its own E. M. F. at the time when they are connected in parallel; in fact, when the coil is disconnected from its mate, it is still supplying some of the current, so that there is a spark at the brushes.

21. The regulation of this machine is effected by varying the distance between the two brushes of each set, the primary brush being moved back and the secondary ahead. This movement of the brushes decreases the distance between the primary brush of one set and the secondary of the other. Now, as when in the position shown in the figure (Fig. 7), this distance is only slightly greater than the span of one commutator segment, it is evident that lessening this distance will allow of one segment being under *both* one of the positive and one of the negative brushes during a part of a revolution, which *short-circuits* the armature, reducing the difference of potential between the brushes (momentarily) to zero.

As the field-magnets are in series with the armature, their great self-induction prevents the strength of the current from falling to zero, its fluctuations being comparatively small. At the same time, the self-induction of the armature coils prevents any excessive flow of current from one to the other through this short circuit; for, there being two places where the short circuit occurs, i. e., between brushes *1* and *4* and *2* and *3*, and there being three commutator segments, it is evident that six short circuits occur during every revolution, and if the armature is revolving at 850 revolutions per minute, there are $6 \times 850 = 5{,}100$ short circuits every minute, so that each lasts only an extremely short time.

As the distance between the brushes of a set is increased, each short circuit is kept up for a slightly longer time. It will be seen that this momentary reduction of the difference of potential between the brushes to zero reduces its effect in sending a current through the circuit, although its maximum value is not much reduced; so that by shifting the brushes at the proper time, the current in the external circuit can be kept at a constant strength, in spite of variations in the external resistance.

This shifting of the brushes is done automatically by the following apparatus: The primary and secondary brushes are mounted on separate rocker-arms, which are connected together by a system of levers, so that when the primary brushes are shifted back, the secondary are moved ahead. The amount of movement of the secondary brushes is very little, being for the purpose of following the line of maximum action, which moves ahead slightly at light loads (low E. M. F.). A large magnet attached to the frame of the machine has attached to its keeper a lever, which is connected to the rocker-arm that carries the primary brushes, so that when the keeper of the magnet is pulled up, the primary brushes are shifted back and the secondary ahead, thus reducing the effective difference of potential between the brushes, as explained. The current for operating this regulating magnet is supplied by the main current, but it is not continually in circuit, being cut in or out, as occasion requires, by a controlling magnet, which is placed on the wall of the room at some convenient place.

22. Fig. 8 is a diagram of the connections used in this apparatus. *R* represents the regulating magnet and *K* its keeper, which is connected to the rocker-arms by a lever (not shown), as described. *C*, *C* represent the coils of the controlling magnet, which are stationary, and *D*, *D* represent the cores of this magnet, which are movable. Their weight is partly counterbalanced by the spring *s*, the tension of which is adjusted by means of the nuts at *N*. Attached to these cores is a contact point, which touches a

stationary contact piece at B. The connections being as represented, + being the positive terminal of the dynamo, it is evident that when the two contact points at B are touching, the regulating magnet R is short-circuited, the current flowing from + to p^2, thence to P^2, thence through the contact points at B to P, thence through coils C, C to P^1, and out to the line. Now, if this current exceeds a certain strength, the pull of the coils C, C on the cores D, D becomes sufficient to raise them, breaking the contact at B. This forces the current around from P^2 through the regulating magnet R to P, thence to P^1, where it passes out to the line as before. The regulating magnet then attracts and pulls up its keeper K, which in moving shifts the brushes and reduces the current as described.

When the current is reduced to its normal value, the cores of the controlling magnet descend, and contact is made at B, which short-circuits the regulating magnet, and allows its keeper to drop. This shifts the brushes again so as to increase the current. This action is kept up, so that the cores of the controlling magnet and the brushes of the machine are continually in slight motion. In order to prevent the self-induction of the regulating magnet causing a serious spark at B when the contact is broken, a shunt of high resistance is permanently connected around the break at B, as represented at r. This self-induction is produced in the regulating magnet R whenever the circuit is opened at B, for this suddenly diverts the main current through the regulating magnet, whose momentary self-induction opposes the current, forcing it along by way of p^2, P^2, and the resistance r to the line. If the resistance were not there, the

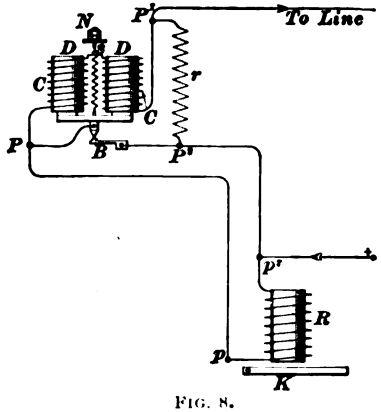

FIG. 8.

current would cross the air-gap at B, making a destructive spark.

The space between the ends of the commutator segments being small, some device is necessary to prevent the spark which occurs when a segment passes from under one of the secondary brushes from continuing to pass from segment to segment, for that would permanently short-circuit the machine. This device consists of a small rotary blower, which is situated between the commutator and the bearing. This blower is so arranged as to deliver a puff of air right at the end of the secondary brushes at the moment that the spark occurs, so that it is immediately broken and does no damage.

The adjustment of the commutator, brushes, air-blast, etc., of this machine requires considerable attention in order that the machine should run well. The manufacturers supply printed matter with each machine, giving full particulars of these operations, hence they need not be taken up here.

THE OUTPUT OF CONSTANT-CURRENT DYNAMOS.

23. From the nature of the output, the heat losses in constant-current dynamos are practically constant at all loads. In some of the open-coil machines, the local currents which circulate in the coils may be of greater strength than the current in the external circuit, at light loads, so that the heating of the armature may be even greater at light loads than at full load. It is evident, however, that the heating is not the factor which limits the load, nor is the sparking, since the machine must be so designed that the sparking is the same at all loads. The factor of the load which varies is the E. M. F., so that when this has reached its highest value, any further increase in the external resistance can only reduce the current, since the E. M. F. can not increase farther. The maximum E. M. F. which the machine can give is then the limit of its output.

Constant-current machines may be rated according to their output, expressed in kilowatts (1 kilowatt being one thousand watts), as are constant-potential machines; but as they are almost invariably used for operating *arc lamps*, they are usually rated according to the maximum number of lamps for which they can supply current. The strength of the current most used is from 9.5 to 10 amperes, 9.6 being the standard adopted by many manufacturers. With this current, each arc lamp requires from 45 to 50 volts. All lamps being connected in series, this makes the maximum E. M. F. of, for example, an 80-light dynamo $80 \times 50 = 4{,}000$ volts. Machines are built of 150 lights capacity, but the sizes most generally used have a capacity of from 50 to 80 lights.

Almost all the regulating devices used are practically independent of the speed, so that they will maintain the current constant when the speed varies somewhat, if the variations are not too sudden. Any reduction in the speed, however, reduces the maximum E. M. F. and output which can be obtained, and, conversely, an increase in the speed will increase the possible output.

ALTERNATING-CURRENT DYNAMOS.

DEFINITIONS.

24. The definition of an alternating current is given in Art. **13,** Part 2. In speaking of alternating currents, each reversal of the current, that is, each increase of the current from zero to its maximum, and the decrease to zero again, is called an **alternation.** In the case of a simple loop of wire rotating in a magnetic field, the current in the loop goes through one *alternation* in each half revolution; in a complete revolution, it passes through two alternations—one in one direction and one in the contrary.

If the rotation is continued, this process is repeated for every revolution, so that an alternating current is made up of a number of repetitions of a pair of opposite alternations.

This pair of alternations is called a **cycle.** The number of cycles which occurs in a given time (usually one second) is called the **frequency,** so that if the simple loop referred to above is rotated at the rate of 60 revolutions per second, the frequency of the alternating current generated would be said to be 60, that is, 60 cycles per second.

In treating of alternating currents, the graphical method of representing the value of the E. M. F., or current, explained in Arts. **12** and **13,** Part 2, is much used. It is only necessary to represent one cycle, since under similar conditions they are all alike, and for convenience, the length of one cycle is taken to represent 360°, whatever may be the length of time required to complete it. Different parts of the curve may then be said to be so many degrees apart; for example, if the base line *A E* in Fig. 14, Part 2, is taken as 360°, each division will then represent 30°, since there are twelve divisions, and any two succeeding zero-points, as *A* and *C* or *C* and *E*, will be 180° apart, or a zero-point and a maximum point, as *A* and *B*, are 90° apart.

Further, any point on the curve may be said to be so many degrees ahead or behind some other point. For example, in this same figure, point *C* is 180° *behind* point *A*, because point *C* represents a later period of time than does point *A*, and is 180° *ahead* of point *E*, because it represents an earlier period of time.

ALTERNATORS.

25. The current in the separate conductors of a direct-current armature is naturally alternating; for when the conductors pass over from one pole-piece to another, the direction of the current in them is reversed. It is often necessary to use alternating currents in the external circuit, and when this is the case, there is substituted for the commutator which is used for the purpose of changing the alternating current of the armature conductors to a direct current for the external circuit, a pair of collector rings, which make continuous contact between the ends of the

armature winding and the brushes connected to the external circuit. (See Fig. 38, Part 2.)

The principle of the winding of alternating-current dynamos (commonly called **alternators**) is the same as that of direct-current machines, and either a ring or a drum winding may be used; but in order to get the best results, it is necessary to use a different method of connecting and locating the coils of the winding.

If a single coil of wire is wound on a ring core, and the core is rotated in a magnetic field, it is evident that if the coil occupies a space on the core greater than the width of the neutral space (see Art. **21,** Part 2), there will be two points in each revolution where a part of the coil is under *each* pole-piece, as represented in Fig. 9. Under these circumstances, the E. M. F. generated in that part of the coil under one pole-piece is opposite in direction to that generated in the part under the other pole, as represented by the arrow-heads, so that they neutralize, or partly neutralize, each other, until the coil has moved entirely out from under one pole-piece.

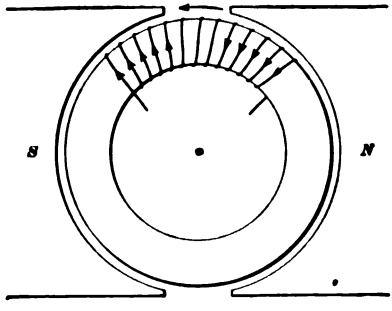

FIG. 9.

In order to prevent this opposition of the E. M. F.'s generated, it is necessary to make the coil no wider than the neutral space. Now, if the pole-pieces cover a large part of the surface of the armature, as is the case in the direct-current machines described, the coil must be very narrow, so that only a small part of the surface of the core is utilized. To remedy this, the pole-pieces of alternators are made narrow, usually so that the width of the neutral spaces is equal to the width of the fields. A coil may then be wound on the core equal in width to the width of the neutral space (or of the field, since these are equal), and there will be no opposition of the E. M. F.'s when the armature is rotated.

As the armature is rotated, the coil enters and leaves the field gradually; that is, first one conductor moves into the field and becomes active, then the next, then the next, and so on until the entire coil is in the field, when it moves out in the same manner. On this account, although the field is practically of uniform strength, the *total* E. M. F. of the coil rises gradually from zero, when it is wholly in a neutral space, to a maximum when it is wholly in one field, then falls gradually to zero again when in the other neutral space. Thus, the graphical representation of the values of the E. M. F. of such a coil at any instant would correspond with those given for the single loop in Art. **12**, Part 2.

26. If only a single coil is wound on the core, and its width is confined to that of the neutral space, only a small part of the surface of the core will be covered; but it is evident that another coil of equal width may also be wound on the core, directly opposite to the first.

This second coil will then enter or leave one field at the same time that the first is entering or leaving the other field, and with the same velocity, so that if the number of turns in the two coils is the same, they will have equal E. M. F.'s generated in them at any instant.

This being the case, the two coils can be connected in series, so that their E. M. F.'s will add together. Fig. 10 represents a ring-wound armature rotating in a bipolar field, with two opposite coils, each equal in width to the width of the neutral space, which is equal in width to the field. These two coils are connected in series, and to the two rings of a collector (shown for convenience as being concentric) on which bear two brushes B and B_1, between which an external circuit may be connected.

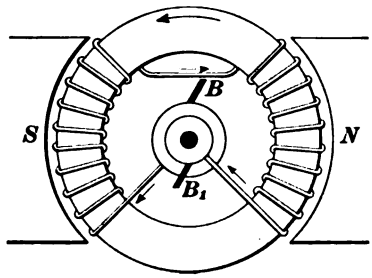

FIG. 10.

In this case, as in the simple loop, the E. M. F. (and the

resulting current) passes through one complete cycle during each revolution, so that the frequency is equal to the number of revolutions per second. The frequency of the alternating currents used for lighting is usually 125, although, recently, lower frequencies, down to about 60, have been adopted. It is evident that it would be very difficult to run an armature in a bipolar field at a number of revolutions per second equal to even the lower of the above frequencies, and for this reason it has been necessary to use multipolar fields for alternators.

With a multipolar field, the widths of the neutral spaces and of the fields are about equal in the best machines, and a number of coils, each equal in width to the width of a neutral space, is wound on the core, the number of coils being made equal to the number of poles, and arranged, as in the bipolar machine described, so that each coil is in the same part of a field or neutral space at the same instant.

It is evident that the E. M. F. of each coil passes through one complete cycle during the time that it is passing under two successive poles. This being the case, the frequency is then equal to the revolutions per second multiplied by the number of *pairs* of poles.

For example, in a ten-pole machine running at 1,500 revolutions per minute, the frequency is

$$\frac{1,500}{60} \times \frac{10}{2} = 125.$$

27. For these multipolar machines, ring windings are seldom used in this country. One of the commonest types of alternators is shown in Fig. 11. This machine is provided with eight radial poles and eight coils on the armature, giving a style of winding in common use for machines used on lighting circuits. In Fig. 11, the coils C are shown bedded in the slots p on the periphery of the iron core P, which is built up of thin iron stampings. These coils are heavily taped and insulated and are secured in place by hardwood wedges w. This makes a style of armature not easily injured, and the use of the dovetailed slots and wooden

wedges does away with the necessity of band wires. It is necessary that the space between the two halves of any one coil be made about equal to the width of the field, as represented in Fig. 11; for, if this were not the case, a part of

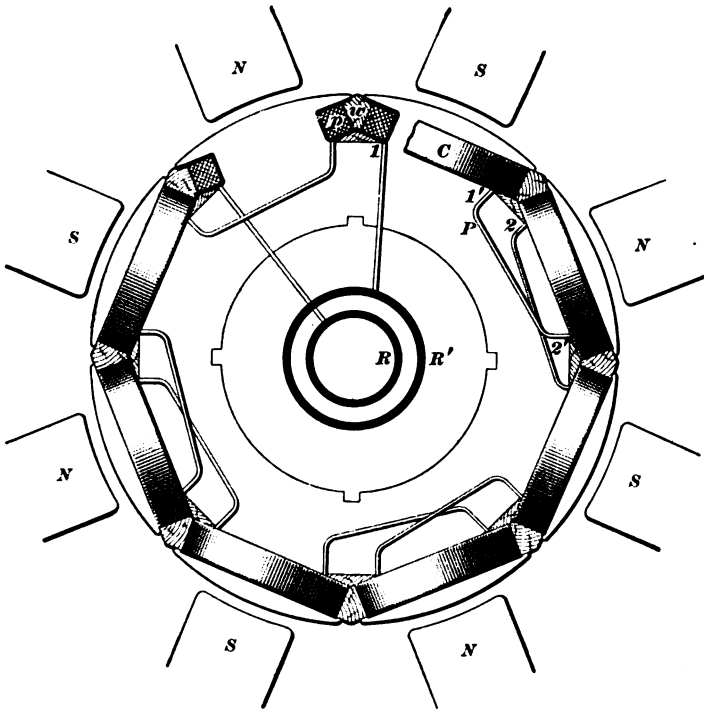

FIG. 11.

each of the two halves would be in the same field at the same time, which would cause the E. M. F.'s generated to oppose each other.

28. Alternators are generally required to furnish a high voltage, and, in consequence, the armature coils are usually connected in series. Care must be taken, in connecting up such windings, to see that the coils are so connected that the E. M. F.'s do not oppose one another. By laying out a diagram of the winding, the manner in which the coils must be connected will be easily seen. This has been done

in Fig. 12, which shows diagrammatically the winding of the armature in Fig. 11. The coils are represented by the heavy sector-shaped figures, and the connections between

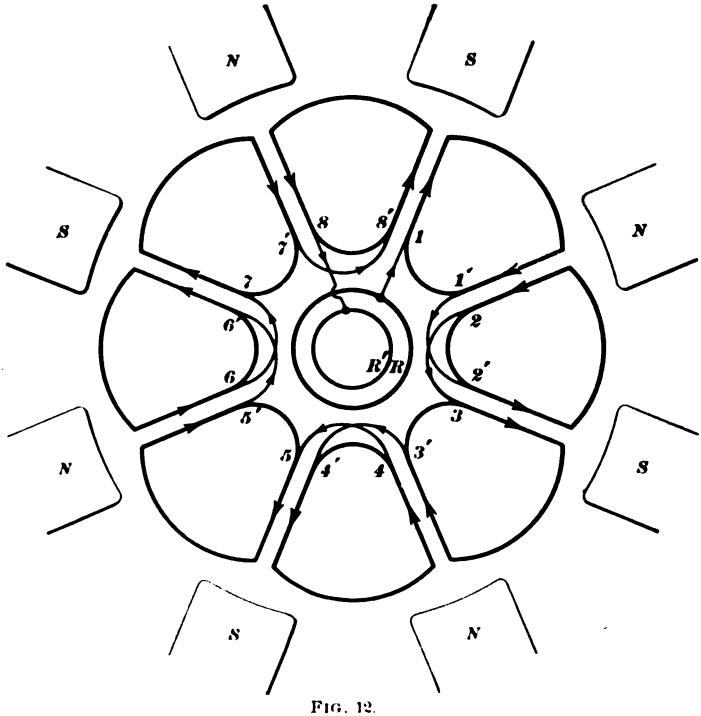

FIG. 12.

them by the lighter lines. The circles in the center represent the collector rings of the machine, and the radial lines that part of the coil which lies in the slot, that is, the part in which the E. M. F. is generated. The circular arcs joining the ends of the radial lines represent the ends of the coils which project beyond the laminated armature core. The drawing is made to show the coils at the instant the conductors in the slots are opposite the centers of the pole-pieces. At this instant, the E. M. F. will be assumed to be at its maximum value, and we will suppose that the direction of rotation is such that the conductors under the north poles have their E. M. F.'s directed from the back of the

armature towards the front. These E. M. F.'s will be denoted by an arrow-head pointing towards the center of the circle, since the inner end of the radial lines represents the front or collector-ring end of the armature. The E. M. F.'s in the conductors under the south poles must be in the opposite direction, or pointing away from the center. After having marked the direction of these E. M. F.'s, it only remains to connect the coils up so that the current will flow in accordance with the arrows. Starting from the collector ring *R* and passing through the coils in the direction of the arrows, it is seen that the connections of every other coil must be reversed; i. e., if *1*, *1'*, *2*, *2'*, etc., represent the terminals of the coils, *1'* and *2'* must be connected together, also *2* and *3*, and so on. The end *8* is connected to the other collector ring, and the winding thus completed. The connections of such a winding are quite simple; but if not connected with regard to the direction of the E. M. F.'s, as shown above, the armature will fail to work properly. For example, if *1'* were connected to *2*, *2'* to *3*, and so on around the armature, the even-numbered coils would exactly counterbalance the odd-numbered ones, and no voltage would be obtained between the collector rings. Of course, in this case, all the coils are supposed to be wound in the same direction, as is nearly always done in practice. The connections in the diagram, Fig. 12, are shown between the coils in Fig. 11. It should be noted that this constitutes an open-circuit winding; that is, the winding is not closed on itself, like that of a continuous-current drum or ring armature. A large number of alternator windings are of the open-circuit type, which is better adapted for the production of high voltages, because it admits of a larger number of turns being connected up in series.

29. Alternators are usually constructed to give a constant potential, and are generally compound wound for this purpose; but instead of a shunt winding, separate excitation is almost invariably used, a small constant-potential direct-current dynamo furnishing the necessary current.

This small dynamo is sometimes coupled directly to the end of the shaft of the alternator, but more usually belted to a pulley on that shaft.

The series coils of the field-magnets are excited by the main current of the alternator, just as in direct-current machines. As the alternating current could not be used directly for this purpose, a commutator is used, which changes the alternating current into a direct but pulsating current, in which form it is used to excite the series coils.

This commutator has as many segments as there are poles, but alternate segments are connected together, making practically a two-part commutator.

Two brushes rest upon this commutator at opposite points, and are so adjusted that they rest on two adjacent segments only at the moment that the E. M. F. of the armature winding is zero, so that the alternating current is changed to a pulsating current, just as described in Art. **14,** Part 2.

30. If the series coils alone were connected between these brushes, their self-induction would oppose both the rise and fall of the current, and would therefore cause sparking at the commutator; hence, a resistance coil, so wound as to have very little self-induction, is connected in parallel with the series coil, which so acts as to steady the current through the series coils and prevent the sparking at the commutator, in addition to providing a means for varying the degree of compounding of the series field. In some machines, a revolving shunt is connected across the terminals of the rectifier, thus cutting down the current to be rectified and thereby decreasing sparking.

This circuit through the series coils being in series with the armature winding, it forms a loop in that winding, and may be connected in at any convenient place; a point in the winding about half way between the ends which are connected to the collector rings is usually taken.

This is represented in Fig. 13, which is a diagram representing a 10-pole alternator, with a drum-wound armature of 10 coils, all connected in series. The beginning of coil *1* and that of coil *10* are both connected to one of the collector rings *K*, *K*, on which bear the brushes *B* and B_1, which are connected to the line terminals *T* and T_1, as represented. Coil *5* is not connected directly to coil *6*, but its

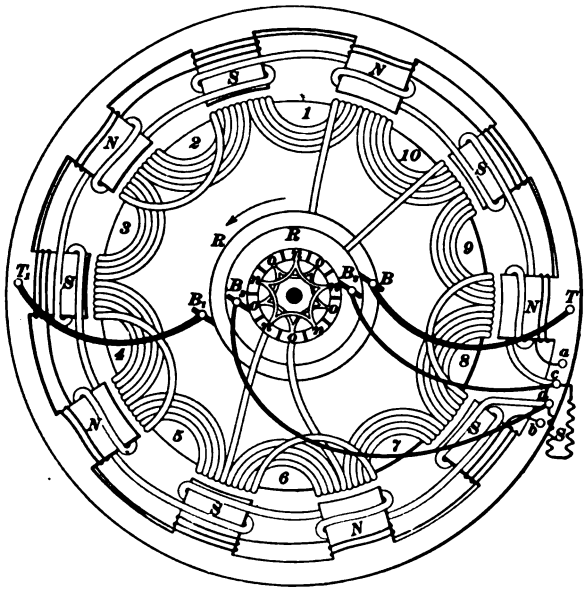

FIG. 13.

end is carried to one of the sections *n*, *n*, *n*, *n*, *n* of the commutator, these sections being all connected together as represented.

The end of coil *6* is connected to one of the rest of the sections *o*, *o*, *o*, *o*, *o* of the commutator, these being also all connected together.

At opposite points on this commutator rest two brushes B_2 and B_3, which are connected to the terminals *c*, *d* of the series winding on the fields. To these terminals the

resistance S is also connected, it being in parallel with the series coils.

The permanent excitation of the machine is supplied by a separate direct-current dynamo, as stated, which is connected to the terminals a, b.

In the position shown, the armature coils are most active, and the brushes B_1 and B_3 rest upon the middle of the commutator segments. At this instant, the path of the current flowing is as follows: Entering at terminal T, it passes through brush B to the inner collector ring, then through coils *10*, *9*, *8*, *7*, and *6* of the armature winding, then to one of the commutator segments marked o, and through brush B_3 to terminal d of the series field coils. Here it divides between these series coils and the resistance S, and reunites at terminal c, from whence it passes through brush B_2 to one of the commutator segments marked n, then through coils *5*, *4*, *3*, *2*, and *1* of the winding to the outer collector ring, then through brush B_1 to terminal T_1, and out through the external circuit.

As the armature revolves, bringing the coils into the neutral spaces, its current falls to zero. At this point, the brushes B_2 and B_3 pass from segments n and o to segments o and n, respectively, so that when the coils enter the fields again, and the current flows in the opposite direction through them, the direction of the current through the series winding is not reversed, but remains in the same direction as before.

It will be seen that the difference of potential between brushes B_2 and B_3 is only that due to the drop in the series coils and the resistance, which are in parallel. The difference of potential, therefore, between either of these brushes and one of the main brushes is practically the same, being equal to $\frac{1}{2}$ the total E. M. F. generated in the coils.

The above arrangement is that generally used in this country, although the type of the field-magnets and the details of construction vary considerably in the different machines.

MULTIPHASE ALTERNATORS.

31. The **phase** of an alternating current refers to the period of time at which it is at some particular point of its cycle; this term is generally used in comparing two or more different alternating currents. For example, if two alternating currents of the same frequency arrive at similar points in their cycles, the maximum or the zero-points, for instance, at the same instant, the two currents are said to be *in phase;* while if one current does not arrive at its maximum value at the same instant that the other does, the two currents are said to *differ in phase.*

The amount of this difference can be expressed in degrees, just as is the difference between any two points in the cycle of a single alternating current. (See Art. **24.**) Thus, if of two alternating currents, one reaches its maximum value at the same instant that the other is zero, they differ in phase by $\frac{1}{4}$ cycle, or 90°, and every point in the cycle of one current is 90° ahead of (or behind) the similar point in the cycle of the other current.

32. The alternators which we have been considering have a single winding and furnish only one current; for this reason, when it is desired to make a distinction, these machines are called **single-phase** alternators, and their current a single-phase current. The word *monophase* is also used to express the same meaning. For certain applications, alternators are provided with several windings, so arranged as to each give an alternating current differing in phase from the others. Such a machine is called, in general, a **polyphase** or **multiphase** alternator. Those in general use have either two or three separate windings, and are called **two-phase** or **three-phase** alternators, as the case may be.

Two-phase armatures can be considered as the windings of two single-phase machines mounted on one core, the two windings being separated 90° in the case of a two-pole machine. That is, when a coil of one winding would be directly under a pole, the corresponding coil in the second

winding would be midway between that pole and the next.

The two currents can be collected in two ways, namely: (1) by means of four collector rings, and (2) by means of three collector rings. To illustrate the former case, Fig. 14 may be referred to. This represents the two windings of a

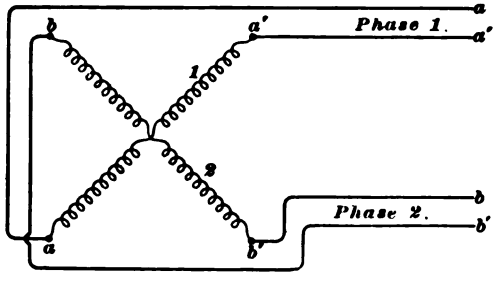

FIG. 14.

two-phase machine in a two-pole field. A displacement of 90° between the two currents calls for a similar mechanical displacement between the two windings. If four wires are used, the two circuits are independent of each other. The windings are represented by coils *1* and *2*, connected to the collector rings *a*, *a'* and *b*, *b'*. These windings, as was stated, have no electrical connection with each other and connect to two distinct circuits.

33. Sometimes, instead of using two distinct circuits with four collector rings, a common-return wire is employed,

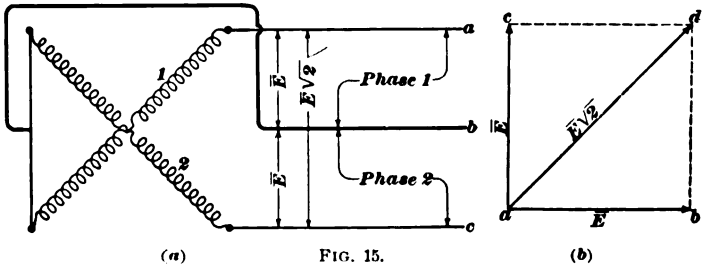

(*a*) FIG. 15. (*b*)

as indicated in (*a*), Fig. 15. Here one end of each of the phases is joined to a common-return wire, and but three

collector rings are necessary. If $\bar{E}$ represents the E. M. F. generated per phase, the voltage between *a b* and *b c* will be $\bar{E}$, while that between *a c* will be $\bar{E}\sqrt{2}$. This will be understood by referring to (*b*), Fig. 15, the E. M. F. between *a* and *c* being the resultant of the two E. M. F.'s $\bar{E}$ at right angles to each other.

34. In some two-phase machines, the armature is wound with the equivalent of a series-path continuous-current winding, and four collector rings and independent circuits are then required to avoid short-circuiting portions of the armature. If a closed-coil continuous-current winding, as is represented in Fig. 16, is used in a two-pole field, a single-phase alternating current can be obtained by connecting two collector rings to opposite points of the winding, as at *1* and *3*. Connecting two *opposite* points will give the highest E. M. F. that can be obtained in this manner. If on the same armature we make connection to two other opposite points *2* and *4*, situated midway between *1* and *3*, we shall have in circuit *2'–4'* a single-phase alternating current differing in phase by 90° from that in circuit *1'–3'*. To obtain a three-wire two-phase circuit from this sort of winding, it is evident that there could be no combination of the indicated circuits made, as a portion of the winding would be short-circuited thereby. Instead, three of the four wires are used, as *1'*, *2'*, and *3'*. In this case, the two phases are *1* and *2* and *2* and *3*. Taking the E. M. F. per phase in the first instance to be E, in the latter case its value would be $\frac{E}{\sqrt{2}}$. The E. M. F. across the two outside wires *1* and *3* would be equal to E. The current in the common-return wire making connection at *2* will be $\sqrt{2}$ times that in each of the outer wires.

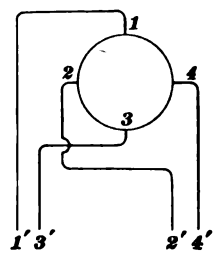

FIG. 16.

The graphical representation of these two currents shows that their sum at any instant is never as much as twice the

maximum of one of the currents; this is represented in Fig. 17.

In this diagram, *1* and *2* are the curves of the two currents, their difference in phase being 90°. It will be readily seen that there are parts of the cycle when the two currents are equal in value, but in opposite direction, as at 135° and 315°, and their sum at these points is then zero. At points

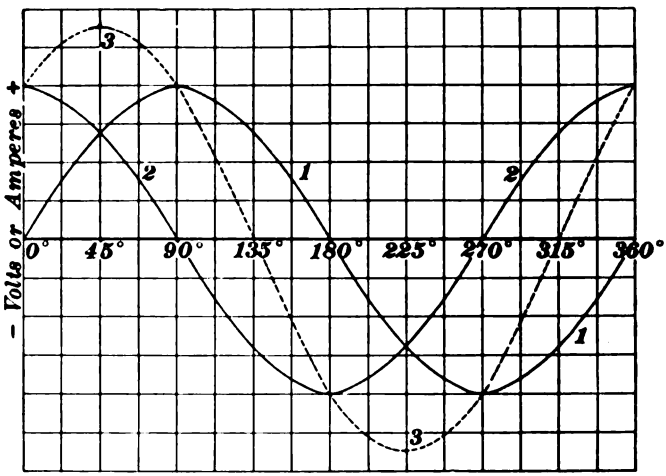

FIG. 17.

90° from these, the currents are again equal, but in the same direction, so that their sum is a maximum. Between these points their sum varies, its value at any instant being indicated by the dotted curve *3–3*. It will be seen that the maximum point of this curve is about 1.4 times the maximum of either of the others, and occurs 45° ahead of the maximum of the one and 45° behind the maximum of the other; consequently, the sum of the two curves which differ 90° in phase is a similar curve which differs in phase 45° from each of the others.

35. In three-phase machines, three windings are used, giving three separate currents differing 120° in phase;

these are graphically represented in Fig. 18. It will be seen from this diagram that at any instant *the amount of current flowing in one direction is equal to the amount flowing in the opposite direction.* For example, at the moment when the current represented by curve *2* is at its maximum, as at 90°, the other two currents are in the opposite direction, and are each equal to half their maximum value; their sum is then equal and opposite to the

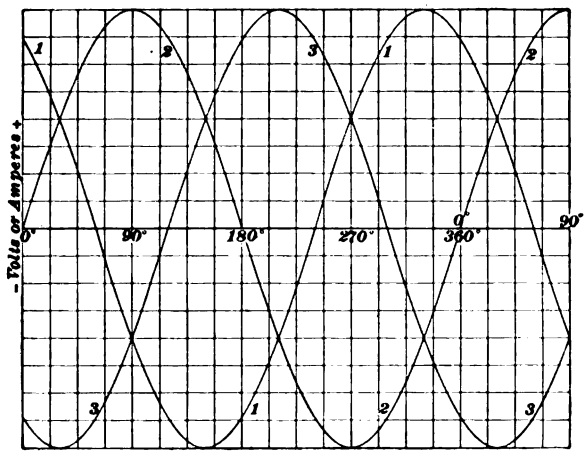

FIG. 18.

other current. At 180°, when curve *2* is at zero, the other two curves indicate that the currents are equal in value and opposite in direction. At any other part of the cycle, the above statement still holds true, as will be seen by measuring off with a pair of dividers the vertical distances of the three curves above or below the base line at any point, and comparing the sum of the distances found below the line with that of those found above it.

This property of the three-phase current has a very important result, namely, that only three wires are required for the three separate currents, since at any instant some one of the wires can act as a return conductor for the current

in the other two. This also allows the use of but three collector rings on the armature windings, one winding being connected either between each two rings or between one of the rings and a common junction. The former is represented in the diagram, Fig. 19, the latter in the diagram, Fig. 20. In each, R, R_1, and R_2 are the three collector rings, on which bear the brushes B, B_1, and B_2, and to which are connected the three armature windings *1*, *2*, and *3*. In Fig. 19, winding *1* is connected between rings R and R_2, winding *2* between rings R and R_1, and winding *3* between rings R_1 and R_2; while in Fig. 20, windings *1*, *2*, and *3* are respectively connected between rings R, R_1, and R_2, and a common junction *o*. The method of connection shown in Fig. 19 is known as the Δ (delta) or mesh connection. That shown in Fig. 20 is known as the **Y** or star connection.

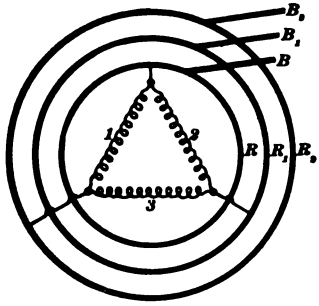

FIG. 19.

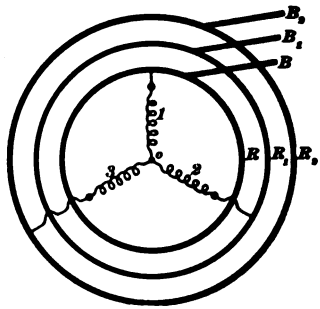

FIG. 20.

It should be understood that the above representations (Figs. 19 and 20) are merely *diagrammatic;* the separate windings are actually wound on the core in the same manner as illustrated in Fig. 12; the space between the two parts of each coil of each winding being made great enough to admit the coils of the other two windings, so that the surface of the core is entirely covered.

It will be seen that the method of connecting the windings shown in Fig. 20 is the same as is used in the Thomson-Houston constant-current open-coil dynamo (see Art. **20**), collector rings being here substituted for the commutator segments of that machine.

PROPERTIES OF THE ALTERNATING CURRENT.

36. It has been pointed out (Art. **70**, Part 2) that the heat generated in a conductor by a current, that is, the loss, is equal to $C^2 R$. As the strength of the current changes at every instant in an alternating-current circuit, it is evident that the heat generated also varies in the same manner; the temperature of the conductor does not correspondingly fluctuate, because the variations in the current are too rapid at the frequencies commonly used, but instead rises to some value where it remains steady. Now, if a certain direct current will cause the temperature of a conductor to rise to a certain point, it is evident that an alternating current may be sent through this same conductor, which, under the same conditions, will cause its temperature to rise to the same point, in which case the *effective* strength of the alternating current will be the same as the strength of the direct current.

In order that the alternating current may fulfil these conditions, the *mean* or *average* of the *square* of all its different values during a complete cycle must be equal to the square of the direct current with which it is compared; then the *square root* of this *mean square* will be its *effective strength*, which may be expressed in amperes.

As in a circuit which does not have any self-induction, the current is directly proportional to the E. M. F., it is further evident that the *effective* E. M. F. of an alternating current is also equal to the square root of the mean square of the various values of the E. M. F. which occur throughout the cycle.

When the form of the curve is about that shown in Figs. 17 and 18, as is usually the case, the effective current is equal to (very nearly) .707 of its maximum value, as is also the E. M. F. In speaking of an alternating current of so many amperes or volts, the *effective* current strength or voltage (.707 of the maximum) is meant, unless otherwise stated.

37. When the external circuit of an alternator is completed, the self-induction of that circuit prevents the current

from being proportional to the E. M. F. of the alternator; that is, when the E. M. F. is rising towards its maximum, the tendency of the current to increase is opposed by the self-induction of the circuit, and when the E. M. F. begins to decrease towards zero, the self-induction tends to keep up the current. In other words, the current *lags behind* the E. M. F.

If the circuit has little self-induction, this lag will be very slight; but if the self-induction is considerable, the lag is also considerable, and its effect must be considered.

If the current lags behind the E. M. F., C does not equal $\frac{E}{R}$, if E represents the applied E. M. F. as in the case of direct currents. This is due to the E. M. F. of self-induction, which opposes any change in the current due to a change in the applied E. M. F.; so that the *applied* E. M. F. which is sending the current through the circuit at any instant is equal to the *difference between* the *actual* E. M. F. used in overcoming resistance and the *counter* E. M. F. (that due to self-induction) at the same instant. The difference is here taken because the counter E. M. F. of self-induction is in itself negative, i. e., it tends to prevent the current from changing. If we considered the E. M. F. necessary to *overcome* self-induction (the equal and opposite of the E. M. F. of self-induction), then the *applied* E. M. F. would be equal at each instant to the *sum* of the E. M. F. necessary to send the current through the resistance and that necessary to *overcome* the self-induction. This will be understood from the curves in Fig. 21.

38. To find the applied E. M. F. necessary to send a given (alternating) current through a circuit having a certain resistance and a certain self-induction, it is necessary to find the E. M. F. due to the self-induction at various instants during each cycle. The E. M. F. required to overcome resistance being directly proportional to the current, the difference between it and the counter E. M. F. (of self-

induction) at any instant is the applied E. M. F. required. It is to be observed that if at any instant the signs of the two values are opposite, i. e., if one is + and the other − , the actual difference between them is the *sum* of their numerical values.

The E. M. F. of self-induction is, of course, proportional to the rate at which the lines of force generated cut the conductors of the circuit, that is, the *rate at which the number of lines of force generated changes*. This is in turn proportional to the *rate at which the strength of the current changes*, which is greatest when the actual value of the current is zero, for then it is changing from a certain strength in *one* direction to the same strength in the *opposite*, and is least (zero) when the strength of the current is at its maximum, for then the current is not changing at all.

39. If the instantaneous values of the current and the resulting E. M. F. of self-induction are graphically repre-

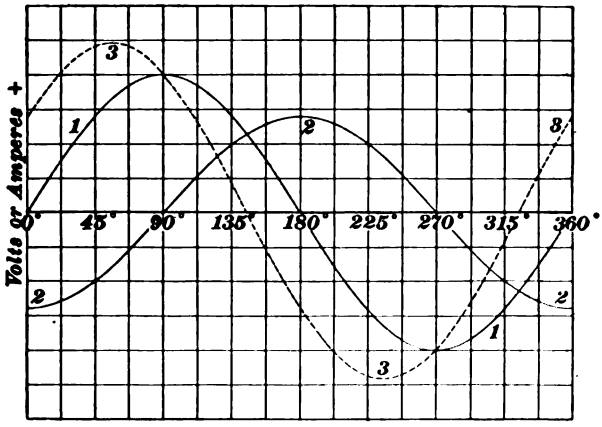

FIG. 21.

sented, the latter will be found to be a curve similar in shape to the current curve, and of the same frequency; but as its maximum value occurs at the instant the current curve is

zero, the *difference in phase* (see Art. **31**) between the two curves is 90°.

This is represented in Fig. 21, curve *1* being the current curve and curve *2* the curve of the E. M. F. of self-induction.

As the *actual* E. M. F. required to send the current through the resistance is of necessity proportional to that current, it is evident that by properly choosing the scale to which it is drawn, the current curve (curve *1*, Fig. 21) may also represent the curve of this *actual* E. M. F.

Considering this to be the case in Fig. 21, the *applied* E. M. F. curve may be constructed by taking the difference between the number of vertical divisions between curves *1* and *2* and the base line at various instants (or the *sum*, if one is + and the other −), and taking the result as the distance between the base line and the applied E. M. F. curve at those instants; in other words, applying the principle given in Art. **38.**

This applied E. M. F. curve, so constructed, is represented by curve *3*, Fig. 21.

It will be seen that in this curve for a part of the time the E. M. F. of self-induction acts in the *same* direction as the applied E. M. F., while at other times it acts in the opposite direction. The effect of this is, as stated in Art. **37,** that the current curve lags behind the E. M. F. curve, and the greater the self-induction the greater the lag.

The effect of this lag is to *increase the apparent resistance of the circuit;* for, as shown by Fig. 21, it takes a greater applied E. M. F. to force the current through the circuit than is represented by the drop (CR) due to that current; consequently, the energy expended in the circuit is *not* equal to the product of the E. M. F. and the current.

On this account, ordinary measurements of resistance, watts, etc., can not be relied upon if made with alternating currents, unless instruments especially designed for the purpose are used.

TRANSFORMERS.

40. The principal value of alternating currents is due to the fact that they can be *transformed;* that is, a current of 10 amperes at a pressure of 1,000 volts may be transformed to any higher or lower pressure, with a correspondingly less or greater current, and this transformed current will represent nearly as much energy as the original current. On this account, the energy necessary to operate, say a number of incandescent lamps, may be sent out from the dynamo at a high pressure and small current strength, so that only a small wire is needed to transmit the energy, effecting thereby a large saving in copper expense; then, at the point where the lamps are to be used, the current may be transformed from the high pressure used on the line, which would be dangerous to use inside a house, to a current of any convenient low pressure, which may then be used for operating the lamps.

This transformation is effected by setting up a mutual induction between a coil of wire connected to the source of the alternating current (the alternator), which coil is called the **primary,** and a second coil, called the **secondary,** which is connected to the circuit in which it is desired to utilize the electrical energy. See also Art. **6,** Part 2.

These two coils are wound upon a closed magnetic circuit of *laminated* iron, such as is used in armature cores. The lamination is intended to serve the same purpose here, namely, to prevent the generation of eddy currents which would otherwise be set up in the core, owing to the continual change of direction of the lines of force in the iron. This arrangement of primary and secondary coils, wound upon a magnetic circuit, is called a **transformer.**

41. The primary coil of a transformer has a great deal of self-induction, since a small current through it will cause a large number of lines of force to pass through the closed magnetic circuit, which lines cut the turns of the primary coil at a certain rate. Now, these lines also pass through the secondary coil, and cut its turns at the same rate, so that

if the number of turns in both primary and secondary is the same, the same E. M. F. will be set up in each; while if the number of turns differs, the E. M. F. set up in each will be in the *same ratio as the number of turns.* Thus, if the number of turns in the primary is 1,000 and in the secondary 100, the E. M. F. in the secondary will be $\frac{100}{1000} = \frac{1}{10}$ of that in the primary.

On account of its great self-induction, a high E. M. F. is required to send even a small current through the primary coil; in other words, the E. M. F. of self-induction is very nearly equal to the applied E. M. F., so that, generally speaking, the ratio between the applied E. M. F. of the primary and that generated in the secondary is the same as the ratio of the number of turns.

When the secondary circuit is closed, a current begins to flow in it. The effect of this current is to tend to send lines of force around the magnetic circuit of the transformer in the *opposite* direction to those which are due to the current in the primary coil; that is, to oppose the change in the lines of force which is producing the change in the current by changing the E. M. F.

This reduces the choking-back effect of the primary coil, and results in an increase in the primary current, which restores the number of lines of force to its original value. The result of these various reactions is that the E. M. F. generated in the secondary coil is (practically) constant, whatever the current in the secondary, within reasonable limits.

The current in the primary circuit is thus directly proportional to the current in the secondary *plus* a certain constant amount, which is necessary to send the lines of force through the magnetic circuit and to make up for the hysteresis and eddy-current losses in the iron due to the rapid reversals of the magnetism.

A transformer is similar in action to a dynamo and a motor connected together, and is subject to the same losses, except friction, which does not appear, since the material parts of the apparatus are stationary. The C^2R loss of

both primary and secondary and the hysteresis and eddy-current loss in the magnetic circuit are present, and may be calculated in a similar way as for a dynamo.

42. Fig. 22 represents one form of transformer, without the outside case. C is the *core*, or magnetic circuit.

The primary coil is divided into two parts, P and P_1, which are located on each side of the secondary coils S and S_1. The two parts of the primary coils are connected in series

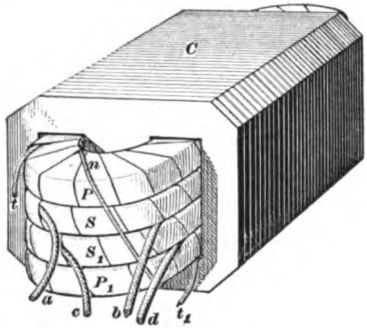

FIG. 22.

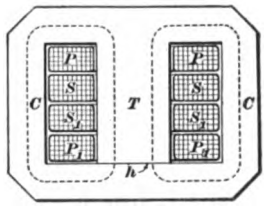

FIG. 23.

by the connection shown at n; t and t_1 are the primary terminals. The ends a and b of coil S and c and d of coil S_1 are brought out separately, in order that the two coils may be connected either in series or in parallel, as may be desired.

Fig. 23 represents a cross-section of this transformer, showing the method of construction. Here C represents one of the punchings of which the core is built up. In making the punching, it is cut across at h, leaving the tongue T, which is located between the coils $P\,P$, $S\,S$, $S_1\,S_1$, and $P_1\,P_1$. These coils are wound separately, and when completed are placed together and the punchings of the core slipped over them, the tongue T being bent out to one side until the punching is in place, when it is bent back again. The path of the lines of force through the magnetic circuit is indicated by the dotted lines. In some forms of transformers, the central piece T is made entirely separate;

a number of these pieces is assembled together and placed within the coils, the part *C* being slipped over. The magnetic circuit is then broken in two places, while in the case shown it is broken only at one place, *h*.

43. For ordinary work, transformers are wound for a primary E. M. F. of 1,000 or 2,000 (effective) volts, each secondary coil being wound to give about 50 volts. These may then be connected in parallel or in series, giving 50 or 100 volts as the secondary E. M. F. The efficiency of a 100-light transformer is about 96% at full load; in larger sizes the efficiency is higher, and in smaller sizes it is lower, as in dynamos.

44. It is often necessary to change direct current to alternating, and *vice versa*, and machines for accomplishing this are known as **rotary transformers.** The transformation might be effected by having an alternating-current motor coupled to a direct-current generator, simply using the alternating current to drive the generator. An arrangement of two machines is, however, not usually necessary, although such motor-generator sets are used to some extent. Rotary transformers are largely used for changing alternating current to direct for the operation of street railways, electrolytic plants, etc.

45. Suppose an ordinary Gramme ring armature to be revolved in a two-pole field, as shown in Fig. 24; a continuous E. M. F. will be generated and a continuous current obtained by attaching a circuit to the brushes *a*, *a'*. If, instead of the commutator, two collector rings were attached to opposite points of the winding, an alternating current would be obtained in a circuit connected to *b*, *b'*. If the machine be equipped with both commutator and collector rings, the armature may be revolved by means of direct current led in at the brushes *a*, *a'*, thus running it as a motor instead of it being driven by a belt. The conductors on the revolving armature will be cutting lines of force just as much as they were when the machine was driven by a belt;

therefore an alternating current will be obtained from the rings b, b'. In other words, the machine acts as a transformer, changing the direct current into a single-phase alternating current. If the operation be reversed and the machine be run as an alternating-current motor, the alternating current will be transformed into a direct one.

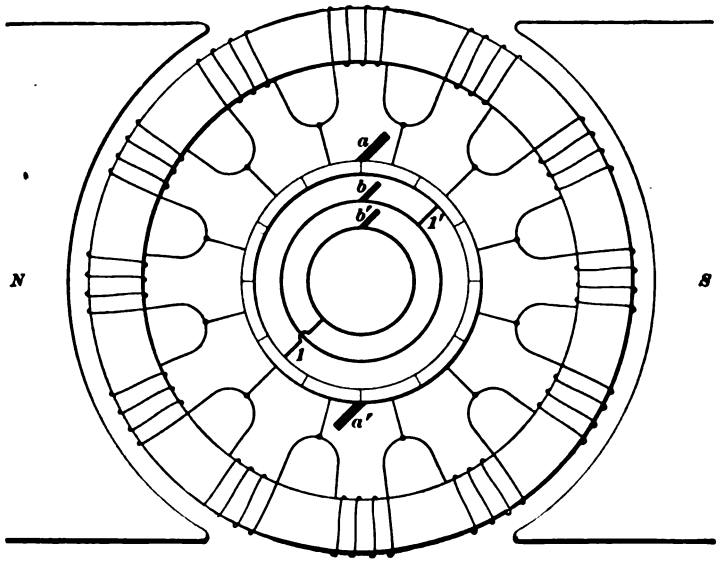

FIG. 24.

In the above single-phase rotary transformer, it is evident that the maximum value of the alternating E. M. F. occurs when the points 1, $1'$ to which the rings are connected are directly under the brushes a, a'; that is, the maximum value of the alternating E. M. F. is equal to the continuous E. M. F. For example, if the continuous E. M. F. were 100 volts, the *effective* volts on the alternating-current side would be 70.7, because the effective value is .707 times the maximum value. Therefore, if $\bar{E}$ is the alternating voltage and V the direct, we may write for a single-phase rotary transformer,

$$\bar{E} = .707\, V. \qquad \textbf{(1.)}$$

46. By connecting four equidistant points of a winding (similar to that described in Art. **45**), as in Fig. 17, to four collector rings, we would have a two-phase rotary transformer. The two phases would be related as shown in Fig. 17, and the E. M. F. of each phase would be determined in exactly the same way as in the case of a single-phase rotary transformer, such as described in Art. **45.**

47. By connecting three equidistant points of a winding, such as that described in connection with single-phase rotary transformers (Art. **45**), a three-phase transformer is obtained. Since all direct-current, constant-potential armatures have closed circuit windings, it follows that the connections on the alternating side of a three-phase rotary transformer are always Δ, the Y connection not being practicable. If $\overline{E}$ be the effective voltage between the lines on the alternating side of a three-phase rotary transformer and V the voltage of the continuous-current side,

$$\overline{E} = .612\, V. \qquad (2.)$$

48. In the rotary transformers, whose principles were just shown, the ratio of transformation is fixed, and the only way by which the transformed E. M. F. can be raised or lowered is to raise or lower the primary voltage, or the voltage of the current supplied to the machine. It would appear at first sight that a variation in field strength would cause a variation in the speed of a rotary transformer. This is true when *direct current* is supplied to the machine, the secondary voltage being alternating. However, when the primary voltage is *alternating*, the machine operates as an alternating-current motor, and a variation in field strength in no wise affects the speed at which the armature rotates. The reason for this will be seen when the subject of synchronous motors is taken up.

When the primary voltage is continuous, the speed would need to be varied in possibly only one case. That would be to synchronize the secondary alternating E. M. F. with a

corresponding alternating-current circuit with which the rotary transformer is to operate in multiple.

When the primary voltage is alternating, a variation in the secondary (continuous) E. M. F. is secured by varying the number of turns in the secondary of the transformer supplying the rotary transformer.

49. In order that the speed of rotary transformers may not be too high, it is usually necessary to make them with more than two poles. In fact, in general appearance, they are very similar to ordinary multipolar direct-current generators with the addition of the collector rings to one end of the armature. Fig. 25 shows one of these machines and

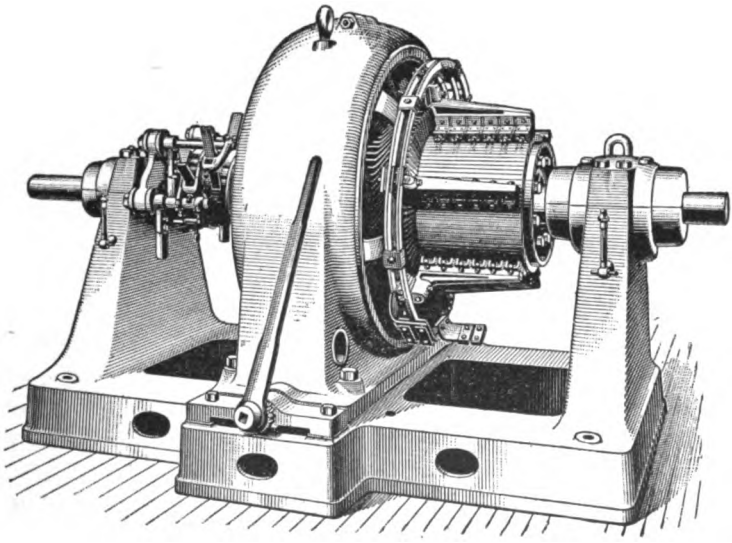

FIG. 25.

gives a very good idea as to the construction usually adopted. In this machine, the collector rings may be seen at the left-hand side of the machine. This particular machine is intended for electrolytic work calling for a large current output, and, for this reason, the commutator is larger than usual in order to obtain ample contact surface.

ELECTRIC MOTORS.

PRINCIPLES.

50. The principle upon which all electric motors operate is that given in Art. **25,** Part 2, namely, *that a conductor carrying a current will tend to move if placed in a magnetic field.* A motor then consists chiefly of a magnetic field and a conductor, or series of conductors, arranged to move in this field; that is, the requirements for a motor are the same as for a dynamo, and, as in a dynamo, the conductors are arranged around the surface of a drum or ring core, which rotates between the poles of an electromagnet.

Their difference can be summed up as follows: In the case of a dynamo, the mechanical energy delivered at the pulley rotates the armature in a magnetic field, and this results in the generation of an E. M. F. in the armature. In the case of a motor, an electric current is sent through the armature, and this results in a reaction between the armature conductors and the field, producing a rotation of the motor armature. The essential difference, therefore, between a dynamo and a motor is that in the case of the former, mechanical energy is transformed into electrical energy, while in the case of the latter, electrical energy is transformed into mechanical energy.

51. Motors may be divided into the same general classes as dynamos, according to the character of the current they require, as follows:

Constant-potential motors, which are supplied with a continuous current at a constant potential.

Constant-current motors, which are supplied with a continuous current of a constant strength.

Alternating-current motors, which are supplied with an alternating current.

CONSTANT-POTENTIAL MOTORS.

52. If the fields of a constant-potential dynamo are excited, and a current is supplied to the armature from some source, as represented at D in Fig. 26, so that the current enters at the brush $+B$, and passing through the winding in the direction indicated by the arrow-heads, leaves at

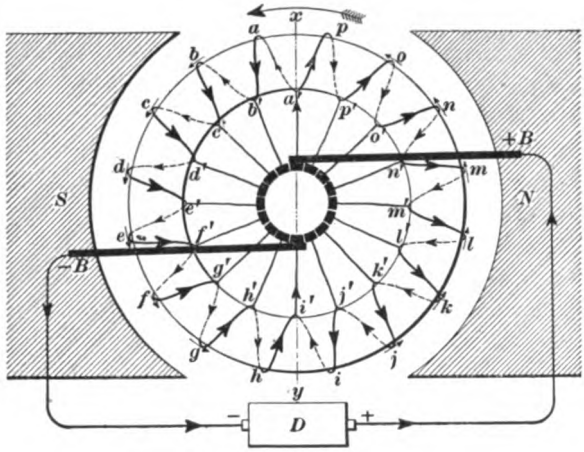

FIG. 26.

brush $-B$, it will be found by applying the thumb-and-finger rule given in Art. **26,** Part 2, that all the conductors under the S pole face, b, c, d, e, f, and g, will tend to move *downwards*, and all those under the N pole face, j, k, l, m, n, and o, will tend to move *upwards*, as indicated by the small arrows.

These forces combine to produce a tendency of the armature to rotate about its axis, as indicated by the large arrows, which tendency is called the **torque** of the motor.

The amount of this torque—which is usually expressed in **pound-feet,** that is, a certain number of pounds acting at a radius of a certain number (usually 1) of feet—depends upon (1) the strength of the field, (2) the number of conductors, (3) their mean distance from the axis of the

armature, and (4) the amperes in each conductor. In any given machine, the second and third conditions are constant, so that the torque depends upon the strength of the field and of the current.

53. If the armature is stationary, the E. M. F. required to send the current through the winding is only that necessary to overcome the drop, which is due to the resistance of the winding. If the torque exerted by this current is greater than the opposition to motion, so that it causes the armature to revolve, the motion of the conductors through the field generates in them an E. M. F. which is *opposed to the E. M. F. that is sending the current through the armature*, as will be seen by applying the thumb-and-finger rule given in Art. **8**, Part 2, to Fig. 26.

This opposing E. M. F., or **counter E. M. F.**, as it is called, then diminishes the effect of the applied E. M. F., so that the current is reduced, reducing the torque. Should the torque still be greater than the opposition to motion, the speed of the armature will continue to increase, increasing the counter E. M. F., and thereby further reducing the current and the corresponding torque, *until the torque just balances the opposition to the motion*, when the speed will remain constant.

54. At all times the drop of potential through the armature is equal to the *difference between the counter and the applied E. M. F.'s*, and as the product of this drop and the current represents energy wasted, it is desirable to make it as low as possible. In good motors of about 10-horsepower output, the drop in the armature is seldom more than about 5% of the applied E. M. F., and is less in larger machines.

This being the case, it is evident that if the armature is at rest, so that it has no counter E. M. F., and is connected directly to the mains, a very large current will flow through it, which would be liable to damage the armature. On this account an external resistance, called a **starting**

resistance, is connected in series with the armature when it is to be started. This resistance is made great enough to prevent more than about the normal current from flowing through the armature when it is at rest; as the armature speeds up and develops some counter E. M. F., this resistance is gradually cut out, until the armature is connected directly to the mains, and is running at its normal speed.

The energy represented by the product of the drop in the armature and the current is wasted; that represented by the product of the current and the rest of the E. M. F., that is, the counter E. M. F., is the energy required to keep the armature in motion. This energy is expended in overcoming the friction losses and core losses in the motor itself, which are of the same nature and effect as the similar dynamo losses (see Arts. **64** and **65,** Part 2), and also in overcoming the resistance to motion of whatever external apparatus is driven by the motor.

Aside from the comparatively small amount of current required to furnish the torque necessary for overcoming the losses in the motor itself, which is practically constant, the amount of current taken from the mains is directly proportional to, and varies automatically with, the amount of the external load, for if this external load is increased, the current which has been flowing in the armature can not furnish sufficient torque for this increased load, so that the machine slows down. This decreases the counter E. M. F., which immediately allows more current to flow through the armature, increasing the torque to the proper amount. If the external load is decreased, the current flowing furnishes an excess of torque, which causes the speed to increase, increasing the counter E. M. F. and decreasing the current until it again furnishes only the required amount of torque.

Since the counter E. M. F. is very nearly equal to the applied, it is only necessary for it to vary a small amount to vary the current within wide limits. For example, if the resistance of a certain armature is 1 ohm, and it is supplied

with current at a constant potential of 250 volts, then, when a current of 10 amperes is flowing through it, the drop is $10 \times 1 = 10$ volts, and the counter E. M. F. is $250 - 10 = 240$ volts. Now, if the current is reduced to 1 ampere, the drop is $1 \times 1 = 1$ volt, and the counter E. M. F. is $250 - 1 = 249$ volts; that is, the counter E. M. F. only varies $\frac{9}{240}$, or 3.75%, while the current varies $\frac{9}{10}$, or 90%.

55. The field-magnets of constant-potential motors may be either shunt wound or series wound.

If shunt wound, and supplied from a constant-potential circuit, the magnetizing force of the field coils is constant, giving a practically constant field. This being the case, the counter E. M. F. is directly proportional to the speed, so that variations of the load make only slight variation in the speed. A shunt-wound motor is then (practically) a *constant-speed* motor.

With series-wound motors, the strength of the field varies with the current. If the load on such a motor is reduced, the excess of torque makes the armature speed up, but as the resulting decrease of the current decreases the field strength, the armature must speed up to a much greater extent, in order to increase the counter E. M. F. to the right degree, than would be necessary if the field were constant. If the load is increased, the increase in the current so increases the field strength that the speed must decrease considerably, in order to decrease the counter E. M. F. by the right amount. The speed of a series-wound motor, then, varies largely with variations in the load.

An advantage of the series motor is that if a torque greater than the normal is required, it can be obtained with less current than with a shunt motor, since the increased current increases the field strength, and the torque is proportional to both these factors (Art. **52**).

56. It would not be practicable to make the field strength of a shunt motor as great as is possible to get with

a series motor, since it would require a very large magnetizing force (Art. **35,** Part 2), and with the shunt winding, this extra magnetizing force would have to be expended all the time, whether the strong field was required or not, which would be very wasteful. In the series motor, however, this extra magnetizing force is expended only while it is needed.

A disadvantage of the series winding is that if all the load is taken off, the current required to drive the motor is very small, making a weak field, which requires such a high speed to generate the proper counter E. M. F. that the armature is liable to be damaged. In other words, the motor will *race* or *run away*, if the load is all removed. This can not occur with the shunt motor as long as the field circuit remains unbroken.

On account of the above features, shunt motors are used to drive machinery that requires a nearly constant speed with varying loads, or which would be damaged if the speed should become excessive, such as ordinary machinery in shops and factories, pumps, etc. Series motors are used on street-cars, to operate hoists, etc., where, on account of the gearing used, the load can not be entirely thrown off, and the torque required at starting and getting quickly up to speed is much greater than the normal amount.

REGULATION.

57. The *torque* of a motor is a matter of current only; that is, for a given current, the torque will be the same whatever may be the speed, under otherwise the same conditions. The *speed* at which the armature runs is a matter of E. M. F. only; that is, with a given current the speed will be proportional to the applied E. M. F., or, more strictly, the counter E. M. F., other conditions remaining the same.

It has been shown that the torque will automatically regulate itself for changes in the load. The speed, however,

may be varied by varying the applied E. M. F., or the strength of the field. A change in speed may or may not result in a change in the torque required, depending on the character of the work done by the motor.

The simplest way to vary the applied E. M. F. is to insert a resistance, in series with the armature, similar to the starting resistance. By varying this resistance, the applied E. M. F. at the terminals of the motor is also varied, although the E. M. F. of the mains remains constant. It is evident that the energy represented by the drop through the resistance is converted into heat, and is thereby wasted; therefore, for great variations in speed this method is not economical, though often very convenient.

The applied E. M. F. may also be varied by varying the E. M. F. of the generator supplying the current; but this can only be done where a single generator is supplying a single motor or several motors, whose speed must all be varied at the same time; so that this method is used only in special cases.

If the strength of the field is changed, the speed necessary to give a certain counter E. M. F. will also be changed, and this gives a convenient method of varying the speed. If the strength of the field is lessened, the speed will increase, and if the field is strengthened, the speed will decrease. With shunt motors, the field may be weakened by inserting a suitable resistance in the field circuit, as in shunt dynamos; with series motors, the same result may be obtained by cutting out some of the turns of the field coils or by placing a suitable resistance in parallel with the field coils, as in series dynamos.

This method of regulation is also of limited range, since it is not economical to maintain the strength of the field much above or below a certain density. The resistance method described above being rather more simple, it is generally used. For special cases, such as street-railroad work, various special combinations of the above methods of regulation are used, which need not be described here.

CONNECTIONS.

58. Fig. 27 shows the manner in which a shunt motor is connected to the terminals + and − of the circuit. It will be seen that the current through the shunt field does not pass through the resistance R which is connected in the armature circuit. This is necessary, since to keep the field strength constant the full difference of potential must be maintained between the terminals of the field coil, which would not be the case if the rheostat were included in the field circuit, for then the difference of potential would be only that existing between the brushes $+B$ and $-B$. As on starting the motor this difference of potential is small, only a small current would flow through the field coils, which would generate such a weak field that an excessive current would be required to furnish the necessary torque for starting the motor.

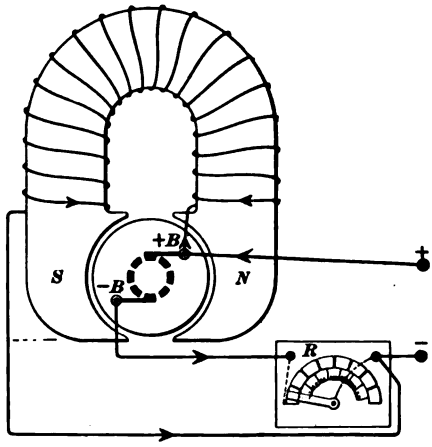

FIG. 27.

When connected as shown, however, the field is brought up to its full strength before any current passes through the armature, so this difficulty does not arise.

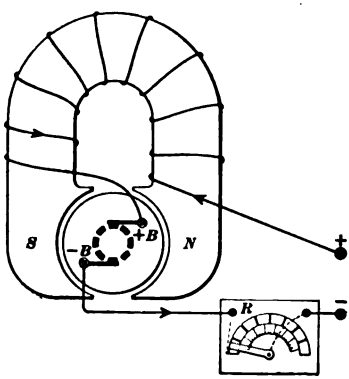

FIG. 28.

59. Since in a series motor the same current flows through both armature and field coils, the starting resistance may be placed in any

part of the circuit. The diagram in Fig. 28 illustrates one method of connecting a series motor to the line terminals + and −. Here the starting or regulating resistance R is placed between the − line terminal and the brush $-B$ of the motor.

To reverse the direction of rotation of a motor, it is necessary to reverse *either* the polarity of the field or the direction of the current through the armature. (See Art. **26,** Part 2.) It is usual to reverse the direction of the current in the armature, a switch being used to make the necessary changes in the connections.

Fig. 29 shows the connections of one form of reversing-switch. Two metal bars B and B_1 are pivoted at the points T and T_1; one is extended and supplied with a handle H, and the two bars are joined together by a link L of some insulating material, such as fiber. Three contact pieces a, b, and c are arranged on the base of the switch, so that the free ends of the bars B and B_1 may rest either on a and b, as shown by the full lines, or on b and c, as shown by the dotted lines. The line is connected to the terminals T and T_1, and the motor armature between a and b, or *vice versa*, a and c being connected together.

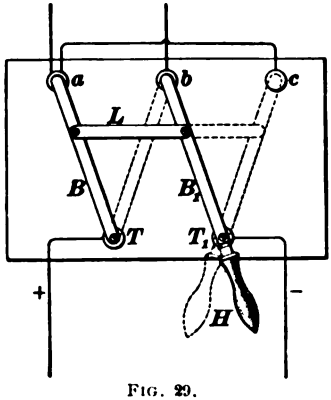

FIG. 29.

When the switch is in the position shown by the full lines, T is connected to a by the bar B, and T_1 to b by the bar B_1. If the switch is thrown by means of the handle H into the position indicated by the dotted lines, T is connected to b by the bar B, and T_1 to a by the bar B_1 and the connection between c and a. The direction of the current through the motor armature, or whatever circuit is connected between a and b, is thus reversed.

In order to reverse only the current in the armature, the reversing-switch must be placed in the armature circuit

only. Fig. 30 represents the connection for a reversing-shunt motor (*a*) and a reversing-series motor (*b*); + and − are the line terminals; *R*, the starting resistance; *B* and B_1,

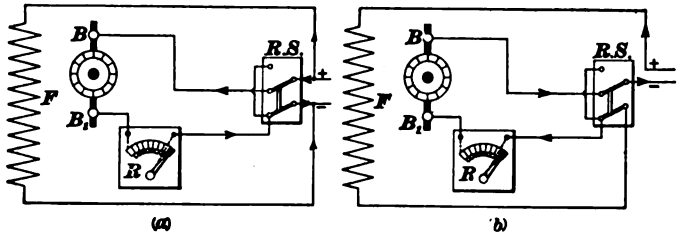

FIG. 30.

the brushes of the motor; and *F*, the field coil of the motor. Some manufacturers combine the starting resistance and reversing-switch in one piece of apparatus.

60. In connecting up motors, some form of main switch is used to entirely disconnect the motor from the line when it is not in use.

To prevent an excessive current from flowing through the motor circuit from any cause, short strips of an easily melted metal, known as **fuses,** mounted on suitable bases, known as **fuse boxes** or **cut-outs,** are placed in the circuit. These fuses are made of such a sectional area that a current greater than the normal heats them to such an extent that they melt, thereby breaking the circuit and preventing damage to the motor from an excessive current. The length of fuse should be proportioned to the voltage of the circuit, a high voltage requiring longer fuses than a low voltage, in order to prevent an arc being maintained across the terminals when the fuse melts.

If desired, measuring instruments (ammeter and voltmeter) may be connected in the motor circuit, so that the condition of the load on the motor may be observed while it is in operation. All these appliances, regulating resistance, reversing-switch, fuses, instruments, etc., are placed *inside* the main switch; that is, the current must pass through the main switch before coming to any of these appliances, so

that opening the main switch entirely disconnects them from the circuit, when they may be handled without fear of shocks.

61. To illustrate the manner in which these various apparatus are connected, the following example in connecting a series-wound motor is given:

EXAMPLE IN CONNECTING.—Draw a diagram showing the connections of a series-wound motor with reversing-switch, regulating resistance, ammeter, fuse boxes, main double-pole switch, and voltmeter, indicating the potential of the line inside the main switch.

Fig. 31 shows the connections that should be made. The terminals of the circuit supplying the current are connected to the upper contacts of the main switch *M. S.*, and the terminals of the motor circuit are connected to the lower contacts. A fuse box *F. B.* is placed in each side of the

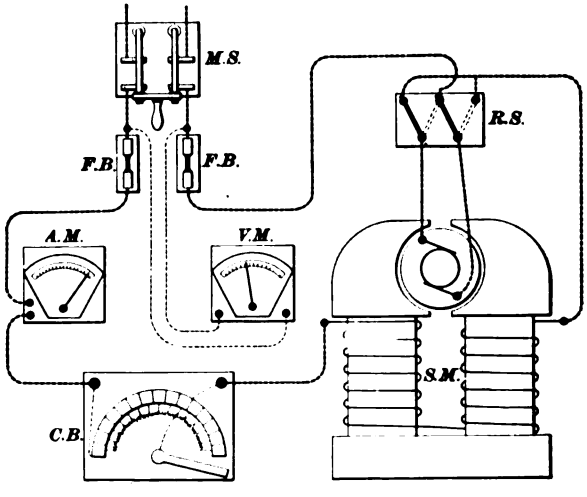

FIG. 31.

motor circuit, just inside the main switch. The voltmeter *V. M.* is connected to each side of the circuit just above the fuses, so if a fuse is blown, the voltmeter will still indicate the difference of potential between the mains if the circuit is "alive."

The armature terminals of the motor *S. M.* are connected to one side of the reversing-switch *R. S.*, the other terminals being connected to the fuse boxes, one directly, the other through the field coils of the motor, starting and regulating resistance *C. B.*, and ammeter *A. M.*

OUTPUT.

62. The *torque* of a motor corresponds to a certain number of *pounds pull* exerted at the circumference of the pulley, or at the pitch-circle of the gear, or, in general, at some radial distance from the center of the shaft. As stated, this torque is the same for a given current whatever the speed. But for each revolution of the motor, the point at which the pull (torque) is exerted moves through a certain distance, equal to 3.1416 × the diameter of the circle, or to 2 × 3.1416 × the *radius* of the circle at the circumference of which the torque is considered to act. Each revolution of the motor, then, when a certain torque is exerted, corresponds to a certain number of *foot-pounds of work done.*

This number of foot-pounds will be the same for a given torque, whatever the radius of the circle through which its point of application moves, for, if a radius be taken that is twice as long as another, the distance moved through will be twice as great, but the pull in pounds will be only half as much, so that their product remains the same. For the sake of uniformity, a standard radius of one foot is used, and the torque is expressed in *pounds at one foot radius.* See also Art. **52.**

It will be noticed that the words *moment* and *torque* have nearly the same meaning. If the distance from the center to the line of action of the force whose moment it is desired to express was always measured in feet, then the words moment and torque would have the same meaning.

The foot-pounds of work done in each revolution and the number of revolutions per minute being known, the foot-pounds of work done per minute, and from that the horse-power, may be found by the following formula:

If T represents the torque in pounds at one foot radius, and S the number of revolutions per minute, then the horsepower

$$\text{H. P.} = \frac{2 \times 3.1416\ TS}{33{,}000} = .0001904\ TS. \qquad \textbf{(3.)}$$

That is, *to obtain the horsepower of a motor, multiply 3.1416 by 2, this product by the torque expressed in pounds at one foot radius, and this product by the number of revolutions per minute; divide the final product by 33,000.* An alternative method is to use the constant .0001904, and multiply this by the product of the torque and speed expressed as above.

If the H. P. and the torque are known, the number of revolutions per minute may be found from a modification of the above formula:

$$S = \frac{33{,}000\ \text{H. P.}}{2 \times 3.1416\ T} = \frac{\text{H. P.}}{.0001904\ T}. \qquad \textbf{(4.)}$$

Or, if the H. P. and the number of revolutions per minute are known, the torque may be found from the formula

$$T = \frac{33{,}000\ \text{H. P.}}{2 \times 3.1416\ S} = \frac{\text{H. P.}}{.0001904\ S}. \qquad \textbf{(5.)}$$

63. Fig. 32 illustrates a method of measuring the torque of a motor by means of a **Prony brake.**

This brake consists of two blocks of wood B, B, made to fit the surface of the pulley P. These two blocks bear upon the pulley on opposite sides, as represented, and their pressure on the pulley is regulated by means of the thumb-nuts N, N on the bolts which hold the two parts of the brake together.

The lower of the two blocks of wood is extended in both directions, forming on the one side an arm A, which presses on the platform of a set of scales S, and on the other a place where weights W may be placed to balance the weight of the arm A. A spike, or lag-bolt, C should be driven through the end of the arm A to better locate the point where it presses on the scale platform.

If the pulley *P* is revolved in the direction indicated by the arrow, the friction of the brake will cause it to tend to rotate with the pulley, which will cause the spike in the end of the arm *A* to press down on the scale platform, and the amount of this pressure may be weighed by the scale-beam. The *product* of the number of pounds pressure and the *horizontal* distance *R* between the point *C* and the center of the pulley in feet, will give the torque in *pound-feet*.

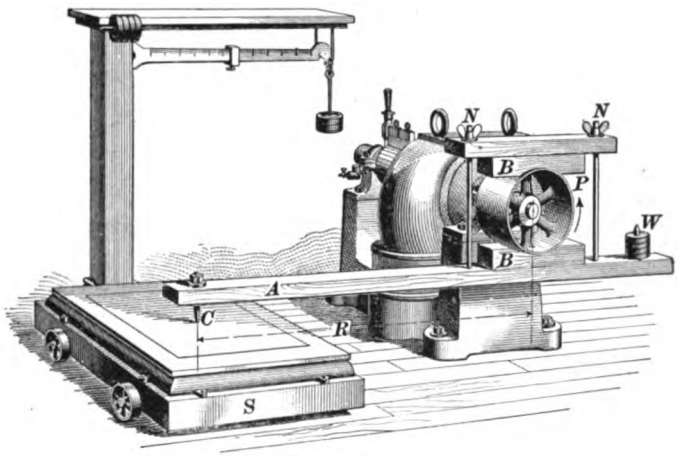

FIG. 32.

Then, if the number of revolutions per minute of the motor is counted, the horsepower absorbed by the friction of the brake, that is, the output of the motor, may be calculated by formula **3.** If at the same time the amperes input and the voltage at the motor terminals are measured, their product will be the watts input, and by reducing the output and the input to the same units, the efficiency may be calculated by dividing the output by the input. (See formula **2,** Part 2.)

64. The following example shows the application of the above rules and method of testing motors:

EXAMPLE.—A given shunt-wound motor is designed for an output of 10 H. P. and to be run on a constant-potential circuit of 230 volts.

When driving a certain piece of machinery, it requires an input (to both field and armature) of 35 amperes at 230 volts. It is desired to find the actual horsepower required to drive this machinery. The motor is disconnected from its load and a Prony brake rigged up as shown in Fig. 32. The thumb-nuts are screwed up until an ammeter in the motor circuit indicates that 35 amperes are flowing through the motor circuit, and the voltage at the terminals is found to be 230 volts. Under these conditions, the pressure on the scale platform is found to be 24 pounds, and the speed of the motor 800 revolutions per minute. The horizontal distance between the center of the shaft and the point where the brake arm rests on the scales is 30 inches. What is the output of the motor at this load in horsepower, and what is its efficiency?

SOLUTION.—The distance R (Fig. 32) being 30 in., or $2\frac{1}{2}$ ft., and the pressure on the scales being 24 lb., the torque of the motor is $24 \times 2\frac{1}{2} = 60$ pound-feet. Substituting this value for T, and 800 for S, in formula **3**, gives H. P. $= \frac{2 \times 3.1416 \times 60 \times 800}{33{,}000} = \frac{301{,}593.6}{33{,}000}$.

NOTE.—As the instruments used are liable to slight errors, four figures (other than the zeros) left in the calculations will be near enough; if the last figure dropped is equal to 5 or more, the last figure *kept* should be increased 1.

Then, $\frac{301{,}600}{33{,}000} = 9.1393$, or 9.139 H. P. is the output of the motor. Ans.

The input is $35 \times 230 = 8{,}050$ watts. Reducing 9.139 H. P. to watts gives $9.139 \times 746 = 6{,}817.694$, or 6,818 watts.

Then, by formula **2**, Part 2, the efficiency $\mathbf{E} = \frac{6{,}818 \times 100}{8{,}050} =$ 84.7 per cent. Ans.

65. The loss represented by the difference between the input and the output is made up of exactly the same elements as the total loss in dynamos; that is, mechanical friction, core loss, field loss, and armature loss. As in dynamos, the armature loss and field loss may be calculated from the resistance of the armature and field coils, remembering that in a shunt motor the *armature* current is *less* than the *total* current, since the field circuit is in parallel with the armature. The core loss and friction taken together evidently equal the difference between the total loss and the sum of the armature and field losses; they can not be separated without making special tests.

In a shunt motor, the field loss, core loss, and friction are all practically constant at all loads, since the speed is nearly constant. This being the case, the *watts required to run the motor without any external load whatever* is a measure of these losses plus a certain small amount of armature C^2R, which may be calculated, though it is usually small enough to be neglected without much error. This being the case, the output which a motor will give at any given input will be very closely equal to that input less the watts required to run the motor free, and also less the armature C^2R loss at the given input; from this the efficiency may also be calculated. To determine the efficiency of the motor at any load within its rated capacity, then, it is only necessary to carefully measure its input at no load (running *light* or *free*), and to make the above calculation. This, however, will give no idea of its performance as to heating and sparking, under the calculated load, so that the Prony-brake test is more satisfactory.

For example, a certain shunt-wound motor requires a current of 1.2 amperes at 500 volts when running *free*, i. e., without external load. Its armature resistance is 2.4 ohms and its field resistance is 834 ohms. Its field current is then $\frac{500}{834} = .5995$ ampere, or say .6 ampere. Its armature current is then $1.2 - .6 = .6$ ampere, and its armature loss only $.6 \times .6 \times 2.4 = .864$ watt, which may be neglected.

The input amounts to $1.2 \times 500 = 600$ watts, of which the field loss is $.6 \times 500 = 300$ watts.

If the efficiency when taking 10 amperes at 500 volts is wanted, it may be found from the above figures, as follows: Total input, $10 \times 500 = 5{,}000$ watts. Field loss and core loss and friction combined amount to 600 watts, as found above. The armature loss amounts to $9.4 \times 9.4 \times 2.4 = 212.064$, or say 212 watts. The total loss is then $600 + 212 = 812$ watts, so that the output is $5{,}000 - 812 = 4{,}188$ watts, and by formula **2**, Part 2, the efficiency $\mathbf{E} = \frac{4188}{5000} = .837$, or 83.7%. In a similar manner the efficiency at any other input, or the input required for any given output, may be found.

The input, consequently the output, of constant-potential motors is limited by the same factors that limit the output of dynamos, namely, heating and sparking.

In motors, as the direction of the current, for the same direction of the lines of force of the field and of rotation, is *opposite* to that in a dynamo, the armature reaction shifts the neutral space in the opposite direction, that is, *backwards, against* the direction of rotation. (Compare Fig. 26 with Fig. 28, Part 2. See also Art. **29,** Part 2.) Consequently the brushes of a motor must be shifted *backwards* as the load increases.

THE CONSTRUCTION OF CONSTANT-POTENTIAL MOTORS.

66. It should be clear that any direct-current constant-potential machine can be used either as a motor or a dynamo. If supplied with current, it turns and furnishes mechanical power; if supplied with mechanical power, it turns and furnishes an E. M. F. which can be used to supply a current. Consequently, the statements already made concerning the construction of dynamos apply equally well to the construction of motors, and the same varying types of field-magnets, bipolar and multipolar, are used with either drum-wound or ring-wound armatures. (See Figs. 45 and 49, Part 2.)

For certain special applications of motors, such as for street-cars, locomotives, and the like, certain features must be introduced in the design to meet the peculiar conditions under which the motor is to operate; these features need not be discussed here.

EXAMPLES FOR PRACTICE.

1. A certain shunt-wound motor gives an output of 28 H. P. and requires an input of 96.6 amperes at 240 volts. Its armature resistance is .096 ohm and its field resistance 150 ohms. Find the per cent. of the above input lost in the core and in friction combined. Ans. 4.51%.

2. What is the counter E. M. F. generated in the above motor, when running under the conditions given? Ans. 230.88 volts.

3. A series-wound motor has an armature resistance of .5 ohm and a field resistance of .35 ohm. When tested with a Prony brake, it gave a torque of 62 foot-pounds when running at a speed of 950 revolutions per minute, and took 44 amperes at 240 volts. Find (*a*) the efficiency of the motor; (*b*) the armature loss in per cent. of the input; (*c*) the field loss in per cent. of the input; and (*d*) the core loss and friction combined in per cent. of the input.

Ans. (*a*) 79.22%. (*b*) 9.167%. (*c*) 6.42%. (*d*) 5.193%.

4. After the test made in Art. **64** is completed, the tension on the brake thumb-nuts is slackened until the motor takes 24 amperes, the E. M. F. remaining at 230 volts. The pressure on the scale platform is found to be 15.66 lb. The armature resistance is then measured and found to be .4 ohm, and the field resistance 230 ohms. Using only four figures in any of the calculations, etc., calculate (*a*) the speed (assuming it to be proportional to the counter E. M. F., and taking it to the nearest whole revolution only); (*b*) the horsepower output; (*c*) the input in watts; (*d*) the efficiency; (*e*) the per cent. of the input lost in the fields; (*f*) the per cent. of the input lost in the armature; and (*g*) the per cent. of the input lost in the core and in friction combined.

Ans. (*a*) 816 R. P. M. (*b*) 6.083 H. P. (*c*) 5,520 watts. (*d*) 82.156%. (*e*) 4.167%. (*f*) 3.833%. (*g*) 9.844%.

CONSTANT-CURRENT MOTORS.

67. If a series motor be supplied with a constant current, the resulting torque will also be constant. This being the case, if this torque is in excess of that required to overcome the opposition to the motion of the armature, the speed of the motor will increase indefinitely; that is, the motor will run away, until the armature bursts from centrifugal force. The increase in the counter E. M. F. of the machine merely increases the applied E. M. F. in the same proportion, this being automatically regulated by the dynamo.

Motors intended for constant-current circuits must then be provided with some sort of regulator for varying the torque according to the load.

The usual method of regulation is to attach to the motor shaft a device like a centrifugal governor. If the speed of the motor exceeds a certain limit, by reason of the load being thrown off, the weights of the governor move outwards, and this motion is made to decrease the torque of the motor, either by cutting out some of the turns of the field coils or by shifting the brushes around the commutator. The first method reduces the torque by weakening the field; the second causes the torque of a part of the armature winding to oppose that of the rest, so that the resulting torque is diminished.

Constant-current motors are made only in the smaller sizes, and are little used, being generally less satisfactory in their operation than constant-potential machines; they need no further description here.

ALTERNATING-CURRENT MOTORS.

SYNCHRONOUS MOTORS.

68. Single-Phase Synchronous Motors. — If an alternating-current generator has its fields excited from some source of direct current, and a simple, single-phase, alternating current is supplied to the armature, the rapid reversal of the current will produce a torque that as rapidly reverses its direction; consequently, the armature will remain at rest, since the tendency to turn in any one direction is reversed before the armature has time to start.

If, however, the armature is rotated from some external source until its own E. M. F. is not only of the *same frequency*, but opposite *in phase* to the E. M. F. of the source of the alternating current, and is then connected to the alternating-current circuit, the torque will be continuous in one direction, and the armature will continue to rotate, because each time the current reverses its direction in the armature conductors they will have moved into a field of the *opposite* polarity, so that the *reversed* current will give a torque in the *same* direction.

It is necessary that the two E. M. F.'s (that of the circuit and that of the motor armature, i. e., the *counter* E. M. F.) should be in phase, for if that is not the case, the maximum E. M. F. of the circuit will occur at the instant that there is little or no counter E. M. F. to oppose it, so that an excessive current will flow through the armature, which will not produce a corresponding torque, since the reaction of this excessive current will very much weaken the magnetic field of the machine.

In order that the frequency of the counter E. M. F. should be the same as that of the applied E. M. F., it is evident that the motor must be driven at such a speed that the product of the number of revolutions per second and the number of *pairs* of poles of its field-magnets shall equal the frequency desired. (See Art. **27.**)

69. When the counter E. M. F. of the motor is exactly opposite in phase to the applied E. M. F., it is evident that a coil of the motor armature must be in exactly the same position relative to the fields through which it is moving as a coil of the generator is to its fields. On this account these motors are called **synchronous** motors, synchronous meaning "occurring at the same time."

If these two E. M. F.'s are made exactly equal, then no current can flow through the motor armature when they are connected together; but just as soon as the motor armature *slips back* a sufficient fraction of a revolution for its coils to be in a certain position (relative to the fields) *an instant later* than the generator coils, then a current can flow through the motor armature and exert a torque to drive it.

If this torque is sufficient to drive the armature, it does not slip back further; if not sufficient, it slips back a little more until the increased current does furnish torque enough. If the load changes, the armature slips back a little or moves ahead a little, according to whether the load increases or decreases.

The total amount of this slip of the armature at the maximum load does not exceed about a quarter of the width of a

pole-piece, or in a ten-pole machine, about $\frac{1}{80}$ revolution, so that the *revolutions per minute* do not change with changes in the load, if the frequency is kept constant. If the load increases beyond the capacity of the machine, so that more than this amount of slip takes place, the excessive current which flows distorts and weakens the field to such an extent that little or no torque is exerted, and the armature stops.

The action of a synchronous motor may be likened to a pulley (the generator) driving another (the motor) by means of a spring, as represented in Fig. 33, where G represents the driving pulley, M the driven, and S is the spring fixed firmly to the driving pulley and playing between two pins on the driven pulley. If there is no load on the driven pulley, the spring will be nearly straight, as represented by the full lines; but if a load is thrown on the driven pulley, the additional torque required will bend the spring, as represented by the dotted lines, so that the driven pulley *slips back* a little, with reference to the driving pulley, although the number of revolutions per minute of each remains the same.

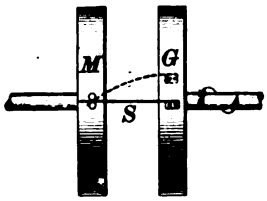

FIG. 33.

If the torque becomes excessive so that the spring is bent beyond its elastic limit, it breaks, and the driven pulley stops.

When supplied from a circuit of a constant frequency, there is then only one speed at which the motor can run, and there is no method of regulating the speed, except by varying the frequency of the applied E. M. F., which is not practicable. If the field is weakened, more current is required to give the same torque, but the speed remains the same; if the applied E. M. F. is decreased (without changing the frequency), the armature must *slip back* a little more to allow the same current to pass through the armature, but the speed remains the same.

70. If a single-phase generator is used as a motor, it will not be self-starting. Single-phase synchronous motors are manufactured by the Fort Wayne Electric Works, which are self-starting, with or without load. One of these machines is illustrated in Fig. 34, and a brief description will serve to explain the principle employed in starting.

The general appearance of the machine can be seen from Fig. 34, which is quite similar in appearance to a multipolar direct-current machine.

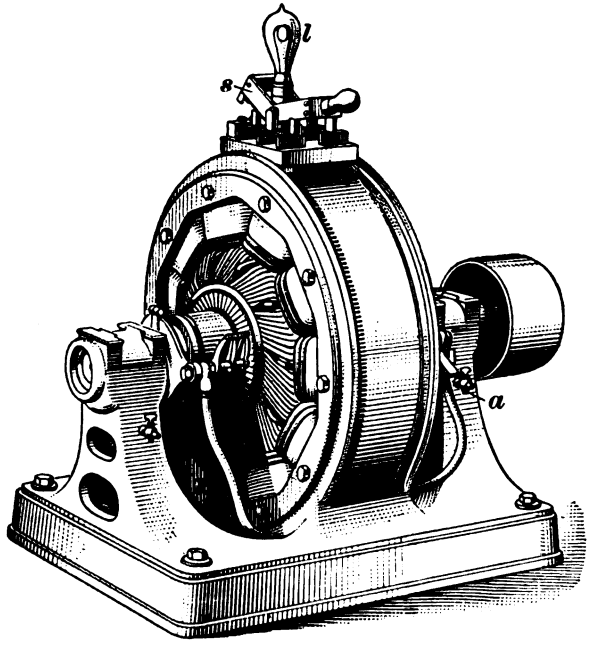

FIG. 34.

The laminated field in the machine illustrated has ten poles. These are provided with two windings. One of these is composed of a few turns per pole of comparatively heavy wire, and another of a large number of turns of light wire. The former is used in starting and the latter serves to supply the field excitation after the machine has been brought to speed.

The armature is provided with two windings, one an ordinary distributed winding connected to the commutator shown at the left end of the machine, and the other a shuttle winding, concentrating a number of distinct and regularly alternating poles around the armature. The two ends of this latter winding are connected to two collector rings at the pulley end of the machine. Bearing on these rings are two brushes, one of which can be seen at *a*.

The operation of the machine can be summed up as follows: In starting, the heavy field winding and distributed armature winding are connected in series. These connections to the circuit are made by means of the special knife switch mounted on top of the machine. Its starting position is that shown in the figure. The alternating current reverses its direction in the armature and field simultaneously, producing a torque in one direction. This brings the machine rapidly up to synchronous speed, which is indicated by the illumination of a lamp *l* connected to the shuttle winding on the armature. When this speed has been reached, the handle of the switch is lifted and the shuttle armature winding thereby directly connected to the alternating supply circuit. The field requiring direct current receives its excitation from the fine wire winding, which is, by means of the switch, connected to the distributed armature wind ing through the brushes and commutator shown at the left end of the machine.

71. Polyphase Synchronous Motors. — Synchronous motors for polyphase circuits are similar in construction to polyphase generators. With regard to their construction, these machines can be divided into two general classes: (1) those with internally revolving fields; (2) those with internally revolving armatures.

Machines of the first class are those used for such purposes as driving arc-light dynamos, frequency changes, etc. The external stationary member is made of laminated soft-iron disks, with inwardly projecting radial teeth. The

winding is similar to that of the stationary member of a polyphase induction motor, as will soon be described. The effect of the polyphase currents (either two or three phase) is to cause a rotating magnetic field.

In starting, a current is induced in the internal field, which has radial poles. When the machine is working at synchronous speed, the internal field is energized by a continuous current, and the motor is now capable of furnishing power. Fig. 35 shows a three-phase machine with stationary armature and internally revolving field. The field is supplied with its exciting current by the two collector rings shown. Such a machine could be operated either as a three-phase generator or a three-phase synchronous motor.

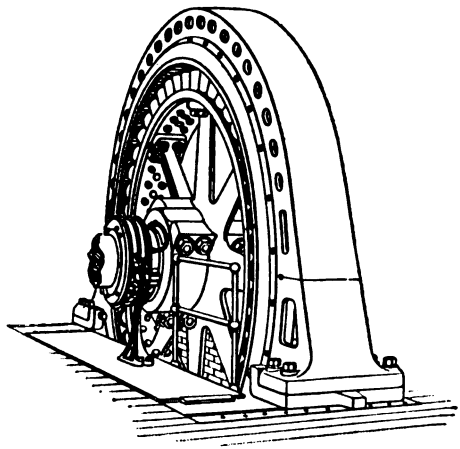

FIG. 35.

Machines belonging to the second class, as divided above, are used principally as rotary converters. Here the winding on the armature causes a rotating magnetic field in that member. The reaction between its field and that caused by the current induced in the stationary winding is sufficient to start the machines.

Several other methods of starting polyphase synchronous motors can be employed. The first of these necessitates the use of a polyphase induction motor, belted to the shaft of the synchronous motor. It will be seen farther on that induction motors are self-starting, and a machine of this type and of small capacity can be used for the purpose mentioned. When the synchronous motor is running at full speed, it is synchronized with the supply circuit as any

alternator would be, and the belt from the induction motor is then thrown off.

Another method of starting a synchronous motor, which is employed only in case the motor forms part of a rotary transformer, involves the employment of the direct-current side of the machine. The latter winding enables the machine to be run as a direct-current motor, enabling the alternating side to be synchronized with the supply circuit, as before. From the foregoing it will be seen that polyphase synchronous motors are not to be used where machines requiring a large starting torque are required. Their essential quality of operating at absolutely constant speed (supposing the frequency of the supply circuit to be constant) makes their use in many cases indispensable.

INDUCTION MOTORS.

72. Single-Phase Motors.—The lack of the power of self-starting under load in synchronous motors led to the development of a type of motor known under the above head. Induction motors, in the same way as synchronous motors, can be divided into two general classes: (1) single-phase, and (2) polyphase.

The operation of an induction motor, whether single or polyphase, rests essentially on the existence or assumption of a rotating magnetic field.

Until a few years ago, a single-phase, self-starting induction motor was practically unknown in commercial work.

In discussing induction motors, some writers employ the terms *field* and *armature* in the same relation to the supply circuit that exists in a direct-current machine. To avoid confusion, however, we shall refer to the *armature* as the *revolving* member and the *field* as the *stationary* member, irrespective of line connections.

73. The field of a single-phase induction motor is wound exactly the same, in principle, as that of a direct-current machine. The field core, as well as the armature core, is

laminated instead of being solid, and is so made to reduce loss from hysteresis and eddy currents.

The armature of a single-phase induction motor is, in most cases, the same as that employed in polyphase induction motors. By referring to Fig. 36, an idea of its construction can be obtained. There is a laminated core provided with a number of slots. In these slots are placed copper bars *b*, *b*, *b*, insulated from the core by means of insulating

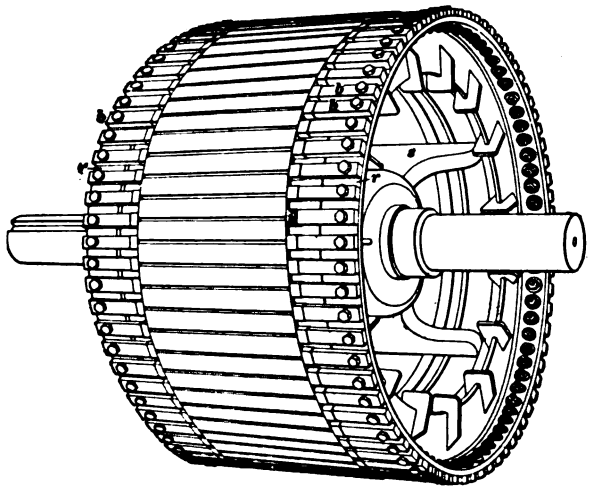

FIG. 36.

troughs *i*. The ends of the copper bars are connected together by means of the copper rings *r*, *r*. The whole construction resembles a squirrel cage, and this form of winding is therefore known as the *squirrel-cage winding*. The alternating magnetism in the field sets up current in the armature, and the reaction between the two causes a repulsion. This does not evince itself as useful torque, as the forces are balanced. If, however, the armature is given a start (by hand) *in either direction*, it will increase in speed till such a speed is reached that the slip is just sufficient to allow the proper working current to be induced in the armature. An increase in load will cause the armature to drop slightly in speed.

74. It has been said that a motor with an armature of this type is not self-starting. As far as practical requirements are concerned, a motor of this type would do little towards supplying the demand.

The motor shown in Fig. 37 is one made by the Wagner Electric Manufacturing Company, and has the property of self-starting. The field is of the usual type, described as follows: The armature is provided with a distributed winding. In

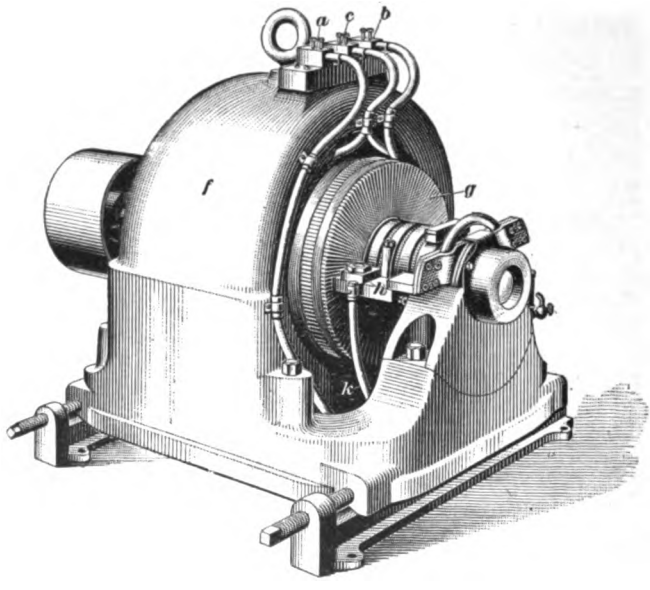

FIG. 37.

starting, the field is connected to the supply circuit, and the induced currents in the armature, instead of being allowed to circulate at will, as in the squirrel-cage type, are controlled by means of short-circuited brushes, one of which can be seen at *h*, Fig. 37. The reaction between armature and field causes a repulsion as before, one component of which acts tangentially on the armature, causing it to revolve with considerable torque. When the proper speed has been reached, a pair of centrifugal weights concentric with the shaft lift the brushes from the commutator and

introduce at the same time a copper ring into the center of the commutator, completely short-circuiting the latter. By this means the armature winding is converted into one of the squirrel-cage type, and the machine, therefore, continues to operate. This machine can be made to start with even more than full-load torque by cutting out part of the field winding. This is done by connecting the line-wires to binding-posts *a* and *c*, in place of *a* and *b*.

The direction of rotation in a Wagner single-phase induction motor can be changed by shifting the brushes a slight amount forwards or backwards.

POLYPHASE INDUCTION MOTORS.

75. In a great many cases it is necessary to have an alternating-current motor which will not only start up of its own accord, but one which will start with a strong torque. This is a necessity in all cases where the motor has to start up under load. It is also necessary that the motor be such that it may be started and stopped frequently, and in general be used in the same way as a direct-current motor. These requirements are fulfilled by *polyphase induction motors*, which have come largely into use, especially in sizes up to about 100 or 150 H. P.

76. Polyphase induction motors are usually made for operation on two or three phase circuits, although they are sometimes operated on single-phase circuits, as explained later. They always consist of two essential parts, namely, the *primary*, or field, to which the line is connected, and the *secondary*, or armature, in which currents are induced by the action of the primary. Either of these parts may be the revolving member, but we will suppose in the following that the field is stationary and the armature revolving. In a synchronous motor or direct-current motor, the current is led into the armature from the line, and these currents reacting upon a fixed field provided by the stationary field-magnet produce the motion. In the induction motor, however, two or more currents differing in phase are led into

the field, thus producing a magnetic field which is constantly changing and which *induces* currents in the coils of the armature in the same way that currents are induced in the secondary coils of transformers. These induced currents react on the field and produce the motion of the armature. It is on account of this action that these machines are called induction motors.

FIELD WINDING.

77. The winding on the field of an induction motor is almost exactly the same as that on the armature of a syn-

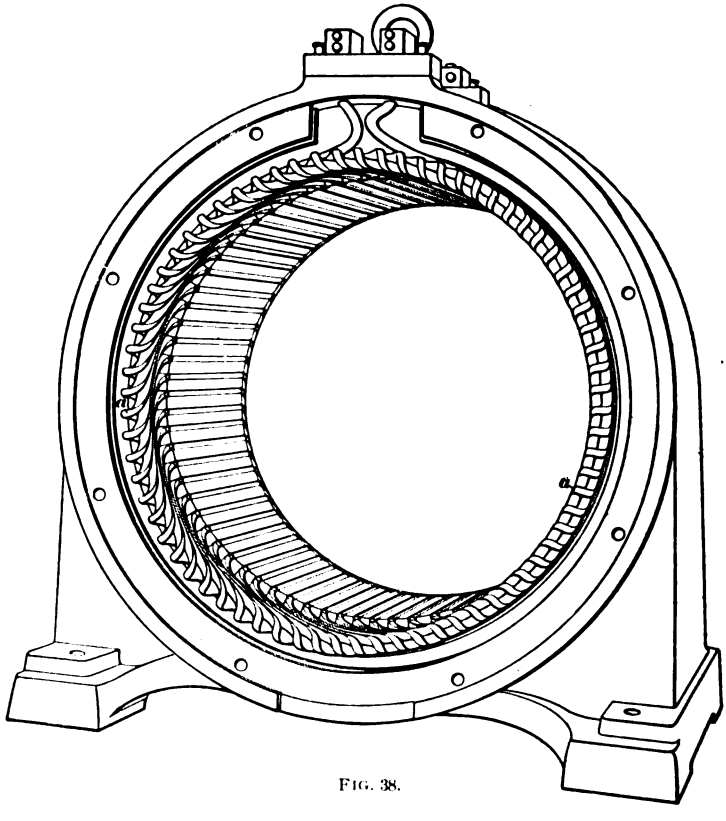

FIG. 38.

chronous motor. The field structure is built up of disks

with teeth on their inner circumference, which form slots when the core is assembled. The coils are placed in these slots, forming a winding like that on the surface of a polyphase armature. Distributed windings are usually employed; that is, there is generally more than one coil per pole per phase, and the winding when completed resembles very much the evenly distributed arrangement of coils on a continuous-current armature. Fig. 38 shows a finished field for an induction motor. The coils are seen at *a*, *a* distributed evenly around the inner circumference.

78. The action of the out-of-phase currents in producing a changing field will be understood by taking the case

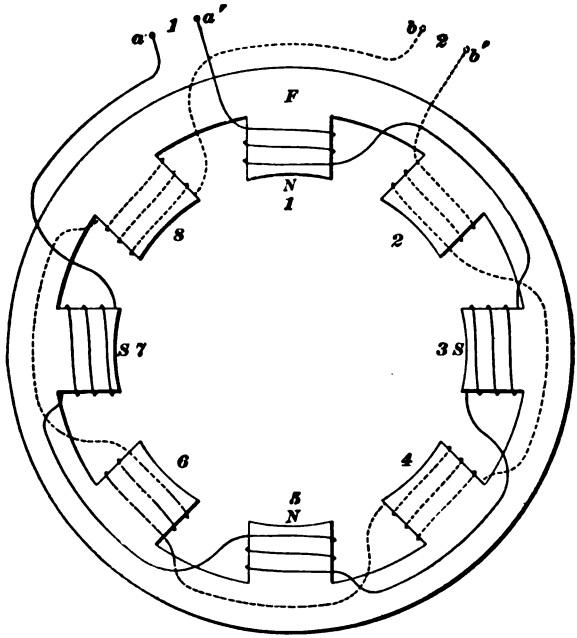

FIG. 39.

of a simple two-phase field, as shown in Fig. 39. In order to make the action clearer, we will suppose that the coils are wound on projecting poles instead of being sunk in slots.

The field F composed of laminations has eight polar projections, four poles for each phase. Each projection is wound with a coil, and alternate coils belong to the same phase, the winding constituting phase *1* being shown full and phase *2* dotted. The winding is such that if a current is sent through either of the windings, the poles formed are alternately north and south; for example, *1*, *3*, *5*, *7* would be N and S, as shown. If such a field were connected to a two-phase alternator, currents would be induced in each of the circuits, differing in phase by 90° and continually reversing in direction. The effect of this is that as the magnetism in, say, pole *1* dies out, it increases in pole *2*, and so on, thus producing the effect of a field continually shifting around or revolving. In fact, the field produced by the field coils shifts around in the same way that the field is made to shift around the armature of the alternator by its rotation in the field produced by the separately excited field-magnets. This gives, then, the effect of a four-pole revolving field; the speed at which it revolves would depend upon the frequency of the alternator. In this case, if the frequency were 60, the field would make $S = \frac{2 \times 60}{4} = 30$ rev. per sec., or 1,800 R. P. M. The effect of the distributed winding in Fig. 38 is more uniform than that in the simple motor shown above, and causes the motor to exert a more even torque.

79. Suppose an armature having also eight polar projections to be placed inside the field of Fig. 39. Each of these projections is wound with a coil c, Fig. 40, and these coils form independent closed circuits, since their two terminals are united at the points d. When a current is sent through the field, a varying magnetic flux is set up through the armature coils, thus generating an E. M. F. in them. Since the coils form closed circuits, the induced E. M. F. causes currents to be set up in them, and this causes the armature to rotate by the reaction of these currents on the field. If the armature were held from turning, the coils on the armature would act like the secondary of an ordinary

transformer, and heavy currents would be set up in them. However, as the armature comes up to speed, the relative motion between the revolving field and armature becomes less, and the induced E. M. F.'s and currents become smaller, because the secondary turns do not cut as many lines of force as before. If the armature were running exactly in synchronism with the field, there would be no cutting of lines whatever, no currents would be induced, and

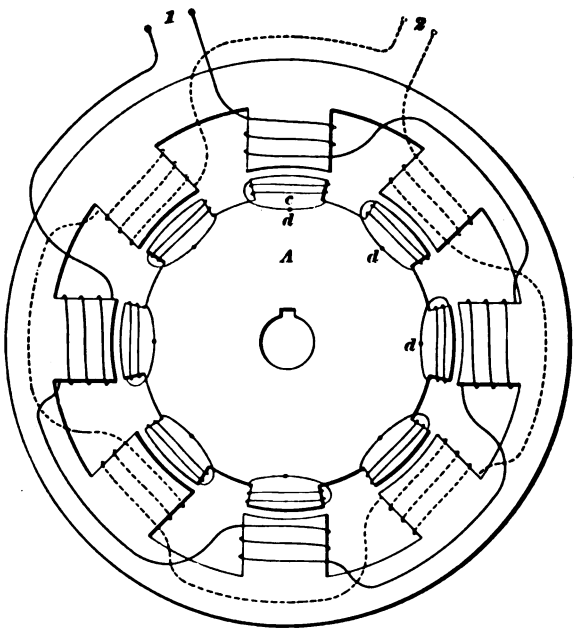

FIG. 40.

the motor would exert no torque. Therefore, in order to have any induced currents, there must be a difference in speed between the armature and the revolving field, and the greater the current and consequent torque or effort, the greater must be this difference. When the load is very light, the motor runs almost exactly in synchronism, but the speed drops off as the load is increased. This difference between the speed of the armature and that of the field for any given

load is called the **slip.** The slip in well-designed motors does not require to be very great, because the armatures are made of such low resistance that a small secondary E. M. F. causes the necessary current to flow. In well-designed machines it varies from 2 to 5% of the synchronous speed, depending upon the size. A 20-H. P. motor at full load might drop about 5% in speed, while a 75-H. P. motor might fall off about 2½%. For example, if an 8-pole motor were supplied with current at a frequency of 60, its field would revolve $\frac{60}{4} = 15$ rev. per sec., or 900 R. P. M., and its no-load speed would be very nearly 900. At full load the slip might be 5%, so that the speed would then be 855 R. P. M. It is thus seen that as far as speed regulation goes, induction motors are fully equal to direct-current shunt machines.

That member of an induction motor to which the working current is led and in which the rotating field is produced is by some writers called the field, irrespective of its use as a stationary or rotating member of the motor. In single-phase induction motors, the field is invariably the stationary member, or, as it is sometimes called, the *stator.* In regard to polyphase induction motors, we have thus far considered only that type in which the rotating field is produced in the stationary member. In another type, in which the armature is wound similarly to that of a polyphase alternator, current is delivered to the winding by means of collector rings. In this type of machine, the relation between the rotating field produced in the armature and the consequent direction of rotation differs somewhat from that in the type heretofore considered, in which the rotating field is produced in the stator. In the second type of machine just mentioned, the rotating member is sometimes referred to as the *field*, for the reason that the rotating field is produced in it. To avoid confusion in the application of the terms *field* and *armature*, it is sometimes well to refer to the rotating member as the *rotor* and the stationary member as the *stator*, as mentioned before. In a polyphase induction motor, the winding in which the rotating field is produced encloses, or is enclosed by, another winding, whose conductors will be

cut by the lines of force of the rotating field, and an E. M. F. will be set up in them, and if their circuit is completed, a current will flow through them. This current will react on the moving field, the tendency of this reaction being *to cause the magnetic field to become stationary with respect to the external conductors.* That is, if the rotating field is produced in the rotor, and the latter is held stationary and the external conductors are free to move, they will revolve in the *same* direction that the field moves; while if, in the same case, the stator is fixed and the rotor is free to move, the armature will rotate in the opposite direction to that in which the field moves.

ARMATURE WINDING.

80. A form of armature winding for polyphase induction motors was described in Art. **73** and illustrated in Fig. 36. In some cases, especially in the larger motors, it is best to have the armature winding so arranged that a resistance may be inserted in series with it while the motor is starting up, and cut out when full speed is attained. If this is not done, there will be a large rush of current at starting, because when the motor is standing still it is in the condition of a transformer with its secondary short-circuited, and since the armature is stationary with regard to the field, a fairly high E. M. F. may be induced, thus causing a very heavy current to flow through the low-resistance secondary winding. This would cause a large current to flow in the primary, and would therefore be objectionable. Moreover, this large secondary current reacts on the field produced by the primary so as to greatly weaken it, and results in a very small starting torque. If the armature were so designed as to have a fairly high resistance in itself, in order to limit the starting current and procure a good starting torque, the motor would be inefficient and would give bad speed regulation. It is therefore best to have a resistance which may be placed temporarily in the circuit and then cut out. This may be done by supplying the secondary with a regular winding similar to that of the field

and bringing the terminals to collector rings. By means of these, connection may be made to a resistance-box, and resistance cut in or out in much the same way as is done in starting up direct-current motors. In the General Electric Company's motors, the use of collector rings is avoided by mounting the resistance on the armature spider, and cutting it out by a switch operated by a sliding collar on the shaft.

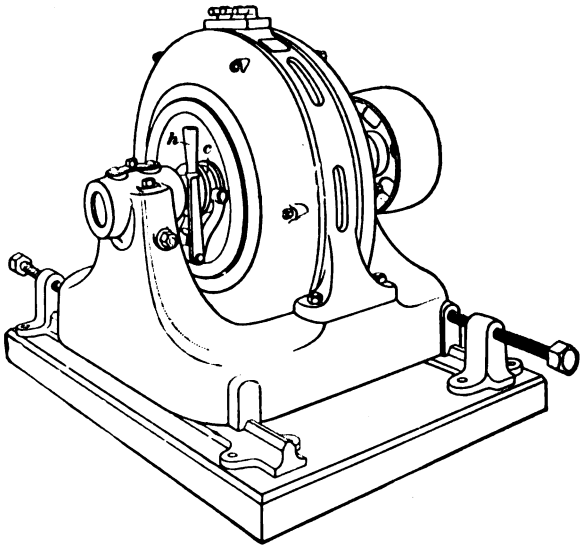

FIG. 41.

This enables the motor to be built without any moving contacts whatever. Fig. 41 shows one of the above motors with adjustable resistance in the secondary, the handle *h* shown in the figure being used to operate the sliding collar *c*. It also shows the arrangement of the parts of a motor with stationary field and revolving armature.

81. In cases where it is necessary to have induction motors run at variable speeds, it is usual to supply them with collector rings connected to an adjustable rheostat, a method often used where such motors are intended for operating hoists, etc.

The direction of rotation of the revolving field produced in a polyphase induction motor can be changed by reversing one of the phase connections.

82. Induction motors are always constructed with a multipolar field, so as to keep down the speed of rotation. The number of poles employed increases with the output, and the speed is correspondingly decreased. The following table gives the relation between poles, output, and speed for some of the standard sizes of induction motors (60 cycle).

Poles.	H. P.	Speed.
4	1	1,800
6	5	1,200
6	10	1,200
8	10	900
8	20	900
10	50	720
12	75	600

PHASE SPLITTING.

83. Motors are sometimes operated from single-phase circuits by splitting the phase; that is, the original single-phase current may be split up into other currents which are out of phase, and thus suitable for starting up a motor. A simple arrangement of this kind is shown in Fig. 42. The motor is supplied with two windings, which are connected to the mains, one in series with a resistance R and the other in series with an inductance L. It is evident that the current in circuit B will lag behind that in A, and the motor will therefore be supplied with two currents suitable for starting. After the motor has run up to speed, R and L are usually cut out and the machine runs as a synchronous motor. A number of starting devices are in use for operating motors from single-phase machines; but where a

really satisfactory motor is required, the multiphase induction or synchronous motors are used. The latter are especially

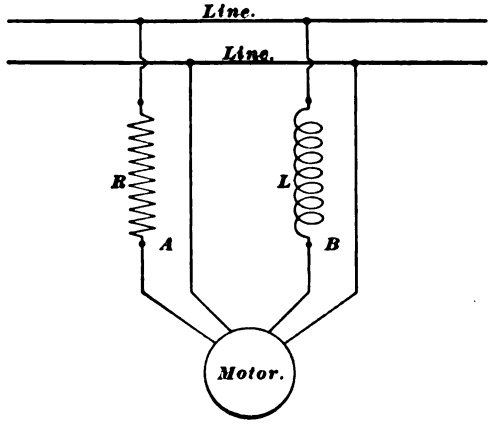

FIG. 42.

valuable for large power-transmission plants, where lagging currents are objectionable.

OUTPUT.

84. The output of an alternating-current motor, in fact of *any* motor, steam, hydraulic, or electric, may be measured by the method given in Art. **62.** As stated in Art. **39,** the ordinary methods of measuring the input to the machine can not be relied upon with alternating currents, so that special methods are required. The efficiency of good alternating-current apparatus is, however, equal to that of similar direct-current machines, and the losses are distributed in about the same proportion.

As no sparking occurs in alternating-current machinery, it obviously does not affect the output. Armature reaction, however, does affect it, as has been pointed out in the case of synchronous motors (Art. **68**). With rotary-field motors, if the load on the machine becomes so great as to

require an excessive torque, the increased current in the armature will at a certain point so weaken the field that it can furnish no increased torque, in which case the machine will stop.

The effect of the heat generated by the current in alternating machines is the same as in direct-current machines, so that the same limitations exist; that is, they should not heat to more than 80° F. above the temperature of the surrounding air.

THE INSTALLATION AND CARE OF DYNAMO-ELECTRIC MACHINERY.

INSTALLING.

85. Dynamo-electric machinery should always be located in a dry place, where the air is cool (see Art. **75**, Part 2), and where it will not be exposed to dust, especially metallic or mineral dust. Moisture will soon injure the insulation, and dust will, if metallic, often cause damage by settling in the winding or in the bearings.

For dynamos or motors up to about 30 H. P. capacity, a good, substantial floor affords a sufficient foundation. Machines of larger size should be provided with brick or stone foundations, of a size and weight depending on the size of the machine. For machines of 100 H. P. or greater capacity, the foundations should not be less than five feet deep.

The machine should be supported on a wooden subbase, resting on the foundation or floor, which should be about 8 inches high. This subbase serves to insulate the frame of the machine from the ground, so the bolts which hold it down to the foundation should be so located as not to touch the bolts which hold the base of the motor down on the subbase. The subbase should not be painted, but should be oiled or filled, to prevent it from absorbing moisture.

If the machine is driven by a belt and the belt passes a part of the frame before reaching the pulley, the static electricity generated in the belt will sometimes pass into the frame of the machine, when it is liable to injure the insulation by *jumping through* it to the winding. A path for this static electricity to escape to the ground may be made by charring with a red-hot iron a fine line on the wooden subbase, extending from one of the bolts which holds the subbase to the foundation to one of the bolts fastening the dynamo base to the subbase. A heavy pencil line drawn with a soft pencil will answer the same purpose. This will not materially affect the insulation of the machine from the ground, but will afford a path for the static electricity to escape.

It is a good plan to place a tin drip pan about 1 inch deep between the base of the machine and the subbase and large enough to catch whatever oil may drip from the bearings, thereby preventing it from soaking into the floor.

86. The foundation should be located with respect to the driving pulley or shaft, so that the length of the belt used should not be too small nor too great. Fifteen to twenty feet between centers is about right, unless the driving pulley is more than about six times the diameter of the driven, in which case longer belts should be used, so as to get sufficient arc of contact on the driven pulley to drive it without making the belt too tight.

Belted machines of the smaller sizes (less than 150 H. P. capacity) are usually provided with a *sliding bed-plate* with guides or rails on which the machine slides, it being moved back or forwards by screws operated by levers or handwheels. (See Figs. 52 and 53, Part 2.) The machine is not, then, bolted directly to the subbase, but may be fastened down on the bed-plate which is bolted to the subbase.

If a new belt is to be used, its length should be calculated for that position of the pulleys when they are *nearest together*. Then, as the belt stretches with use and becomes

slack, the machine may be slid along the guides, and the proper tension of the belt maintained.

The width of belt necessary to transmit the power to or from the machine may be calculated by the rules given in previous articles. It will usually be found that the pulley furnished with the machine is about 1 inch wider than the belt required. For machines of between 10 and 50 H. P. capacity, the belting used should be that known as *light double* or *dynamo* belting, which should be of about ⅔ the width of a single belt to transmit the same power. Dynamo and motor belts should have cemented or riveted joints, to insure smooth running. Laced belts should not be used.

The size of the pulley on the engine or shaft to which the machine (dynamo or motor) is belted may be calculated from the size of the pulley and its number of revolutions, using formula $N = \frac{d\,n}{D}$. To the calculated size of the driver should be added 2%, to allow for the slip of the belt. *The size of the pulley on the machine should not be altered*, except by the advice of the makers or their representatives.

87. In the following articles upon the setting up and the testing of machines, only direct-current constant-potential dynamos will be considered. Other classes of machines will be taken up later. On setting up a new machine, the foundation and subbase should first be prepared, then the bed-plate set in position on the subbase, but not fastened. The machine should then be *very carefully* unpacked and set in position on the sliding base. Small machines, up to 10 or 15 H. P. capacity, are usually packed in a box, with the armature and field coils in position and connections made, so it is only necessary to take them out of the box and set them upon the bed-plate.

Machines from 15 to about 50 H. P. capacity usually have the armature removed and packed separately, the field coils being left on the frame, which is boxed. Still larger machines usually have the armature, field coils, connection

boards, rocker-arm, etc., removed and packed separately, and the frame skidded.

When this is done, the bearings, joints in the magnetic circuit, and similar bright surfaces are slushed with grease or painted with thick white-lead paint; this should be cleaned off, using benzine or kerosene oil for the grease and turpentine for the paint. Joints in the magnetic circuit should be wiped off with a cloth, not with waste, for the latter will catch on the tiny points on the surface of the iron, and will prevent the two surfaces from coming tightly together.

Most machines of the larger sizes are now made multipolar, and the top part of the magnetic circuit may be removed, down to the center line of the shaft, to allow of removing and replacing the armature. Others have the magnetic circuit solid, but the standards are made removable, so that the armature may be slipped out endways. If there is little headroom, it is desirable that the machines have both the upper part of the magnetic circuit and the standards removable, so that the armature needs to be lifted only 2 or 3 inches, instead of more than half its diameter, as would be the case with standards cast solid with the base.

88. After cleaning up the bearings and joints, the lower half of the machine should be set up in position on the bedplate, and the field coils and the pole-pieces (if removable) placed in position, care being taken to get the field coils on in the right *order* and *position*, so that they will connect together properly.

If the bearings are *self-oiling*, the cavity in the standard which contains the oil should be examined to see if all the sand from the mold in which it was cast has been removed. If this has not been done, it should be blown out with a hand bellows, or, better, with a jet of live steam from the boilers, if that is obtainable. The caps for the standards should be examined and cleaned in the same manner. The bearings should then be wiped out, cloth being preferable to waste for this purpose also.

After this has been done, the armature should be looked over to see if the winding and commutator are uninjured, and all dirt or sawdust should be brushed or blown out of the spaces between the coils, etc.: it should then be placed in position in the bearings.

89. As it is very important not to bump the armature against the projecting corners of the machine in putting it in place, it should not be lifted in by "main strength," if so heavy that two men can not handle it readily, but a crane or other hoisting mechanism should be used.

To lift the armature, a rope sling should be used, which should be looped around the ends of the armature shaft, never around the commutator. To this sling, the hook of the tackle, or chain block, may be fastened, and to prevent the sling from bearing against and possibly injuring the armature winding or the commutator, a piece of board, notched at the ends, should be placed between the two parts of the sling.

This is represented in Fig. 43, *B* being the notched piece of board and *S* the sling. The sling should be crossed in the hook, as represented, for otherwise it is very liable to slip and drop the armature.

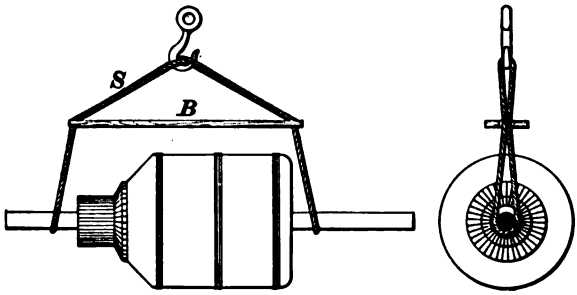

FIG. 43.

A single chain block, or tackle, is not desirable to use in handling a heavy armature, as, either in raising or lowering, the armature must be swung out to one side, which is very inconvenient, and the armature is liable to swing

around unexpectedly and damage itself by bumping against the frame. If an overhead traveler is not at hand to attach the tackle to, two tackles should be used, one hung directly over the center of the machine, and the other directly over the nearest point on the floor to which the armature can be brought.

The armature may then be lifted by this latter tackle until high enough to clear the frame of the machine, when the other tackle may be hooked on, and by slacking off on the one and hauling in on the other, the armature may be lowered directly into place. In this way, two men can easily handle a heavy armature.

The top part of the magnetic circuit or other heavy parts of the machine may be put in place in the same manner.

If the armature winding is on the surface of the core, it should not be rested directly on the floor, but on a pad of waste or rags, or the end of the shaft should be supported on a couple of wooden horses. If the armature is of the "ironclad" type, in which the winding is embedded in slots cut in the periphery of the core, this precaution is not necessary. In either case, the armature should always be *lifted* by means of the shaft.

After placing the top part of the magnetic circuit with its pole-pieces and field cores in position and setting up the bolts or screws which hold it in place, the bearings should be filled with oil and the armature turned over a few times by hand to make sure that it does not touch the pole-pieces at any point and that the shaft runs easily and true; if it binds at any particular point of a revolution, the shaft may have been sprung in transit, and it should not be run in that condition. The armature shaft should have an end play of from $\frac{1}{4}$ to $\frac{1}{2}$ an inch, except in those machines in which the pole-pieces face the end surface of the armature, like the Brush constant-current machine. This end play allows of a slight end motion of the armature as it runs, which makes the wear on the commutator and bearings more uniform, and prevents the shaft from sticking by any slight endwise expansion it may undergo.

TESTING, AND LOCATING AND REMEDYING FAULTS.

90. If everything appears to be all right, the pulley should then be put on and the machine carefully lined up with the shaft and pulley to which it is to be belted, and the bed-plate fastened permanently to the subbase. Then the belt should be put on and the machine run without load and with no field excitation for two or three hours, if possible, to make sure that the bearings and oiling arrangements are in working order.

If the bearings begin to heat badly, the oil in the bearings should be examined to see if it is gritty, and if so, it should be drawn off and fresh oil substituted. *Only the best grades of light mineral oil should be used;* any cheaper oil costs more in the end. If the bearings still heat, they should be taken out and examined for rough spots, and if necessary, scraped.

If taken in time, the corresponding roughness of the journal may be removed in the following manner: Take a piece of crocus cloth of a width equal to the length of the journal, wet it with oil, and wrap it around the journal; then take a turn around the journal with a piece of cloth tape or strip of cloth, take one end of the strip in each hand, and by alternately pulling on each end rotate the piece of crocus cloth around the journal, which will effectually polish it and remove all slightly rough spots. If the shaft has been bruised or dented, the high spots should be carefully brought down with a fine file before polishing with the crocus cloth.

If self-oiling bearings are used, they should be examined to see if the rings turn freely; if they show a tendency to hug the sides of the slots in the bearings, and turn very slowly, or not at all, they should be bent a trifle, so that all parts of the ring do not lie in the same plane, and so that as they turn they will run from side to side of the slots in the bearings. This may usually be done with a pair of heavy pliers or a small wrench, without removing the bearings from the machine. It should be carefully done, and the

"wind" of the ring made uniform, so that it will not catch in the slots at any point.

If a new belt is used and it has been made of the proper length, it will usually be tight enough to cause the bearings to get hot at first, but in half an hour or so it will stretch sufficiently to relieve the pressure, and the bearings should cool off. Large belts that are made endless by the manufacturers are usually stretched by them, in which case they should be put on without quite as much tension as an unstretched belt. (See Art. **86.**)

91. If the machine runs all right, it should then be prepared for a run under load. Before stopping the machine, the commutator should be examined for high or low bars or rough spots, by touching it lightly with the finger nail or the end of a lead-pencil all along its length, as it turns, which will show if the above defects exist. Rough spots can be removed with sandpaper (*never* emery-paper or cloth) folded around a bit of board and pressed evenly on the commutator as it turns. High or low bars, or "flats," can only be removed by turning the commutator down to a uniform diameter, using for this purpose a sharp **V**-pointed tool, a fine feed, and a high speed, finishing with fine (0 or 00) sandpaper or a smooth file.

After the commutator has been turned up, it should be carefully gone over to see that the tool has not left chips that have become embedded in the insulation between the bars. If any such exist, they should be carefully picked out and all copper dust wiped or blown off the commutator and armature.

The yoke and brush holders should then be placed in position, and the brushes, if not of the radial type, carefully adjusted, so that they bear on the commutator the proper distance apart. This may be done by counting the commutator segments, and dividing their number by the number of poles, the result being the number of segments which should lie between the tips of successive sets of brushes. Some multipolar machines use only two sets of brushes, but

the fraction of the circumference of the commutator that separates the two is indicated by the rocker-arm.

It is often convenient to make marks by means of a prick punch on the end of the commutator shell, which will indicate the segments on which the various sets of brushes would rest when the proper distance apart. These reference marks will serve to relocate the brushes at any time.

The brushes should bear evenly on the commutator throughout their whole end surface. Metallic brushes are usually flexible enough to take care of this point, but carbon brushes should be fitted to the commutator surface. This may readily be done by putting them in position in the brush holders, and dragging a sheet of medium-fine sandpaper back and forth between the brushes and the commutator, keeping the paper side of the sandpaper down on the commutator; this will grind the ends of the brushes down to the same curve as that of the commutator.

The tension used on the brushes should be uniform—light with metallic and heavier with carbon brushes.

Machines which are shipped with the connections broken are usually accompanied with a diagram showing the proper method of connecting them up; if this is not the case, some one perfectly familiar with the apparatus should make the connections. In any case, the connections should be carefully looked over to see if they are all right, and all screws, binding-posts, and other connections fastened firmly.

92. The machine should then be run up to its proper speed, the brushes placed in the approximate neutral position, the shunt-field circuit closed, and the resistance gradually cut out. If everything is all right, the machine will build up to its proper voltage (see Art. **37**, Part 2); but if this does not occur, the trouble may be looked for as follows: Attach a voltmeter to the brushes, with the field circuit *open;* the voltmeter should show a slight deflection, due to the E. M. F. generated by the residual magnetism. Then close the field circuit, and if the voltmeter needle goes back towards zero, it shows that the *current sent around*

the field coils by the E. M. F. due to the residual magnetism tends to magnetize the fields in the opposite direction, so that the few lines of force of the residual magnetism are opposed and destroyed, and the machine can not build up.

If this seems to be the case, rock the brushes ahead or back until any one set occupies the position formerly occupied by its neighbor. Then close the field circuit again, and if this is the only trouble, the machine will build up. If it does, and this position of the brushes is inconvenient for any reason, they may be put back in their former position and the connections of the shunt fields reversed.

If the machine still does not build up, it may be due to the absence of any residual magnetism, in which case the current from a few cells of battery or another dynamo sent through the coils will establish a sufficient amount to enable the machine to build up. The presence (or absence) of residual magnetism may be shown by a voltmeter, as described above.

If this is not the trouble, the field circuit may be broken somewhere. Examination of the connections between the various coils will show if they are defective or loose; quite frequently the wire in the leads from the spools becomes broken at the point where they leave the spool, while the insulation remains intact, so that the break does not show. This may be readily detected by "wiggling" the leads.

If the break is inside the winding of one of the coils, it can only be detected by testing out each coil separately to see if its circuit is complete. This may be done with a Wheatstone bridge (Art. **53**, Part 1) or with a few cells of battery and a galvanometer. A low-reading Weston voltmeter makes a good galvanometer to use for this purpose.

If the current from another dynamo can be obtained, the faulty spool may be detected by connecting the terminals of the field circuit to the terminals of the circuit of the other machine; no current will flow through if the circuit is broken, but if a voltmeter is connected across each single field coil in succession, it will show *no deflection* if the coil is continuous, because both poles of the voltmeter will be

connected to the *same* side of the dynamo circuit. If the coil has a break in it, one of its terminals will be connected to one side of the circuit and the other to the other side, so that a voltmeter connected between these terminals would show the full E. M. F. of that circuit. Consequently, when the voltmeter is connected across a spool and shows a considerable deflection, that spool has an open circuit which must be repaired before the dynamo can operate.

93. This method of testing is represented by the diagram, Fig. 44; *1*, *2*, *3*, and *4* represent the field coils of a 4-pole dynamo, there being a break in coil *2* at *B*. The terminals *a* and *c* of the field winding are connected to the + and − terminals of a "live" circuit; that is, a circuit connected to a dynamo in operation. It will be seen that terminals *a* and *b* of coil *1* are both connected to the + side of the circuit, and as there is no current flowing through the field circuit, there is no difference of potential between *a* and *b*; therefore a voltmeter connected to *a* and *b*, as at *V*, will show no deflection. But terminal *c* of coil *2* is connected to the − side of circuit, so a voltmeter connected to *b* and *c*, as at V_1, will show a deflection, and in fact will indicate the difference of potential between *a* and *c*.

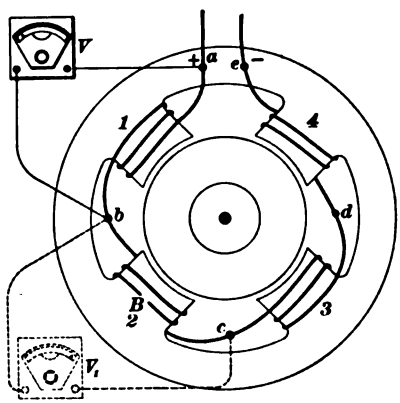

FIG. 44.

The above test may be roughly made with a bit of wire long enough to span from terminal to terminal of a coil. If one end of the wire is touched on *a*, for instance, and the other on *b*, it will not affect the circuit any; but if touched on the terminals of the coil in which the break is located, the field circuit will be completed through the bit of wire, and a spark will occur when the wire is taken away. The

wire should not be allowed to span more than one coil at a time, otherwise it may short-circuit so much of the field winding that too great a current would flow.

94. If the machine builds up to about half its normal voltage or less, and refuses to come up higher when all the external resistance is cut out of the field circuit, the trouble may be due to too low speed, which may be easily tested by counting the number of revolutions made by the machine. If this is not the fault, the brushes should be rocked back and forth, and if the voltage increases with a motion of the brushes in either direction, this motion should be continued until the voltage will not increase further, in which case the brushes are probably in the proper neutral plane.

If the voltage is still considerably too low, it is probable that one of the field coils is wrongly connected, so that the fields are not all of the proper polarity. This can be tested with a small compass, and if one field is found to be of the wrong polarity, the connection of its coil should be reversed, in which case the machine will probably build up properly, unless there is some serious defect in its construction.

When the machine has built up to its proper voltage, and the brushes have been adjusted to the non-sparking position, the armature should be examined for *short circuits*. These occur when the ends of one of the coils form accidental contact with each other, or when two neighboring wires touch each other; the effect in either case is to form a closed circuit of one or more active conductors, which circuit, being of low resistance, has an excessive current generated in it, causing it to heat badly, and finally destroying its insulation.

This fault may be detected by holding a nail, screw-driver, or other small piece of iron over the surface of the armature between the poles. The fluctuations in the current flowing in the short-circuited coil, as it passes from one pole to another, set up corresponding fluctuations in the stray field between the pole-pieces, so that the piece of iron held in this stray field will be vibrated quite strongly. Care

should be taken not to allow the bit of iron to be pulled into the armature by the attraction, as that would probably destroy the winding.

95. Armatures in which the winding is embedded in slots cut in the periphery of the core will sometimes cause a piece of iron held between the poles to vibrate, especially if the slots are comparatively few in number; but this action can be readily distinguished from that due to a short-circuited coil, as the vibrations due to the teeth on the armature occur several times in a revolution, while those due to the short-circuited coil occur only once in a revolution. The difference in the rate of the vibration may be easily distinguished.

If a short-circuited coil appears to exist, the machine should be run for some time (with no external load), perhaps ten minutes, and then shut down. By feeling all the armature coils in succession on the back end of the armature, the defective coil may be readily picked out by its being much hotter than the others. It should then be marked in some way and the armature taken out and the coil rewound or the short circuit otherwise removed.

96. If the armature shows no short circuit, it should be run under load for some time before being put regularly in commission. It is usually not desirable to connect it for this test to the circuit which it is to supply with current, since the load can not be readily controlled. It is better to provide an artificial load for the machine which may be readily controlled, so that any desired load may be obtained.

With small machines of the proper voltage, this artificial load may be made by using a **lamp bank**; that is, a number of incandescent lamps arranged so that few or many may be connected in circuit by manipulating the necessary switches.

With larger machines, especially of the higher voltages (230 or 500 volts), this method is not so convenient as a **water**

rheostat, which consists of a wooden tank filled with salted water, in which are hung two iron (or other metal) plates, that are attached to the terminals of the dynamo. The circuit is thus completed through the water between the plates, and by varying the distance between the plates, the resistance of the external circuit can be adjusted between wide limits.

An old oil barrel makes a good tank if the dynamo to be tested has an output of not more than about 15 kilowatts. If a greater amount of energy must be disposed of, the surface and the amount of the water must be greater than a barrel will afford, and a tank should be made for the purpose, especially if several machines are to be tested. Fig. 45 illustrates a form of water rheostat, in which T is the

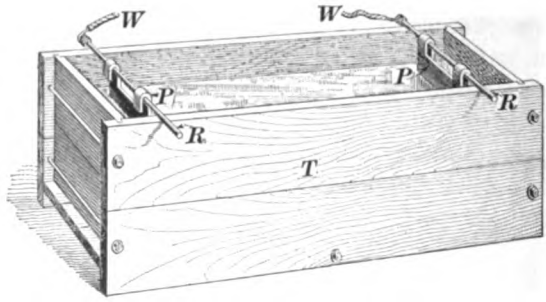

FIG. 45.

wooden tank, which should be about 7 feet long and about $2\frac{1}{2}$ feet square, inside measurements, made of $1\frac{1}{2}$-inch or 2-inch pine plank, with tongued-and-grooved joints, which should be leaded to make them tight, the whole being held together by cross-bolts, as represented in the figure.

Two iron rods R, R are placed across the top of the tank, and to them the terminals of the dynamo circuit are attached, as represented at W, W. From these rods two iron plates P, P are hung, which should have about $3\frac{1}{2}$ or 4 square feet of surface (on one side) below the water-level. These plates may be made of a couple of pieces of old boiler-plate or heavy ($\frac{1}{4}$-inch or thicker) sheet iron, cut with two

projecting lugs on the top, which are bent into hooks by which the plates are hung from the rods *R*, *R*. Cast iron will do equally well; two old ash-pit doors, for example, will make very good plates, the rods being passed through the holes for the hinge pins.

When ready for use, the tank should be filled with water, and from 5 to 20 pounds of rock salt or washing-soda added to reduce the resistance to the required figure, as water alone would give altogether too high a resistance. The resistance should be made such that when the two plates are at opposite ends of the tank, about $\frac{1}{10}$ the normal current of the generator will flow when the circuit is closed. An ammeter should be connected in circuit with the rheostat, of a capacity sufficient to measure the full-load current of the machine.

When all preparations are completed, connections firmly made, and the plates at opposite ends of the tank, the external circuit should be closed and the plates moved closer together, until the current is about one-quarter the full-load current of the machine. The machine should then be examined for further faults, which will generally be indicated by sparking at the brushes.

97. If the brushes spark badly, they should be shifted backwards and forwards a little, and the position of least sparking found. If they are too far back, the spark will occur at the forward tips of the brushes, and will generally, especially with copper brushes, be short, bluish in color, and confined to one or two points along the row of brushes in each set. If too far forwards, the spark will appear to come from *under* the brush, will generally be more yellowish in color, and will occur all along the rows of brushes.

Even when in the best position, the sparking will not entirely disappear, for by looking carefully under the brushes, a tiny twinkling spark will be seen, which, however, does no damage.

If there is an intermittent sharp flash at the brushes, occurring at each brush once in a revolution, it is probably

due to an *open circuit* in the armature winding, which usually occurs in the leads from the armature coils to the commutator segments. The break may be located by running the armature and allowing it to flash for half a minute or so, when it will be found that one, perhaps two, commutator bars are noticeably burned, the burn extending from the *forward* edge of the bar (in the direction of rotation) back half its width or more. The armature head should then be removed and the lead from the winding to the burned bar examined.

If the lead is only disconnected from the bar by having become unsoldered or by the wire slipping out from under the screw which holds it, the fault may be quickly repaired. If it is necessary to resolder the connection, care should be taken that particles of the solder do not fall on the back of the commutator in such a way as to connect two bars or two leads together, or to connect a commutator bar with the shell. *Acid should not be used* in soldering these connections, since the acid will corrode the joint and finally cause a break; the surfaces should be scraped bright and resin used as a flux. Resin dissolved in alcohol makes a very convenient flux for this kind of work.

If the break is such that it can not be readily repaired, and there is not time to put in a new connecting wire, the machine may be temporarily used by connecting the burned bar with either of the adjacent bars by a drop of solder, or by hammering lightly on the *end* of the bars until the space between the two is bridged over by the soft metal. *This should never be done* if possible to repair the broken connection, but will sometimes be necessary in case of an emergency. When the break is repaired, which should be as soon as possible, the connection between the bars must be removed.

When the break is in the connection between the winding and the commutator bars, the continuity of the winding is not usually disturbed, since the leads to the commutator do not usually form a part of the winding. In case the break is in the coil itself, the expedient described above can not be used without affecting the capacity of the machine, and the

break must be located and repaired, which will usually require the rewinding of the broken coil.

A high bar or a "flat," and sometimes a *badly* short-circuited coil, will cause a flashing similar to that due to an open circuit, but these should have been looked for and remedied before, as described in Arts. **91** and **94.** If none of the above troubles develop, the load on the machine should be gradually increased by moving the plates of the water rheostat closer together, until the current is as great as the rated capacity of the machine will allow.

98. If the dynamo is compound wound, the voltmeter should be watched as the load is increased, to see if the compounding is of the correct amount. If the voltage falls off rapidly as the load is increased, the series coils are probably connected wrongly, and their connection should be reversed, when the voltage should remain constant or slightly increase as the load increases, without changing the resistance in the shunt-field circuit.

The brushes should be carefully shifted as the load increases, if necessary to prevent sparking, and the position of the brushes at the different loads noted. If the machine is to be used under a suddenly variable load, the shifting of the brushes should be slight, and in fact there should be a position of the brushes where the sparking will be nothing at medium loads, and not serious at either full load or no load, and they should be kept in this position at all times.

99. In multipolar machines with as many brushes as there are poles, the sparking between one pair of brushes may become violent as the load increases, while the others run quietly. This may be due to a wrong adjustment of the brushes, which may be readily detected and remedied; but if this is not the trouble, the series coil (in compound-wound machines) of that pole-piece between the two sets of brushes may be short-circuited or wrongly connected. This may be detected by trying the strength of that pole-piece

relative to one of the others, by noting the pull required to detach a screw-driver or other bit of iron from similar points on the two pole-pieces. If the series coil is defective, there will be a noticeable difference in the pull of the two pole-pieces, that on which the defective coil is wound being much weaker than the other.

If the series coil is connected wrongly, the error can be readily rectified, and a further test will show if this is the fault. If the coil has some of its turns short-circuited, it is difficult to locate the fault except by unwinding and rewinding the coil, which should only be done by representatives of the company furnishing the machine or by their direction.

If one of the shunt coils is affected in the same way, that is, wrongly connected or partially short-circuited, the trouble will manifest itself before the load is put on. (See Art. **94.**) If one of the coils is partially or wholly short-circuited, the field current will be greater than the normal, which will cause the *good* coils to heat excessively, while the defective coil remains cool.

While running under full load, the bearings and belt should be watched; if the bearings have a tendency to heat excessively, the belt should be slacked off, if possible. If the belt squeaks loudly in passing over the pulley, it is too slack, and if it can not be tightened without causing the bearings to heat excessively, a wider belt should be substituted, unless the heating is due to dirty oil or rough spots in the bearings. These last causes will usually show up in the first part of the run, however, when the machine is not loaded.

100. After the machine has thoroughly warmed up, it should be tested for "grounds," or connections between the winding and the frame or armature core. This may best be done with a good high-resistance voltmeter, such as a Weston, as follows: While the machine is running, connect one terminal of the voltmeter to one terminal of the dynamo, and the other terminal of the voltmeter

to the frame of the machine, as represented in Fig. 46, where T and T_1 are the terminals of the dynamo, and V and V_1 two positions of the voltmeter, connected as described above.

If, in either position, the voltmeter is deflected, it indicates that the field winding is grounded somewhere near the *other* terminal of the dynamo; that is, if the voltmeter at V shows a deflection, the machine is grounded near the terminal T_1, and *vice versa*. If the needle shows a deflection

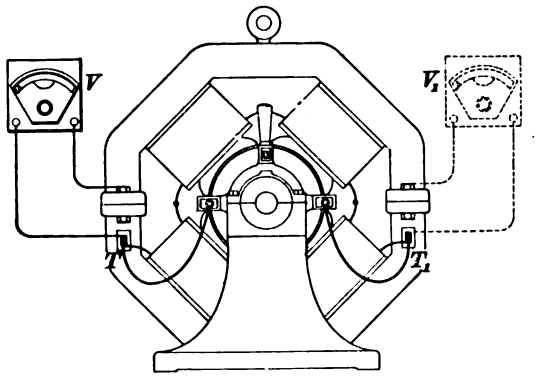

FIG. 46.

in *both* positions, but seems to vibrate or tremble, the armature or commutator is probably grounded. If, in either case, the deflection does not amount to more than about $\frac{1}{20}$ the total E.M.F. of the machine, the ground is not serious; but if the deflection is much more than this, the windings should be examined separately, the ground located, and if possible, removed.

101. To locate the ground, if thought to be in the field coils, each should be disconnected from its neighbor (with the machine shut down, of course) and "tested out" by connecting one terminal of another dynamo (or of a "live" circuit) to the frame of the machine, care being taken to make a good contact with some bright surface, such as the

end of the shaft or a bolt-head, and the other to a terminal of the coil to be tested, through a voltmeter, as represented in Fig. 47.

Here C and C_1 represent the terminals of a "live" circuit, which should have a difference of potential between them about equal to the E. M. F. of the machine when it is in operation, but also not greater than the capacity of the voltmeter will allow of measuring. T and T_1 represent the terminals of the dynamo, as before, and t and t_1, the terminals of the field coils, which have been disconnected from each other and from the dynamo terminals. One terminal C of the circuit is connected to the frame of the machine; the other terminal C_1 of the circuit is connected through the voltmeter V to the terminal t_1 of the field coil. If that coil is grounded, the voltmeter will show a deflection about equal to the E. M. F. of the circuit $C\,C_1$, but if the insulation is intact, it will show little or no deflection. The wire connecting the voltmeter with the terminal t_1 may be connected in succession to the terminal of the other coil, or coils, and to the commutator; any grounded coil of the field or armature winding will be shown up by a considerable deflection of the voltmeter needle.

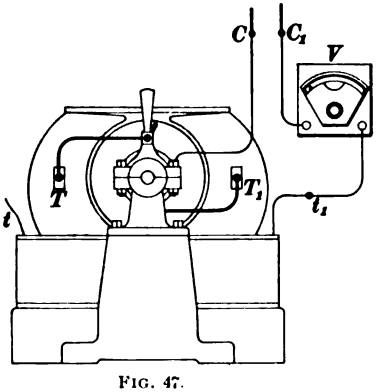

FIG. 47.

102. If the machine tests out clear of grounds, it should be shut down after the proper length of time and the various parts of the machine felt over to locate any excessive heating. If accurate results are wanted, thermometers should be used, by placing the bulb on the various parts (armature, field coils, etc.) and covering with a wad of waste or rags. They should be looked at from time to time, until it is seen that the mercury no longer rises, when the point to which it

has risen should be noted. A thermometer nung on the wall of the room will give the temperature of the air, and the difference between the air temperature and that of the various parts of the machine should not exceed the prescribed limit. (See Art. **75**, Part 2.)

When the dynamo has been found or made to be in good condition, it may be connected to the circuit which it is to supply and put in commission. The oil used in the bearings during the preliminary runs should be drawn off and a fresh lot substituted. All connection to the dynamo and to the switchboard terminals should be made firm and tight; surfaces in contact should be made bright and clean before fastening together.

DIRECT-CURRENT MOTORS.

103. In setting up direct-current motors, the same remarks apply that have been made concerning the location and assembling of dynamos. After having set up the motor and made the necessary connections to the circuit which is to supply it with power, it should be tested and run without its load, to develop any faults which may exist.

After making sure that the connections are such that when the main switch is closed or the arm of the starting box turned on to the first contact, the field circuit is closed *separately* and *before* the armature circuit (if it is a shunt motor), the current should be turned on to the field circuit, and the pole-pieces tested for magnetism with a bit of iron (a screw-driver or a nail). If they are not magnetized, and the circuit to which they are connected is *surely* "alive" (which may be tested with a voltmeter, lamps, or, if the E. M. F. of the circuit is not more than 125 volts, by lightly touching the terminals of the circuit with the thumb and finger of one hand), the field circuit is probably open, and the break should be located by the methods described in Arts. **92** and **93.** It is sometimes the case that in the style of starting box in which the movement of the contact arm first closes the field circuit and then the armature

circuit, that a particle of dirt will prevent the field-circuit contact from being made.

If the fields show that they are magnetized, then polarity should be tested with a compass, and if any one is wrong, its field coil should be reversed. When the fields are found to be of the proper polarity (with respect to each other), the armature circuit should be completed through the resistance or starting box, with the belt or other connection to the load removed, if possible.

If the motor refuses to start when the current is turned on, it should at once be examined to see if this is due to the shaft sticking in the bearings or to some similar cause which binds the armature fast. If this is not the case and the armature turns freely by hand, the armature circuit may be open in the armature, in the connections, or in the starting box. If the current is actually passing through the armature, which can be shown by lifting the brushes on one side, a slight spark showing the presence of the current, the brushes may be in the wrong position. They should be shifted backwards or forwards, when the motor will start if this is the trouble. If the fields are not magnetized, the motor will not start, except with an excessive current; this point, however, should have been previously looked into.

If the motor starts off all right, the armature should then be examined for short circuits, open circuits, defective commutator, etc., in the same manner as has been described for dynamos, and these faults, if they exist, remedied. When this has been done, the load should be put on the machine, and its performance carefully watched for an hour or so, to see that no defects develop themselves.

If the installation is large enough to warrant it, the temperature should be taken at the end of the run, providing the conditions are such that the motor has been subjected to as much load during the run as it is liable to get. If this is not the case, it is often desirable to make a test of its efficiency and behavior (as to sparking, etc.) under full load, using for the load a Prony brake, as described in Art. **63.**

CARE OF DIRECT-CURRENT MACHINERY.

104. The most essential feature in caring for dynamo machinery is **cleanliness.** The machine should be kept thoroughly cleaned, and oil should never be allowed to accumulate on either the armature or the field windings, as it will gradually affect the insulation.

Whenever the commutator is polished off with sandpaper, the fine copper dust should be wiped or blown off from the machine, especially from any part of the winding.

The commutator should *not* be kept bright; it is in its best condition when covered with a brownish glaze. This condition can be arrived at by carefully turning up the commutator, adjusting the brushes until there is little or no sparking, and then wiping the commutator off at frequent intervals with a cloth just moistened with oil or vaseline. Waste should not be used for wiping off the commutator, as its threads are liable to become caught in the brushes. A soft pine stick makes a very good burnisher for a commutator.

A convenient tool for wiping off the commutator may be made from a strip of heavy canvas, 3 or 4 inches wide and perhaps 18 inches long. Spread a thin layer of vaseline over one side of the cloth, roll it up like a jelly cake, and fasten the end by sewing or wrapping the roll with string. The end of this roll applied to the commutator will wipe it off and grease it to just about the right extent, and as the end becomes frayed or dirty, it can be trimmed off.

Too much oil or grease will cause the brushes to flash, long yellow sparks being thrown out from under the brush; at each point where a spark appears, a black ring will form around the commutator, which should be wiped off.

105. Carbon brushes should not be used on machines of over 10 or 15 H. P. capacity if of low voltage, i. e., 125 volts or less, as their high resistance will cause heating, owing to the large currents required. In any case they should be carefully fitted to the commutator and examined from time to time to see that the bearing surface (of the brush on the commutator) is as great as the size of the

brush will permit. When taken out after running for some time, the end of the brush should look smooth and glossy; if rather rough, grayish in color, and gritty to the touch, the carbon is "hard," and should be discarded.

It often improves a carbon brush to heat it to redness and plunge it in lubricating oil. This practice is to be recommended, as there will then be no liability of getting too much oil on the commutator, and enforced inattention will not be the cause of a poor commutator.

Metallic brushes are made of strips of copper, bundles of copper wires, or, more frequently, copper gauze folded into shape and stitched. Those made of strips or wires are very liable to have the edges or ends of the laminæ fused together by sparking, forming hard points that cut the commutator. Whenever this occurs, they should be taken out and the ends trimmed off. To get them to the proper bevel, so that they will rest evenly on the commutator at the proper angle, it is customary to use a "filing jig," which consists of a block of steel with a hole through it the size of the brush, and with one end beveled off to the proper angle and hardened. The brush is placed in the jig with the end projecting a little from the beveled face, and clamped in position by a thumb-screw. The end of the brush may then be filed or ground down flush with the face of the jig, thus giving it the correct bevel.

Metallic brushes should not be allowed to become filled with oil or dirt; if they get in this condition they may be readily cleaned with benzine or kerosene. If a commutator becomes very dirty, it may be cleaned in the same way, when the machine is not running.

This is preferable to sandpapering, so long as the commutator is smooth and round; sandpapering should only be resorted to when the commutator is rough, and not even then if there is a high bar or "flat," for in that case the only remedy is turning down the commutator. (See Art. **91.**)

106. If short circuits or open circuits develop in the armature winding after the machine is in operation, they

may be detected and remedied in the manner described in Arts. **94, 97,** and the following:

In dynamos, a break in the (shunt) field circuit will simply cause the dynamo to cease generating, and the break may be found as previously described. In shunt motors, however, a break in the field circuit will cause an excessive current to flow through the armature, and if the motor is not loaded, it will speed up excessively.

If the motor circuit is properly protected by fuses (Art. **60**), this excessive current will probably do no further damage than to blow the fuses. If not so protected, the armature will be overheated and the insulation damaged or destroyed. The break in the field circuit may be found as previously described. (Art. **93.**)

The overheating of the insulation of an armature or field coil may be readily detected by the smell.

If the coil is new and is not much overheated, the smell will be that of hot shellac; but if old, or if the coil is much overheated so as to char the insulation, the smell is very peculiar, and once experienced will not be forgotten. It is something like the smell of a strong solution of soot in rain-water. It is usually present to some extent in machines which have been running a long time, especially if their normal working temperature is high. Whenever this peculiar smell becomes apparent, the electrical machinery should *at once* be examined for some overheated part, which may be a field coil, the armature winding as a whole, or a short-circuited coil in the armature.

When the insulation of any part of a dynamo or motor has become badly charred, the part is said to be *burned out.* A burn-out requires that the part affected be replaced. A short-circuited armature coil will usually burn out in a very short time if not attended to (see Art. **95**). With short-circuited field coils, it is the *good* coil that burns out (see Art. **99**), so that in case a burn-out of one of the field coils occurs before the trouble is located, the other coils should be examined for the cause of the trouble.

REPAIRS.

107. In case of accident to parts of the machinery, it is sometimes very convenient to make repairs on the spot, saving the time lost in sending the injured apparatus to the makers.

Shunt field coils, especially of the smaller sizes, may be readily rewound in a lathe. In rewinding such a coil, the damaged wire and insulating material should be carefully removed, noticing while so doing just how they are disposed in the coil, the thickness and character of the insulating material at different points, especially on the heads and barrel of the spool, and the manner in which the leads or terminals of the coil are attached to the winding and brought out.

The size of the wire and character of its insulation (i. e., whether single or double, covered with cotton or silk) should also be carefully noted.

When rewinding the coil, all these features of the old coil should be duplicated. The number of turns of wire in the new coil should be as nearly as possible the same as in the old; this may be arrived at nearly enough by weighing the old coil before stripping off the winding, and bringing the new coil up to the same weight.

If necessary to make a joint in the wire, the ends of the wires should be rubbed bright with fine sandpaper, twisted firmly together, and soldered with a hot iron, using *only* resin as a flux. Only solder enough should be left on the joint to make the connection between the wires solid. The joint should then be covered with extra insulation, such as silk, cotton, or adhesive tape. All projecting ends of wire or drops of solder must be removed from the joint, or they will pierce the insulation and make contact with neighboring wires.

108. Armature coils require more care and experience in rewinding, so that their repair should not be attempted except in the case of the very simple forms of ring armatures, when a coil may be removed and

replaced without disturbing in the least the other coils or connections.

If it is decided to rewind a damaged coil, the binding wires should first be removed by filing them through at some point where the winding will not be injured. The number, size, and material of the wires in each band, and the character and thickness of the insulation used between the bands and the winding should be carefully noted.

The damaged coil should then be carefully disconnected from the others and removed, noting the exact number and arrangement of the turns in the coil, the thickness, character, and location of whatever insulation is used, and the method of bringing out the leads of the coil and connecting them to the commutator or the rest of the winding. The length of the piece of wire removed should be measured, and a new piece, a little longer than the old, cut for the new coil, of the same size wire and the same kind of insulation.

The new piece of wire should be carefully wound in place of the old coil, duplicating it in every feature, taking great pains not to kink the wire or bruise its insulation in the operation. It may be necessary for an inexperienced hand to make two or three trials before the coil is successfully rewound.

When complete, the binding wires should be replaced and the coil tested for grounds by the method illustrated in Art. **101**, before connecting it to the commutator. If free from grounds, it should be connected up, the heads on the armature replaced, and the armature put in its frame and tested for short circuits.

In replacing binding wires, they should be subjected to a considerable tension, so that when they expand as the armature heats up, they will not become loose. They should be soldered together quickly with a very hot iron, using again only resin as a flux.

109. Many makers balance their armatures by means of small masses of solder secured to the binding wires. If these binding wires are replaced, the armature must be

rebalanced in order that it may run without excessive vibration.

For this purpose, two iron or steel ways should be provided from ¼ to ⅜ inch wide on the upper edge and 12 to 18 inches long, depending upon the weight and size of the armature to be balanced. These ways should be true and straight, set up level, and at such a distance apart that the journals of the armature shaft will rest upon them.

To balance the armature, it should be placed upon the ways, when it will turn over until the heavy side is beneath. A small weight (a piece of solder, for instance) should then be temporarily fixed to the upper part of the armature, which should then be just started in motion by the hand. It will then settle in some new position, when another weight should be temporarily placed on the armature, or a little of the other weight removed, according to the judgment of the workman. This operation should be continued until the armature shows no decided tendency to remain in any one position, when the weights may be permanently fastened in place.

The method of repairing broken leads, connections, and the like may be readily seen from the nature of the fault. In any kind of a repair, the object in view should be to replace the defective part, so that it will be exactly as it was before being damaged.

CONSTANT-CURRENT DYNAMOS.

110. All the preceding remarks concerning constant-potential dynamos (except those concerning shunt field coils) apply equally well to constant-current dynamos of the closed-coil armature type, and they should be installed and cared for in the same manner, and are subject to the same faults and injuries. In addition, whatever controlling apparatus is used should be kept in good working order and well oiled, especially when first started. The moving parts should not be allowed to get gummed up with oil and dust and should move freely without sticking.

Machines of the open-coil type, of which there are but few makes, usually require special precautions in setting the brushes, adjusting the controlling apparatus, etc., and their manufacturers supply pamphlets in which these and directions for otherwise adjusting and operating the machines are clearly set forth.

Open-coil machines, when running normally, always show a bluish spark from ¼ to ½ inch long; but the commutators are so designed that this spark does no harm, and in fact is an indication that the machine is running properly. Any fault in the machine is usually indicated by some change in the character of the spark.

ALTERNATORS.

111. Alternators require no special directions for setting up, other than those given for constant-potential machines. The way in which the exciter (see Art. **29**) is to be set up will be evident from the construction of the machine.

Alternators should be given a trial run, without load, to make sure that the bearings are in good condition and to locate short circuits and open circuits in the windings. Short circuits manifest themselves just as they do in direct-current machinery, and may be similarly located (Art. **94**). If the armature is open-circuited, it will simply refuse to show any E. M. F. Some alternators have the armature divided into two parallel circuits, and an open circuit in one of these will not affect the E. M. F. at no load. When the load is put on, however, the open circuit will be indicated by excessive heating of the armature, excessive drop in the voltage, and generally by a fluctuation in the stray field similar to that produced by a short circuit.

An open circuit in the field winding may be easily detected, since the machines are separately excited. The exciter being a constant-potential direct-current machine, its faults or troubles may be detected as already described.

In setting the brushes, those on the collector rings require

no particular adjustment, except to see that they bear evenly and firmly on the surface of the rings.

The brushes on the commutator should be set opposite one another, and at such a point that the insulation between two segments is under a brush at the moment that the armature coils are in the position of least action (see Art. **29**). It should be remembered that in the *drum*-wound alternators, or those in which the coils are wound around teeth, the position of least action occurs when the coil or tooth is wholly under *one* pole-piece. See also Arts. **17** and **30**. When running under load, these brushes may need a slight adjustment forwards or back, as indicated by the sparking.

The operation of multiphase machines does not differ from that of ordinary alternators. On account of the simplicity of the winding and connections, alternators are, as a rule, less subject to electrical troubles than are direct-current machines; but as the voltage used is usually high, any accident which does occur is generally quite disastrous. For the same reason, cleanliness is a most important feature in the care of alternating-current machinery, and oil from the bearings must be rigidly excluded from the armature and field windings.

ALTERNATING-CURRENT MOTORS.

112. Synchronous motors are used only in the larger sizes, whose installation and preliminary operation are in the hands of experienced men who thoroughly understand the special features of starting and operating this class of machinery, and who make sure that these features are understood by the persons who are to have the machinery in charge. The rotary-field motors, however, are being installed in all sizes and places, but they require no special directions for operation, being usually even simpler than a direct-current motor.

The device for cutting out the starting resistance (see Art. **80**) should work freely and make good and firm

contact. If at any time the motor should become overloaded and stop, the current should be at once cut off and the machine turned over by hand with the load removed as far as possible, to see if the overload was due to excessive friction of the bearings; if this is the case, the trouble may be remedied as already described.

If found to be in the machinery the motor is driving, a part of the load should be removed and the machine started again.

If the current is left on the machine after it has stopped from overload, the field coils will become overheated and will eventually burn out.

ELECTRICAL MACHINERY IN GENERAL.

113. As before remarked, cleanliness is the essential feature in operating electrical machinery successfully, and care in this respect will usually prevent the development of serious trouble. Most of these troubles manifest themselves by excessive heating of one or more parts of the machine; so if at any time more than the normal amount of heating is noticed in any part of the machine, it should be at once examined, as already described, to discover the source and nature of the fault.

Noise is usually another indication that all is not working well, and all rattling, pounding, or squeaking should be investigated and the fault corrected, if possible. Carbon brushes which bear radially upon the commutator are the source of much noise, but with a glazed, smooth commutator and well-fitting brushes, this need not occur. A newly turned commutator will cause the brushes to "sing," as it is never exactly true, owing to the "jumping" of the tool in passing from segment to segment in turning it down.

To prevent unpleasant and even dangerous shocks, all electrical apparatus in operation should be handled with *one hand* only; that is, only one part of the machine should be touched at a time, and then only when the surrounding

floor and the shoes of the operator are dry or a dry piece of board is used to stand upon.

The shock of any circuit of less than 500 volts E. M. F. is not dangerous of itself to a person in good health, but may often cause one to lose his balance and fall upon or into moving machinery, and cause serious injury. The voltage of most alternators and the larger constant-current machines is high enough to give a fatal shock in most instances. If necessary to expose one's self to the liability of receiving such a shock, a pair of rubber gloves worn on the hands will afford protection; but even then care should be exercised in handling the wires or in touching "live" parts of the circuit.

NOTE.—In case a person has been exposed to a shock so violent as to cause insensibility, he should be treated as if drowned; that is, his breathing should be kept up artificially, by alternately pulling and releasing the tongue and raising and depressing the arms, with slow, rhythmical motions, until a physician can take charge of the case.

All permanent connections around a machine should be kept firmly fastened, as a loose connection will frequently be the cause of much more serious trouble. Whenever convenient, these connections should be soldered, and large wires and cables should be provided with brass or other metal tips or terminals, with which the necessary connection may be made.

It is not possible to lay down a set of rules by which all the troubles with dynamo-electric machinery that may occur may be located and obviated, but from those given, and from a knowledge of the principles under which these machines operate, most of the difficulties ordinarily met with may be overcome if *good judgment* and *common sense* are also used.

SWITCHBOARDS.

114. The switchboard is a necessary part of every plant. Its object is to group together at some one convenient and accessible point the necessary apparatus for controlling the dynamos and distributing the current to the various circuits, and the safety devices for properly protecting

the lines and machinery. The number and kind of these appliances depend upon the character and size of the plant.

There are four general types of switchboards in use, as follows:

1. Switchboards for arc-lighting circuits using constant currents.

2. Switchboards for incandescent-lighting circuits using direct currents at a constant potential.

3. Switchboards for incandescent-lighting circuits using alternating currents at a constant potential.

4. Switchboards for electric railroads using (ordinarily) direct currents at a constant potential.

Switchboards of all kinds are frequently made of wood, but this is not desirable on account of the danger from fire. The least dangerous type of wood switchboard is the skeleton type, which is merely an open framework of hardwood beams or joists, with its members so spaced as to properly support the instruments on the board. When properly built, this form of board is safer than any other wooden board, and in many places is the only type of wooden board allowed by the fire underwriters.

Switchboards of slate, marble, or soapstone are coming into more extensive use on account of their safety and appearance. These are made up in panels or slabs of convenient size, and from $\frac{3}{4}$ inch to 2 inches thick, according to circumstances. Being in themselves insulating material, the switches, etc., are usually mounted directly on the face of the board.

When all the wiring and connections are upon the face of the board, it may be mounted directly on the wall of the room; but if the wiring is all on the back of the board, as is the general custom, it should be placed at least 2 feet from any wall, so as to give a space for examining and making alterations in the wiring. A clear space of at least 2 feet should also be left between the bottom of the board and the floor.

SWITCHBOARDS FOR ARC-LIGHTING CIRCUITS.

115. This type of board is one of the simplest. Arc-lighting plants usually consist of several dynamos, of which any one must be capable of being switched into any one of several circuits. This may be accomplished in a variety of ways, but there are two in general use.

In the first method, the terminals of the various dynamos are led to a row of contacts on the bottom of the board. The terminals of the various circuits are led to a similar row (or rows) higher up on the board, and connection between the various members of the two rows is made with flexible insulated cables, provided with tips which are so arranged that the connection may be readily made.

To facilitate changing over from one circuit to another, the contacts are usually made double, so that two cables may

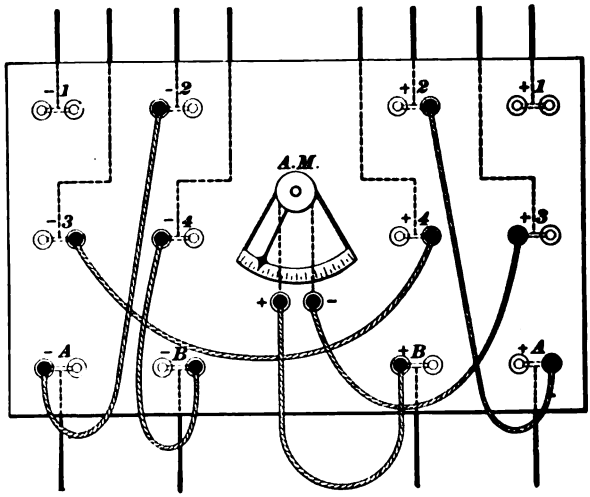

FIG. 48.

be connected to the same point if desired. The form of the contact varies with the different manufacturers, but is usually of the plug type; that is, the tip on the cable is in the form of a cylindrical brass plug, provided with a wooden or rubber handle, and the contact on the board is a short brass

tube into which the plug fits. This tube is generally split to insure firm contact, and often a spring latch is added to hold the plug in place when inserted.

Fig. 48 represents one form of this sort of board, arranged for two dynamos and four circuits. Each terminal is double, and those for the dynamos are arranged in the lower row, and marked $+A$, $-A$, $+B$, and $-B$, each dynamo being distinguished by its letter (A or B). The terminals of the four circuits are arranged in two rows at the top of the board, and are marked $+1$, -1, $+2$, -2, $+3$, -3, $+4$, and -4, each circuit being distinguished by its number (1, 2, 3, or 4). The ammeter *A. M.* is mounted in the center of the board and provided with terminals (marked + and −) to enable it to be connected into any circuit, to determine if the current of that circuit is of normal strength. In this figure, the circuits are connected up as follows: Circuit *1* is "dead"; circuit *2* is on dynamo A, and circuits *3* and *4* are in series with each other, and are on dynamo B. The ammeter is also in this circuit.

116. The necessity for the two contacts at each terminal is obvious when it is considered that the external circuit of a constant-current dynamo should never be opened while the machine is running, because that would be equivalent to increasing the resistance of the external circuit, which would cause the E. M. F. to rise so suddenly as to endanger the insulation, besides making a long and vicious arc at the switchboard. It is often necessary to cut in or out circuits, machines, or the ammeter without stopping the plant, and, as stated above, without opening the circuit; with the two contacts at each terminal, and by the use of a sufficient number of connecting cables, these various changes in the connections may be easily made.

For example, suppose it is desired to connect the ammeter (in the foregoing figure) into No. *2* circuit. To disconnect it from circuits *3* and *4*, a cable is plugged in between the vacant contact at $+B$ and that at $+3$; this short-circuits the ammeter, which may then be disconnected from

terminals $+B$ and $+3$, and connected to terminals $+A$ and $+2$. Then, on removing the cable directly connecting $+A$ and $+2$, the ammeter is in No. 2 circuit.

Again, suppose it is desired to connect No. 1 circuit in series with No. 2, without shutting down either the dynamo or No. 2 circuit. The first step would be to connect terminal $+1$ with terminal $+2$, then terminal $+A$ with terminal $+1$. These two make the same connection as the cable directly connecting terminal $+A$ and terminal $+2$, and this latter may be removed without affecting the circuits any. Terminals -1 and $+2$ are now connected together, and the connection between terminals $+1$ and $+2$ removed, throwing the two circuits (Nos. 1 and 2) in series.

An examination of the board and a little practice in "plugging in" circuits when the dynamos are not running, will soon enable the operator to make any desired combination at will.

117. In the second method, the cables hanging across the front of the board are done away with, connection being made by means of plugs. This is accomplished by means of two groups of contacts, arranged in two parallel planes a little distance apart. The contacts in one group are divided into pairs of horizontal rows, each pair being connected to the terminals of one of the dynamos; the contacts of the other group are divided into pairs of vertical rows, each pair being connected to one of the circuits. The contacts are directly opposite each other, and the connection between any dynamo contact and any circuit contact is made by a long brass plug, which is pushed through the outside contact to the inside.

Fig. 49 is a diagram showing the connections of this form of board arranged for four dynamos and four circuits. The contacts in the front board are connected to the dynamo terminals, and those on the back board to the circuit terminals, as described above. It will be seen that owing to the way the connections are arranged, any dynamo may be connected to any circuit by simply pushing a plug (P, P, etc.)

through the contacts connected to the dynamo that correspond in position to those of the circuit it is desired to connect.

The back or *circuit* board is provided with an extra row of contacts at the bottom, by which circuits may be connected in series, using for the purpose cables with suitable terminals, similar to those used for connections in the first form of board described. One of these cables (called a *jumper*) is shown in the figure at *J*. In the diagram, circuit No. *4* is represented as being connected to dynamo *B*, and circuits Nos. *2* and *3* are in series and connected to dynamo *A*. Circuit No. *1* is "dead."

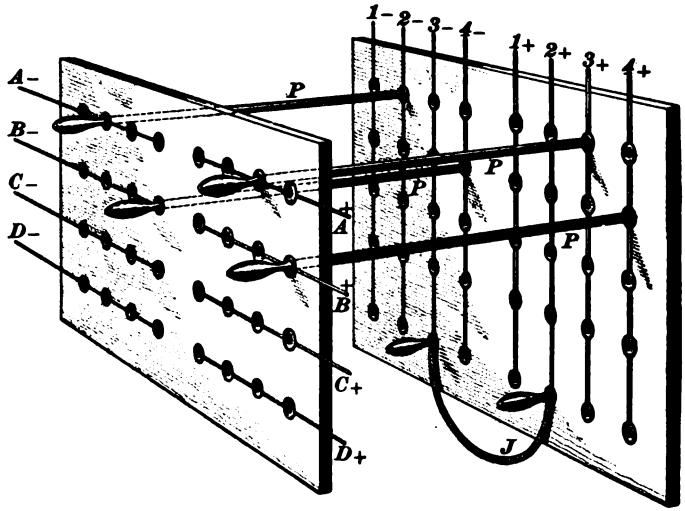

FIG. 49.

The method of connecting from one circuit to another, etc., will be evident from an inspection of the diagram, Fig. 49.

118. As constant-current dynamos are self-regulating, there is no liability of an excessive current flowing through any circuit, so that there is no need of safety devices to prevent the damage which such excessive current might do. The considerable length of overhead wire which is used for

arc-light circuits is exposed to the high potentials of lightning discharges, which are liable to puncture the insulation of the dynamo windings in the effort to get to the ground. To prevent this from occurring, apparatus called **lightning-arresters** are used.

The simplest form of lightning-arrester consists of a spark gap, or narrow space between the edges of two notched carbon or metal plates, one of which is connected to the line, the other to the ground. When the line becomes charged with atmospheric electricity (lightning) which is of the nature of static electricity, and therefore of very high potential, it is discharged by the lightning jumping across this narrow gap and passing into the earth. With this form of arrester, however, the dynamo current can follow the arc of the lightning discharge, and if the line happens to be grounded elsewhere, the current will flow through the circuit thus formed, which now presents a comparatively low resistance, and the arc will burn and destroy the arrester.

To prevent this, many forms of lightning-arresters have been constructed, in which the two plates between which the arc may form are suddenly moved apart whenever such an event takes place, thus rupturing the arc. Most of these are quite complicated, and are seldom sure to act; the *Thomson* arrester, however, performs the same office without moving parts, by taking advantage of the mutual reaction between a current and a magnetic field.

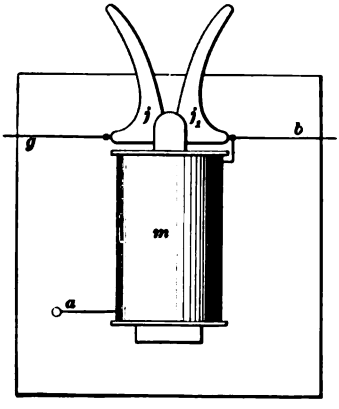

FIG. 50.

This arrester is illustrated in Fig. 50. The spark gap across which the lightning charge jumps exists between the two curved jaws j and j_1, jaw j being connected to the ground at g, and jaw j_1 being connected to the line at b. The gap between these jaws is not uniform in width; the

lightning discharge jumps across at the point where the jaws are nearest, and this point is situated between the poles of an electromagnet *m*, which is in series with the main or dynamo circuit, which is connected at *a*. Any current which passes across the gap between the jaws *j* and j_1 is therefore in the field of this magnet, whose polarity is so chosen that the reaction of the current on the field repels the current out towards the tips of the jaws, thus making its path so long that it can not follow it, and the arc is therefore "blown out," or ruptured.

119. The windings of the electromagnet serve another very important purpose. Without them, the lightning charge would have no particular preference for the spark gap of the arrester over the gap (insulation) between the winding and the frame of the dynamo, but as these magnets have considerable self-induction, the sudden rush of the lightning charge is prevented from passing through the magnet coils, and is therefore forced to pass across the spark gap in the arrester.

All good lightning-arresters should have a **choking coil,** as a coil is called which is inserted in a circuit merely for the effect of its self-induction or the obstruction it offers to rapidly changing currents. It should be remembered that the best arresters are useless unless their connection with the ground is carefully and thoroughly made and unless they are carefully installed.

The usual location for lightning-arresters is at the point where the circuits enter the station, one arrester being placed in each side of each circuit. A common ground-connection will do for the entire bank of connectors, if the number does not exceed ten. This ground-connection should be of two or three strands of No. 6 or No. 8 (B. & S. gauge) wire, run with as few bends and turns as possible to a thorough ground-connection, which should be either a large plate of copper buried in an excavation which has been carried down to *moist* earth and surrounded with coke or charcoal, or a piece of 1 or 1½ inch iron pipe at least

10 feet long, driven its full length into the ground, and provided with a brass plug in the top, to which the ground wire is attached. A supplementary connection may be made with a system of water-piping, if desired.

120. In using arc (constant-current) switchboards, it should be remembered that it is dangerous to break the circuit of a dynamo, while it is safe to short-circuit one. Breaking the circuit is liable, from the sudden rise in the potential, to puncture the insulation where it is weakest, on the line or in the machine, causing a ground. (See Art. **116.**)

Lines should be tested daily, when not in operation, for open circuits and grounds. A rough way of making such a test is by means of a magneto (Art. **32,** Part 2), which will show the presence of either an open circuit or a ground, but will not locate them from the station. Some manufacturers of arc-lighting apparatus furnish with their switchboards appliances for locating the position of a ground with considerable precision, which greatly facilitates its removal.

SWITCHBOARDS FOR DIRECT-CURRENT INCANDESCENT-LIGHTING CIRCUITS.

121. Incandescent lamps are usually operated in parallel, at a constant potential. When direct currents are used, the potential on a single circuit is seldom greater than 125 volts, and as each 16-candle-power lamp takes nearly .5 ampere at this voltage, the volume of current is considerable if a large number of lamps is operated. Consequently, the fittings, switches, and appliances on an incandescent-circuit switchboard are of more massive construction than those for arc-light circuits.

Direct current for incandescent lighting is distributed according to one of two general systems—the **two-wire** and the **three-wire systems.**

In the two-wire system, all the lamps are connected in parallel on a single circuit or set of circuits, there being but

two wires to each circuit, the wire which carries the current to the lamps being considered positive, and marked + in Fig. 51, and the wire carrying the current from the lamps back to the dynamo, which is called the negative, and is indicated by the sign —. The two-wire system is represented in Fig. 51, where *d* represents the dynamo which

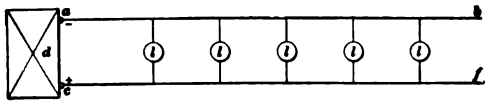

FIG. 51.

supplies the current to the lamps *l*, *l*, *l*, etc., by means of the two mains *a b* and *c f*. It will be seen that in this system each lamp or other device using the current is independent of the others, and may be turned off or on without affecting them. The current may be supplied from one dynamo or from several connected in parallel.

In the three-wire system, illustrated in Fig. 52, two dynamos *d* and d_1 are necessary.

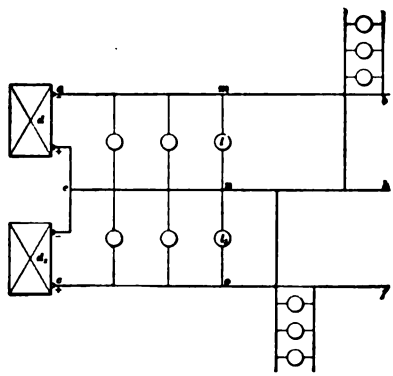

FIG. 52.

These are connected in series, as represented, and a main *a b* led out from the — terminal of one machine, and another *c f* from the + terminal of the other machine. A third main *e h* is led out from the junction of the two machines, and it is between this main, called the *neutral* main, and either of the other two that the lamps or groups of lamps are connected in parallel, as shown.

If the number of lamps connected between the neutral wire and either the + or the — main is the same, no current will flow from the dynamo through the neutral wire, since the current which flows through the lamps on one side is just that necessary for the lamps on the other, and it will

flow through them; but if a few more lamps are connected in on one side than on the other, then the *excess* of current required for the greater number of lamps over that required for the lesser will flow through the neutral wire.

If the lamps are so grouped that there will always be about the same number burning on each side of the neutral wire, only a small current will flow through it, and it may, therefore, be of much smaller wire than the + and − mains, although it is usually made the same size. The three-wire system requires at least two dynamos, although any number of pairs of machines may be used.

The exact arrangement of switchboards for incandescent-lighting circuits varies with the skill or judgment of the designer and the requirements of each case.

In general, however, the same apparatus is used in all boards, with about the same general arrangement, and a description of these general features will answer for almost all switchboards for either the two or three wire method of distribution.

122. Regulating Devices.—These consist chiefly of rheostats, or resistance-boxes, one being included in the shunt field circuit of each dynamo. The construction varies largely, the most usual, perhaps, being a box containing coils of German-silver or tinned-iron wire, which are connected at various points to contact segments, over which a traveling contact arm moves and cuts in or out the resistance as desired. (See Art. **51**, Part 1.) This arm may be operated by a knob or hand-wheel, suitably connected to the contact arm.

The rheostat is usually located on the lower part of the switchboard, so that the operating handle is about 3½ feet from the floor. It may be mounted wholly on the front of the board, but unless of extremely neat and compact appearance, it is usually better to mount it on the back of the board, the hand-wheel projecting through the board so it may be operated from the front. In some cases, the contact segments and contact arm are mounted directly on the front

of the board, connection to the resistance coils being made from the back.

It is usual to provide the resistance-box with an "open-circuit" point, so that after the contact arm has been so moved that all the resistance is in circuit, further movement breaks the circuit, thus shutting down the dynamo.

123. Switches.—Switches for incandescent work are usually of the *jack-knife* type, illustrated in Fig. 53. In this form of switch, the circuit is made or broken by means of a copper contact blade *k*, which fits between the flexible copper tongues of two contacts, as *c* and *d* or *a* and *b*. These are shown in perspective at *r*. Each contact blade is fitted to a lever *l*, l_1, pivoted at one end at *p*, p_1, and provided at the other with a handle *h* by which it may operated. These

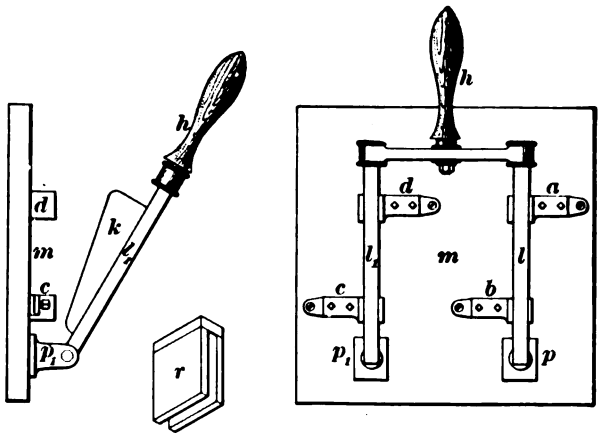

FIG. 53.

switches are provided with one, two, or three blades and sets of contacts, each insulated from the others, and are accordingly called single, double, or triple pole. These names are usually abbreviated to S. P., D. P., and T. P. Sometimes the levers are provided with two contact blades, one on each side, and a second set of contact points is placed on the other side of the pivot, so that by throwing the switch completely

over, that is, moving the handle through 180°, the contact points of this second set are connected together. Such a switch is called a double-throw switch; the switch illustrated in Fig. 53 is a double-pole, single-throw switch.

The contact points are provided with terminals of varying forms, to which the ends of the wires are connected. For use on wooden switchboards and for separate use, jack-knife switches are provided with a slate or marble base (*m*, Fig. 53), on which all the parts are mounted. On slate or marble switchboards, the various parts of the switch are mounted directly on the face of the board, connection with the contact pieces being usually made from the back of the board, so that no wires show in front. These switches should always be mounted on the board with the handle up, so that when opened they will have no tendency to close by their own weight.

124. Bus-Bars.—When several dynamos are to be run in parallel to supply a common set of circuits, it is customary to run a set of heavy wires or bars across the board, to which the dynamo terminals and the circuits may be attached at convenient points. These are called **bus-bars.** For three-wire systems, three bus-bars are necessary, and where two or more *compound-wound* dynamos are run in parallel, for a two-wire system, three bus-bars are also used, two being for the + and − terminals, the third being for the *equalizing connection*, the office of which will be explained later.

Bus-bars are usually made of bare copper rods, to facilitate making connection at any desired point, and are mounted either on the front or on the back of the board. When on the front, they are polished and add much to the appearance of the board. They are usually supported 2 or 3 inches from the face of the board by brass castings, whether on the front or back, and are made of large cross-section, so that the difference of potential between them is practically uniform at all points, even when large currents are flowing through them.

125. Instruments.—It is very desirable to know the output of each dynamo; consequently, an ammeter should be connected in circuit with each machine. The best forms of switchboard ammeters do not require that the whole current should enter the instrument, but instead only a small part, so that the ammeter may be located at any convenient point on the board, and the current carried to it by means of small wires. This is accomplished by making the ammeter of such resistance that when connected in parallel with a short length of the main conductor, or a specially prepared low resistance inserted in the main circuit, enough current will flow through the instrument to cause it to indicate, on a properly divided scale, the amount of the current flowing in the circuit to which it is connected. This often saves a great deal of wiring on a switchboard.

In incandescent-lighting plants, it is very necessary that the voltage of the circuits be maintained as nearly constant as possible, as variations of more than about 2% from the normal will affect either the life of the lamps or the quality of the light. For this reason, a reliable and sensitive voltmeter should be used to indicate the voltage of the various circuits. More than one instrument for the various circuits and dynamos is not necessary, for by the use of a small plug switchboard, which need be only a few inches square, or by the use of a specially devised switch, known as a **voltmeter switch,** a single instrument may be connected at pleasure with the terminals of any dynamo or any circuit, or may be used to indicate the presence of a ground in the dynamos or circuits, in the manner described in Art. **100.**

Switchboard instruments are, as a rule, made with large, open scales, so that they may be read at a distance. Voltmeters are often provided with a pointer, which may be moved by hand to the point where it is desired to keep the voltage constant; then, when the voltage is at the proper point, the voltmeter needle coincides in position with this pointer, which may be seen at a greater distance than the scale can be read.

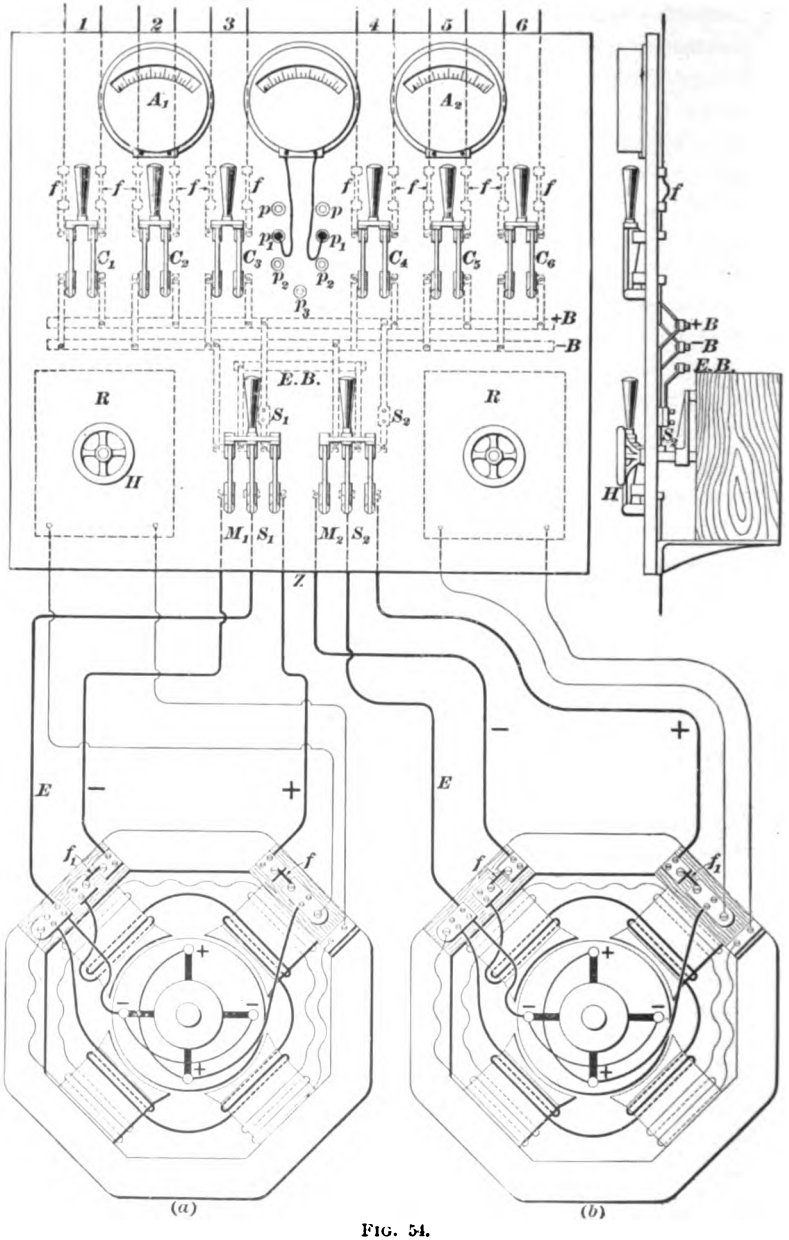
1
2
3
4
5
6
A1
A2
f
p
p1
p2
p3
C1
C2
C3
C4
C5
C6
+B
−B
E.B.
R
H
S1
S2
M1 S1
M2 S2
Z
E
−
+
f1
(a)
(b)

FIG. 54.

Incandescent lamps are often so arranged on the switchboard as to illuminate the scales of the instruments; if this is the case, the lamps should be shaded to prevent the light from shining in any other direction than directly on the face of the instrument, as otherwise they are practically useless.

126. Safety Devices.—To prevent the possible damage to dynamos and circuits, due to an excessive flow of current from any cause, fuses (see Art. **60**) are placed in each lighting circuit, also in each dynamo circuit. Those for the lighting circuits are usually placed at the top of the board, and form convenient points to which to attach the circuits. The dynamo fuses are sometimes placed at the bottom of the board, but more often on the connection board of the dynamo. The fuses should be of sufficient size to carry all the current that the various parts of the circuit in which they are connected will safely transmit.

The larger sizes of fuses are usually made in the form of strips, of rectangular section, mounted on copper terminals of suitable shape and size to clamp under the binding-screws of the fuse block.

The fuse blocks should be located on the back of the board, if possible, for if on the front, the board will be disfigured when the fuses "blow," unless they are completely enclosed.

Lightning-arresters similar to those described in connection with switchboards for arc-lighting circuits are also used for incandescent circuits, provided any part of the circuit runs out of doors for any distance. They are not usually installed on the switchboard itself, but at the point where the circuits leave the building.

127. Equalizing Connection. — When two compound-wound machines are connected in parallel by simply connecting the + terminals together and also the − terminals, each machine will furnish an equal share of the total current at all loads, providing their E. M. F.'s and their internal resistances are always exactly equal. This is seldom the case, however, especially as no two compound-wound

machines are overcompounded exactly alike. To enable them to be run in parallel satisfactorily, some device similar to the equalizing connection must be used. This is the simplest of the several methods, and the one most generally used, so the others need not be described.

Fig. 54 shows a switchboard embracing the features previously described, and showing the equalizing connection for running the two compound-wound dynamos in parallel. In this figure two 4-pole compound-wound dynamos (*a*) and (*b*) are represented. From the terminal boards of each machine three heavy leads *E*, −, and + are carried to the triple-pole, single-throw switches M_1 S_1 and M_2 S_2. The + lead is connected to the right-hand blade of the switch, the − lead to the left-hand blade, and lead *E* to the central blade.

It will be seen that lead *E* is connected to the *armature* terminal on the side that the series coil is connected.

Now, suppose that both machines are running and that both switches M_1 S_1 and M_2 S_2 are closed. This connects the positive or + lead of each machine to the bus-bar $+B$, the negative or − lead of each machine to the bus-bar $-B$, and the *E* lead to the equalizing bus-bar *E B*. By tracing out these circuits, it will be seen that the current from the − bus-bar has two paths open for it to reach the armature brush of either machine, one of which is through the − lead and the series coils of that machine, and the other is through the series coils of the *other* machine and the two *E* leads.

If both machines are furnishing the same amount of current, there will be no current through the equalizing connection; consequently, the current from each machine will flow through its own series coils alone. If, however, through some change in the load, or from some other cause, the E. M. F. of one machine falls below that of the other, so that it (momentarily) furnishes less current, the drop through its series coils will be less than the drop through the series coils of the other machine, so that some of the current furnished by the other machine will flow through the equalizing connection and through the series coils of the first machine, thus bringing up the E. M. F. of this machine to its proper

value and causing it to furnish its share of the current. When the machines are first connected in parallel, their E. M. F.'s are adjusted by the field resistances until the load is equally distributed between them. When this has been done, the equalizing connection will take care of variations in the load.

128. Referring again to Fig. 54, R, R are the resistance-boxes which are included in the field circuits of the two machines, the connections being as indicated. These resistance-boxes are mounted on the back of the board, as indicated in the side view to the right, and the contact arm of each resistance-box which cuts in or out the resistance is operated by a shaft passing through the board and turned by a hand-wheel H.

The bus-bars are located on the back of the board, as indicated, and from them connection is also made on the back of the board to the lower terminals of the six double-pole, single-throw, circuit switches C_1, C_2, C_3, C_4, C_5, and C_6. Just above and connected to the upper terminals of these switches are a series of terminals for attaching the fuses f, f, f, etc., one of which is located in each side of the circuits *1*, *2*, *3*, *4*, *5*, and *6*. The main fuses f_1, f_1, etc., are located on the dynamo terminal boards.

Above the row of circuit switches are located the instruments, two ammeters A_1 and A_2, and a voltmeter V. The small leads from the ammeters (not indicated in the figure) are carried down the back of the board and connected to shunts S_1 and S_2, located in the connection between the + terminals of the switches M_1 S_1 and M_2 S_2 and the + bus-bar. The ammeters are connected in the + lead of the circuit, because all the current from one machine does not always pass through the − lead, on account of the equalizing connection. (See Art. **127.**) It will be seen that this method of connecting up the ammeters results in a great saving of connecting wire over the method which requires that the leads to the ammeter shall be of a size sufficient to carry the total current to be measured.

The voltmeter is provided with a pair of leads terminating in plugs, so that it may be connected to any of the plug contacts p, p, p_1, p_1, p_2, p_2, or p_3, as desired. These contacts are respectively connected by leads (not shown) on the back of the board, as follows: $p\,p$ to the lower (outside) terminals of switch $M_1\ S_1$, so that when the voltmeter is connected to these terminals, it measures the E. M. F. of machine No. 1, whether it is connected to the bus-bar or not; $p_1\,p_1$ to the similar contacts of switch $M_2\ S_2$; $p_2\,p_2$ to the bus-bars $+B$ and $-B$, and p_3 to the ground for the purpose of testing the insulation of the circuits or of the machines. (Art. **125.**)

If desired, lamps may be mounted on the board to illuminate the instruments, and in this case it would be well to supply two for each instrument, and connect one to each of the circuits *outside* the fuses, so that if any fuse should blow, the lamp connected to that circuit would indicate the fact by going out.

129. The foregoing figure and description show the general arrangement of switchboards for incandescent lighting with constant-potential dynamos. The exact arrangement for any particular case of course depends upon the circumstances of that case and the taste and judgment of the designer of the board, the principal object being to get, first, an economical and convenient arrangement of the necessary apparatus, and second, a neat and symmetrical appearance. In large plants employing a number of machines, it is more usual to use shunt-wound dynamos, the potential of which is kept constant by means of resistance-boxes in the field circuits operated by an attendant who has no other duty.

In isolated plants, such as those in theaters, office buildings, and the like, it is often desirable to run the plant on the two-wire system, but also desirable to have it arranged so that in case of accident to the plant, the lighting service can be continued from the mains of some central station, which are quite generally operated on the three-wire system.

To accomplish this, three bus-bars are used on the board, and each circuit has three wires, all lights being connected

between one or the other of the outer wires and the center one, which is made twice the size of the others. When run as a two-wire system, a large single-pole, single-throw switch connects the two outside bus-bars together as one, thus making the two outside wires of each circuit operate as one wire split into two parallel branches.

When it is desired to connect to the three-wire system, this single-pole switch is opened and the three bus-bars connected to the mains of the three-wire system in the regular way. This is known as the **flexible two-wire system,** and is very useful.

SWITCHBOARDS FOR ALTERNATING-CURRENT CIRCUITS.

130. Alternating currents are used largely for incandescent lighting in places where the lights are scattered over a considerable area. The current is generated and distributed at a high pressure (usually about 1,000 volts) to transformers (see Art. **40**) located at various points near where the lights are to be used.

This distribution being at a constant potential, the switchboard used is not much different in its essential features from that just described for direct currents. The exciter for each dynamo must be provided with switches and a field resistance-box on the board; an ammeter is also usually provided, to measure the field current of the alternator. For each alternator there are, therefore, two resistance-boxes (one in the exciter field circuit and one in the alternator field circuit) and two ammeters. However, it is not customary to provide switches for the various circuits supplied by the dynamo, so that the amount of apparatus on the board is about the same as in direct-current work.

Alternators may be run in parallel, but first must be brought into synchronism (see Art. **69**). This involves a considerable amount of extra apparatus on the switchboard, and is liable to result in damage to the machinery if not properly done. For these reasons, alternators are seldom

run in parallel in this country, except in the large stations. If two or more machines are used, it is customary to divide the circuits into a suitable number of groups and run each group from one machine; provision is usually made, however, for throwing any group of circuits from one machine to another, generally by the use of double-throw switches.

On account of the above circumstances, the bus-bars used do not serve quite the same purpose in the alternating-current switchboard that they do in the direct-current, as they act only as connectors for the terminals of all the circuits comprising one group, there being, therefore, a pair of bus-bars for each group of circuits.

Instead of measuring directly the E. M. F. of the alternator, it is customary to use, in connection with the voltmeter, a small transformer, which has the same ratio of transformation as those used in the circuits. The secondary of this transformer is connected to the voltmeter, which, therefore, indicates the E. M. F. of the secondary circuits of the lighting system, 50 or 100 volts, or whatever it may be.

The alternating current at the potentials used on the primary circuits will give a dangerous, probably fatal, shock; the switchboard should therefore be carefully arranged so as to reduce the liability of accidental contact with any part of the primary circuit to a minimum. The high potential also increases the possibility of destructive arcs at the switch points and between the fuse terminals, when a loaded circuit is broken, so that the length of such breaks should be made great, to prevent as far as possible the occurrence of such arcs.

SWITCHBOARDS FOR ELECTRIC RAILROADS.

131. Electric-railroad systems, like incandescent-lighting systems, are operated with constant-potential circuits, usually of about 500 volts potential.

The general features of their switchboards are then similar to those for the lighting systems, some of the details, however, being necessarily somewhat different.

Compound-wound dynamos are generally used, being usually overcompounded from 8 to 12% or more. These are run in parallel, being connected through triple-pole main switches to three bus-bars, as in the lighting switchboard illustrated in Fig. 54.

The current is conveyed to the cars by means of an overhead line supplied by a number of feeders which go out from the station and connect with it at various points, the circuit being completed through the tracks and the ground. The feeders correspond to the various circuits in the lighting system, but are usually connected directly to the proper bus-bar, no switch or fuse being used. The part of the circuit connecting the station with the track or ground circuit is similarly connected to the other bus-bar, an ammeter being usually placed in this circuit to indicate the total output of all the dynamos.

In the circuit of each dynamo, between the main switch and one bus-bar, is connected the ammeter which measures the output of that dynamo, and also a **circuit-breaker,** which is an electromagnetic device for opening the circuit when the current exceeds a certain limit. This device takes the place of the fuses in the lighting system, and is used because it is much more rapid and certain in its action than a fuse. In case of a bad short circuit which causes an extremely heavy current to flow, the electromagnetic circuit-breaker operates almost instantaneously, while a fuse requires a certain length of time to heat up to the melting-point, which may be long enough to allow some damage to be done to the dynamos or engine by the overload.

The electric railroad being much more subject to short circuits and excessive currents than a lighting system, the use of fuses would require the expenditure of a great deal of time in replacing blown fuses, which is saved by the use of the circuit-breaker, since that requires only the movement of its handle to again make the circuit.

Lightning-arresters are provided in railroad as in other electric circuits, and are usually similar in character to those described. One arrester is connected in each feeder

circuit, and, as in the arc-lighting system, they are all connected to a common ground-connection. In addition to this ground-connection, the common connections of all the arresters may be connected to the track or ground bus-bar, but this latter connection should never be used as the only connection to the ground.

132. It will be seen from these remarks that, in general, the object of a switchboard is to enable each dynamo and each circuit to be treated as separate units, and, further, to admit of connecting up these various units in any combination that the business of the station may demand, with ease and rapidity and without danger to the machines, circuits, or operator. To accomplish this requires different apparatus and connections for different circumstances, and no general rule can be given for the arrangement of switchboards for even a particular system; but from the statements made, the manner in which the arrangement and apparatus of any particular switchboard serves its purpose should be readily understood after examining it and tracing out the connections.

ELECTRIC HOISTING AND HAULAGE.

POWER TRANSMISSION AT MINES.

GENERAL CONSIDERATION.

1. In the operation of a mine, one of the most important considerations is the choice of the method of distributing power to operate the various apparatus employed. Whether this power can be transmitted to the best advantage by means of electricity, steam, compressed air, or water power, will depend largely on local conditions.

In a general way, it may be said that the advantages of electricity increase with the distance and the number of points to which power is to be delivered.

With both steam and compressed air the cost of installation and the loss of power (as well as the danger of breakdown) increases rapidly as the system is extended. These systems are also affected in efficiency by changes of temperature, which have no appreciable effect on electrical distribution. Moreover, by reason of their flexibility, electrical conductors are not so generally liable to injury and breakage by floods or shifting ground as are the rigid pipes conveying steam or compressed air.

Up to within a few years, a serious drawback to the use of electricity was the limited application of motors to the different forms of mining machinery, and also the lack of reliability in their operation. Recent advances, however, have been so great that this form of power is rapidly coming

to the foreground for mine haulage, hoisting, pumping, lighting, surface traction, and the operation of machine shops.

2. Long-Distance Transmission.—Electricity may be said to excel other methods where water power is available within a reasonable distance, say up to 40 or 50 miles (depending on the relative cost of fuel), when the local conditions require the use of power at scattered points, or where the mine is off the line of railroad and the haulage of fuel involves heavy expense. In this latter case, the placing of an electric generating station at some central point and the transmission of current to the various places where power is used, both on the surface and underground, will generally effect considerable saving.

3. Relative Advantages of Electricity and Steam or Compressed Air.—Where the bulk of power is used for drilling and pumping near the boiler plant, steam and compressed air have an advantage, as the reciprocating motion of the steam and compressed-air cylinder is more advantageous in these operations than the rotary motion of the electric motor. On the other hand, a more extended use of hoisting, hauling, and ventilating machinery will generally favor the use of electricity, especially in view of the added advantage of its use for lighting and the greater flexibility of the installation.

4. Haulage. — With long hauls and small tonnage, wagon haulage is undoubtedly the most economical where roads of reasonable quality and grade are available. As the distance shortens or the tonnage increases, the use of a track becomes advisable, and ultimately on this track the locomotive or cable replaces the mule or horse in economy. Again, the limitation in the use of locomotives to grades not exceeding 4% to 5% where they are long or continuous will often decide in favor of the hoisting drum and cable or the overhead cable with buckets. Then, again, for short distances and large tonnage, the use of conveyer belt or bucket must receive consideration.

In connection with the use of tramways, it is interesting to know that whereas the pulling power (or direct pull) required to haul 1 ton on rails at the rate of 3 miles per hour ranges from 4 to 12 pounds, the power required for macadam road is from 45 to 65, and for an ordinary dirt road it is over 200 pounds.

In any case the form of power to be used will depend largely upon the question which form can be used to the most advantage for the largest number of purposes. Each system has its advocates, and caution should be observed in accepting the data and comparisons used in trade catalogues by manufacturers anxious to sell their own wares.

ELECTRICAL TRANSMISSION.

5. In the event of the selection of electricity, the choice of the system must be determined—whether direct (continuous), simple, alternating, or polyphase current machines shall be used, or possibly a combination of two of these systems. The voltage of the direct-current machine is limited in practice to about 600 volts, due to complications in insulation and to increasing the number of segments of the commutator for higher voltages.

For these reasons, direct-current generating apparatus can not be used to advantage when the power is to be transmitted for long distances. Roughly speaking, a wire of a certain cross-section will carry a given number of amperes of current without undue heating. As the *power* or watts carried is the product of the amperes multiplied by the volts, twice as much power can be transmitted over the same wire by doubling the voltage, and so on in the same ratio.

This law is to be compared to the capacity of piping, carrying water under varying pressures, except that with water the friction increases with the speed of flow. As a general statement, it may be said that in the electrical transmission of power a loss of over 10%, at most 15, in the line is not permissible, even where the source of power is water.

A more detailed explanation of this statement will not be amiss. Taking, for example, a case where an abundant water power is available: at first sight it would seem that as the prime energy is secured at a nominal cost, the loss of even 25% and over, caused by the use of small wires in transmission, would be more than offset by the saving in cost of copper. This expense for conductors for distances of over 25 miles may amount to more than one-half the total cost of installation. Several causes combine to effect this; among them are:

1. It is difficult to regulate the voltage at the point of using the electric current when there are constant variations of load, as the potential will decrease rapidly as the load increases, and *vice versa*. This fluctuation changes the speed of motors and the brilliancy of lights. (There would, of course, be little drop under no load.)

2. The interest on the increased cost of installing the larger water-wheels or turbines, dynamos, and fittings largely offsets the expense of larger conductors.

CHOICE OF SYSTEM.

6. For the transmission of energy for short distances (not exceeding say 2 miles) where it is to be used chiefly for power and incidentally for lighting, the choice will rest between

(*a*) The direct current, not exceeding 600 volts for surface, 500 volts for underground, and

(*b*) The multiphase-alternating current with either induction or synchronous motors, with the addition, where electric locomotives are to be used, of rotary transformers to supply direct current to them.

7. For the transmission of energy for lighting, with incidental use for power, the monocyclic system or two-phase three-wire system is preferable. With the monocyclic system the lighting current is conducted by two wires, a

third wire brought from an intermediate point in the wiring of the dynamo being added for power use.

8. Long-distance transmission requires some form of alternating current, as the cost of conductors for the low-potential direct current would be prohibitive.

With the use of electricity, the greatest freedom is permitted in selecting a site for the power plant. Instead of being arbitrarily located at or in the immediate vicinity of the mine shaft or mill, it may be placed with due reference to the cheap delivery of fuel, and also due regard to a satisfactory supply of water for the boiler and condensing engine.

Moreover, where power is used at several scattered shafts or works, one generating plant only will be necessary, in which efficient, large unit boilers and engines can be installed.

PRACTICAL EXAMPLES.

9. Metropolitan Railway Company of New York City.—This plant furnishes a good example of the economy effected by the centralization of plant, and may be described as follows:

The power station supplies current for the widely scattered electric-car lines of the Metropolitan system, and is located between Ninety-fifth and Ninety-sixth Streets, First Avenue and the East River. Although this location can not be called a central point of distribution, the greater facility with which coal and ashes can be handled and the unlimited supply of water from the river for condensing purposes, in addition to the much lower cost of land, governed the selection.

10. The building is a steel-frame structure with brick walls. The ground plan is 200′ × 280′. The boiler room will contain 87 Babcock & Wilcox water-tube boilers in three tiers, each boiler having a rated capacity of 250 H. P., capable of being forced to 400. An engine room of about 100′ × 200′

will contain 11 vertical cross-compound condensing Allis engines of 4,500 indicated H. P. each at their maximum efficiency, but capable of running continuously at 6,000 H. P., and for a short time at 7,000. To these engines will be coupled 3,500-kilowatt generators of the General Electric Company (approximately 4,700 H. P.). The generators will run at 75 revolutions per minute.

The entire floor above the boilers will be occupied by the steel coal-bins, with a capacity of 9,000 tons. The chimney is the largest in the world, being 353 feet high, with a 22-foot core. As the ground was very poor for the foundation, over 1,200 piles were driven, and these were topped with a solid block of concrete 85 feet square and 20 feet deep. The chimney built upon this block contains over 3,500,000 bricks.

11. At Fiftieth Street and Sixth Avenue, nearly 2½ miles away, a substation with a capacity of over 6,500 H. P. will convert the high-pressure three-phase current (6,000 volts) to the necessary 550 volts direct current for use on the conduit-trolley line, by means of rotary transformers. At One Hundred and Forty-sixth Street, also about 2½ miles away, another substation will be located with a capacity of 5,300 H. P. Three and one-half miles away, in Twenty-fifth Street, there will be one of 6,300 H. P., and at Houston Street, 5 miles away, one of the same capacity. The farthest, located at the lower extreme of the city, 7 miles away, will be of 4,000 H. P. Two additional stations will probably be located in the lower end of the city at a later date.

This plant with its 45,000 H. P. capacity forms one of the most interesting examples of the extensive transmission of electric power where the current is used almost exclusively for street-railway work and where all wires have to be placed underground. The main cables are insulated with rubber and woven braid and covered on the outside with heavy lead tubing. This is then drawn through vitrified brick conduits adjoining in most cases the tracks of the company.

12. Southern California Power Company's Plant.—Ordinarily a distance of 50 miles is the practical limit of electrical-power transmission, but in localities where fuel is expensive and large amounts of power are required, a much greater distance is practicable, especially where water power may be obtained. This case is well illustrated by the plant under consideration, which may be described as follows:

13. In the mountains 83 miles from Los Angeles, water power under a head of 700 feet is used to drive (Pelton) water-wheels coupled direct to three-phase generators of 750 volts pressure. This current is transformed in three sets of static transformers to 1,900 volts, giving a working pressure on the line of 3,300 volts. Four 1,000 H. P. dynamos are now operated and six additional machines of the same size are being installed. The current is used at Los Angeles for lighting, street-railway, and other power purposes. For the trolley service, the necessary direct current is secured by means of rotary transformers. In mines favorably located below the source of water power, water-wheels and hydraulic motors can be utilized direct for hoisting and pumping; but for one such case there are a score where the water is located below the point where it is required, with hills intervening, or too far away to be piped.

TRANSMISSION LINE.

14. Having determined the location of the power plant and the electric system to be employed, the next consideration is the construction of the transmitting line.

(For methods of installing dynamos and wiring switchboard and station connections, see *Dynamos and Motors.*)

15. Line Construction.—Whether a high or low tension system is used, it is advisable to construct the pole line in the most substantial manner. Twenty-five to thirty-five foot poles of not less than 5 inches in diameter at the top should be used. These should be set at least 4 feet in the ground,

preferably 5. The pole hole should be dug large enough to permit the butt of the pole being dropped straight in without forcing and should be filled in slowly with dirt, tamped with iron rods to insure thorough packing of the earth. Poles used at corners or angles should be preferably of 7 inches top diameter when heavy wires are carried, and sufficiently long to permit of their being set 5 feet 6 inches in the ground. Where the ground is moist, it is well to smear the butt end of poles with pitch or tar and have this extend at least 2 feet above the ground line. The proper distance between poles will depend on the character of the ground and the weight and physical strength of the wire. One hundred feet interval is perhaps the best for general conditions, and a distance of 125 feet should never be exceeded, except with the use of aluminum conductors. This metal is only about half the weight of copper for equal conductivity and equal breaking strain, so that a much longer span is permissible. For every 5 feet added to the length of the pole, it should be set an additional 6 inches in the ground.

16. Insulation.—There are two methods of insulating conductors carrying electricity at high pressure—continuous insulation and interval insulation. In the former, the wire or cable is covered or coated throughout its length with rubber or other insulating material. In the latter, bare wire is supported at intervals on glass, porcelain, or composition insulators. In the aerial transmission of very high pressure currents, complete reliance must be placed on the quality of pole insulators and on the mechanical strength of the wire and line construction.

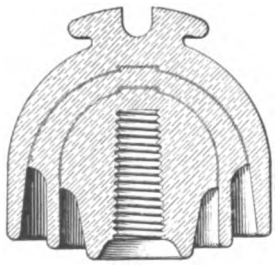

FIG. 1.

Figs. 1 and 2 show double-petticoated porcelain insulators, such as are used in high-tension work. The shaded lines show that it is made in sections and melted together by the vitrifying furnace. Where high-tension wires

cross telephone or telegraph lines, it is best to place the high-tension wires above, or if below, to protect them by guard wires to prevent the grounding of the system in the event of the breaking of the lighter wires.

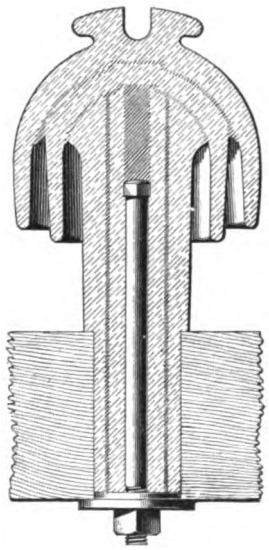

FIG. 2.

17. Lightning-Arresters. — In high altitudes and exposed country, the line should be protected by occasional lightning-arresters. Several different forms are effective. They are connected to the line at the terminals and at exposed points. One side is connected to the line by heavy wire or cable, the other to the earth, and it is essential that the latter section should be carried to moist ground in order to be effective. One type consists of series of cylinders of so-called non-arcing metal, placed parallel and close to each other, with little gaps between, which the lightning will jump across, but which could not be spanned by the relatively low tension of the service current.

The term non-arcing metal is used for the reason that the gases formed by the burning metal due to the passage of the lightning discharge do not form a conducting path for the current of the line, as is the case with the majority of the metals. In another type the lightning jumps a small air-gap between two horns spreading out from each other, and there is placed a strong magnet whose lines of magnetic force pass across this gap with the effect of counteracting the arc, or, as it is expressed, "blowing it out." A third form consists of two large disks of metal placed with a small interval between them and with a sufficient surface to radiate the heat so rapidly that the arc or center of heat is dissipated.

18. Interior and Underground Wiring. — The electric current may be carried at high potential to the entrance of a building or mine and with carefully insulated cables at pressures up to 1,000 volts to central distributing points in mine or building, there to be converted to a pressure not to exceed 500 volts. This voltage is not sufficiently high to seriously injure any healthy person who may accidentally handle the bare conductors or connections of a machine. The method of running the wire cables down a shaft will depend on the available space, or whether it is "wet," and on the voltage of the current.

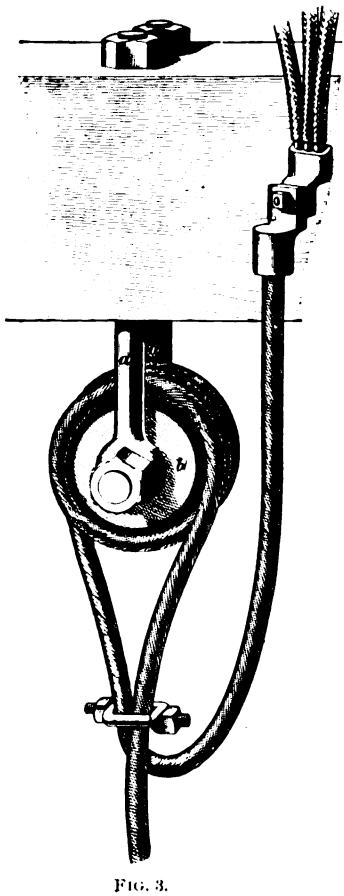

FIG. 3.

19. An ingenious device is shown in Fig. 3, by means of which cables may be suspended in vertical shafts. This device consists of a pulley with heavy bolts for attaching to the beam at the head of the shaft and projecting downwards. The large hardwood rollers are soaked in paraffin or paint and covered with soft rubber. The ends of the cable are carried around these pulleys two or three times, and then down the shaft, where they should be firmly attached to the side of the shaft on insulators at frequent intervals. The upper ends are connected to the outside feeders by heavy brass couplings which permit of being disconnected at will.

20. Where the current is to be used for underground locomotive traction, bare wire must be used along the haulageways. This wire is attached to the roof of the tunnel or gallery, between or over one of the rails, according to the character of the roof or the location of the trolley-pole on the electric locomotive. The trolley supports may be placed at from 25 to 40 feet apart.

21. Hangers.—Where the entry is timbered overhead, the hangers and insulators supporting the trolley-wires can be attached to these, otherwise special supports will be necessary. They must be strong enough to hold the weight of the wire and to withstand the constant jar and vibration to which it is subjected. Where the roof is good and its height uniform, the supports can be attached directly to it. Fig. 4 shows a good form of hanger and insulator. The insulating substance *a* is protected from injury by accidental blows by a metal hood-shaped covering *b*. The insulating material in the center has steel studs insulated from each other, projecting upwards and downwards. The upper one is fastened to the iron hood which has arms *c* for attaching to the roof. To the lower stud *e* is fastened the clamp *d* for holding the trolley-wire. This clamp consists of two jaws of bronze, hinged to an interlocking pin which passes through the head of the stud-bolt. The clamping effect is secured by screwing the cone-shaped nut down on the stud-bolt; this spreads the upper part of the jaws apart and tightens the grip on the wire. The clamp *d* can be loosened at any time for readjustment by turning the nut *e*.

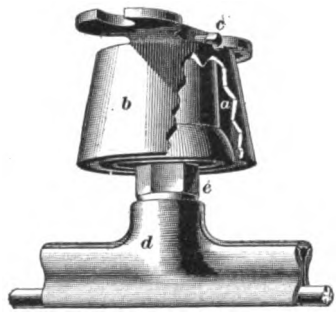

FIG. 4.

22. Fig. 5 shows a trolley hanger and the method of suspending it from the roof. A hole is drilled in the top rock, and a bolt with its upper end made wedge shape and larger

than the diameter of its stem is placed in the hole. A short piece of gas-pipe which is split at its upper end is also placed in the hole and over the bolt. A hole is then bored in a piece of 4″ × 3″ timber, just large enough to admit the bolt and prevent the gas-pipe from entering it when the piece of timber is put over the bolt and up against the roof, and the nut on the end of the bolt is tightened up. It can be seen that as this nut is screwed up the widened portion of the bolt is wedged tightly into the gas-pipe, which is in turn forced against the side of the hole. The block of wood is supported in this manner at two points, and the insulated hanger is screwed into it. This device serves very well where the roof is approximately the proper height for the trolley-wire, but where the roof is high, it is a good plan to drill two holes about 2 inches in diameter and 10 inches deep, and about 12 inches apart, crosswise over one of the rails. Wooden plugs are then driven into the holes and sawed off the proper height above the rails, and a piece of 1½″ × 4″ × 14″ timber nailed on to the ends of the plugs by using three twentypenny spikes in each.

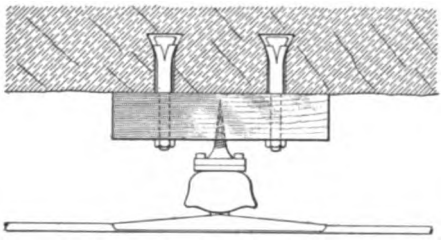

FIG. 5.

Malleable-iron pins are also made in two halves, one having projections, the other smooth. The half with projections is first placed in the drilled hole in the roof and the other or smooth half is then driven up beside it. This form is very satisfactory with a good roof.

23. Frogs.—Fig. 6 shows a frog used at junction points. It is similar to those used in street-railway practice. Being placed just forwards of the switch in the track, the trolley arm before reaching it has received an inclination in the direction the locomotive is taking and automatically shifts to the correct overhead wire.

24. Return Circuit.—In mine traction as in surface traction, the rails, properly bonded, are generally used for the return circuit. That is so say, the current passes from the bare trolley-wire, through the trolley arm to the starting resistance and motor, and through the frame of the motor and wheels to the rails, and so back to the generator. The conductivity of iron being low and the fish-plates connecting the different lengths of rails being liable to rust (which

FIG. 6.

largely destroys its conductivity), the path for the return current is assisted by "bonding," which consists in connecting the rails together with copper wire by wedging or soldering the ends of a short piece of heavy copper wire into the web of adjoining rails. Cross connections between opposite rails should be made not less than every 150 feet. The method of bonding, by winding copper wire around the bolts before the fish-plates are put on, is not to be recommended.

25. Arrangement and Protection of Conductors.—From the end of the rails to the power house it is well to use a cable for the return circuit. Where the current is to be used exclusively for other purposes than traction, bare wires exposed for their entire length are not essential, and insulated cables may be used with the alternating system (single, two, or three phase) up to 1,000 volts potential. Current can be conveyed to central points at this pressure and converted at substations in the mine to the working voltage by means of static transformers. However, this would be done only where the distance from the mine shaft was considerable or where a large amount of current was used, making the cost of copper for conveying at 500 volts, without too great loss, a serious item of expense. The wires or cable should be placed at one side of the gallery, as much out of

the way as possible, to avoid injury to miner or mule (stock) from accidental contact. It is wise to conduct the current in any case through mains or feeders, and to have the system divided into sections with switches, so that the shutting down of one portion for repair or extension need not affect the balance. Where the wires cross main gangways, it is wise to protect them thoroughly against chance contact or mechanical injury; this may be done by covering them with split rubber hose and binding it at intervals with rubber tape.

26. Carrying Capacity of Wires.—The safe carrying capacity of wires is given in the following tables for bare wire and wire enclosed in moldings or conduits. The reason for the great difference in capacity is due to the fact that in one case the heat can radiate and in the other it accumulates.

TABLE I.

SAFE CARRYING CAPACITY OF BARE WIRES.

Brown & Sharp. Gauge Number.	Safe Carrying Capacity. Current in Amperes.
0000	300
000	245
00	215
0	190
1	160
2	135
3	115
4	100
5	90
6	80
7	67
8	60

TABLE II.

CARRYING CAPACITY OF WIRES WHEN ENCLOSED.

Brown & Sharp. Gauge Number.	Amperes.
0000	175
000	145
00	120
0	100
1	95
2	70
3	60
4	50
5	45
6	35
7	30
8	25

27. Danger of Injury from Shock.—It is not wise to touch a bare conductor carrying current at a pressure of over 110 volts, unless you are provided with gloves made of rubber or standing upon some dry insulating material. This fact should be remembered by persons traveling along headings where the conductors may be touched by some part of the body. A person wearing dry rubber boots or standing on dry wood may touch a single conductor through which a current of high voltage is passing without injury, provided he does not make contact with the negative conductor (generally the earth) with some exposed part of the body.

A dynamo or motor may become "charged" by injury to the wiring or on account of some loose coils touching the body of the machine. In such a case it is exceedingly dangerous to touch any part of the machine, for it will discharge through your body into the earth. It is a

wise precaution to connect the frames of pumps and other machines run by electricity to the earth to prevent their becoming charged and inflicting possible injury to those handling them.

ELECTRIC HOISTING.

GENERAL CONSIDERATION.

28. The electric motor is an ideal form of power engine for hoisting. Having a rotary motion, the intervention of a crank with its varying power at different positions is not necessary, as is the case with the use of steam or compressed air. Hoisting-engines used in mining are frequently located quite a distance from the boilers, necessitating great length of pipe for delivery of steam. In addition to the losses from condensation, there is constant danger of blowing out the cylinder-head from having water collected in it. As hoisting-engines are used intermittently, this will be a very serious source of trouble unless the engine and pipes are carefully drained before starting. In cold weather, ice may also form in the pipe and engine and cause accident. The electric-motor hoist reduces dangers from careless handling to a minimum.

PRACTICAL EXAMPLES.

29. Fig. 7 shows a direct-current electric mining hoist. The motor is one of the armored railway type built by the General Electric Company. It is enclosed as shown, the case *a* forming part of the field magnet and protecting the machine from dust and dirt as well as mechanical injury. The controller *b* is of the street-car type, and is mounted so as to be convenient for the operator to observe the necessary signals. The current is regulated by the lever *c*, and

reversed when necessary by the lever *d*. The pinion upon the axis of the armature gears with the spur-wheel upon the shaft *e*. These gear-wheels are enclosed in the case *f*, which not only protects them from dust and dirt, but also furnishes a receptacle for oil, which insures continuous and perfect lubrication. On the right-hand end of the shaft *e* there is a pinion that gears with the large spur-wheel *h*,

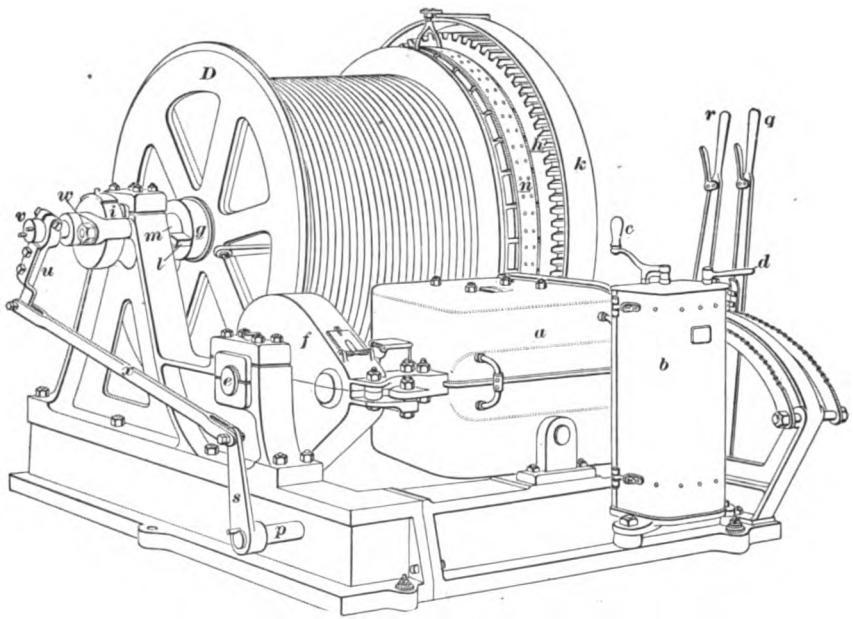

FIG. 7.

which is covered by the protective band *k*. The gear-wheel *h* is fixed rigidly to the drum shaft *m*, while the drum runs loosely upon it. The band brake *n*, which consists of a flat iron band having a number of wooden blocks attached to its inner side by means of wood-screws, engages with the drum and is applied or released by the lever *r*. The lever *q* operates the patent friction-clutch through the

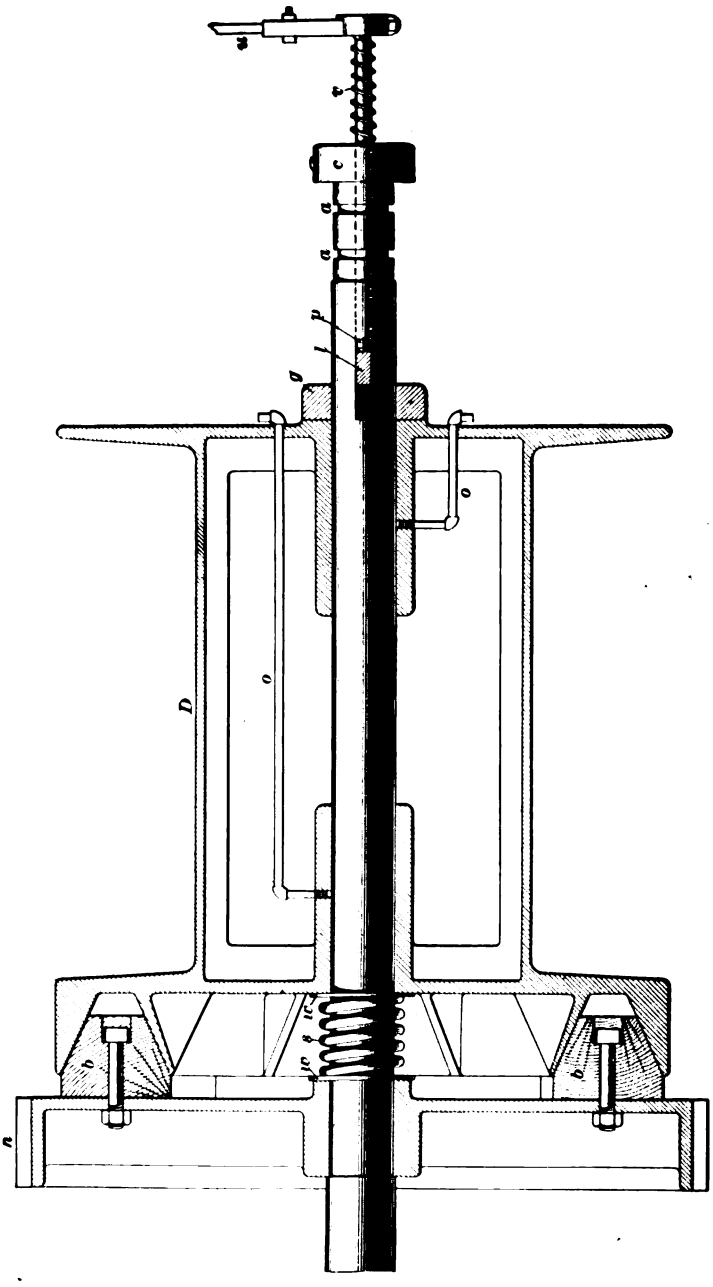

FIG. 8.

horizontal shaft *p*, the lever *s*, the link *x*, and the lever *u*. When the screw *v* is slightly turned by this system of levers, it is forced into the nut *w* and against the end of a concentric steel pin which passes through the shaft *m* to the cross-key *l*. This key then forces the washer *g* against the drum, which is pushed to the right and engages with the friction-clutch. The bearing between the end of the concentric pin and the screw is kept well lubricated by means of the oil case *i*.

30. Fig. 8 shows a section of the drum *D*, Fig. 7, illustrating the construction and action of the Beekman patent friction-clutch as built by the Lidgerwood Manufacturing Company of New York. Large wooden blocks *b* are bolted to the side of the spur-wheel *h*, and they are made of suitable shape to conform to the V-shaped groove in the side of the drum *D*. The steel spring *s* between the two steel washers *w*, *w* disengages the brake as soon as the pressure is relieved from the opposite side of the drum. It can be clearly seen from the figure that, as was previously stated, when the lever *u* (Fig. 7) is turned, the screw *v* is forced against the end of the concentric steel pin *p*, which in turn presses the cross-key *l* against the collar *g*. This collar presses the side of the drum, which then frictionally engages with the large spur-wheel *h*. The drum shaft is prevented from moving longitudinally by means of the grooves *a*, *a* and the screw collar *c*. The wide bearings of the drum on its shaft are lubricated by means of the pipes *o*, *o*.

31. This hoist is provided with separate resistance to regulate the speed of the armature when the motor is working under different loads; it is especially suitable for a single shaft, for the friction-clutch can be used while hoisting the cage and the band brake used in lowering it, provided it is not necessary to reverse the current and use the power. The rope may coil upon the drum in several layers, unless the hoist is used to raise material out of two adjacent

shafts or a double shaft, in which case both ropes are attached to the middle of the drum and wind upon it towards the ends; or, better still, one rope may be attached at the middle and the other at the side of the drum, so that the stress will be placed more equally upon the bearings of the drum shaft. With this arrangement, the ropes can not be accurately or conveniently adjusted to make the rails on the cage at the top, and those on the cage at the bottom fall in line with the rails of the roads at the top and bottom.

32. After considerable use, the ropes vary in length, and rather than attempt to adjust one or the other of them, blocks are sometimes bolted to one end of the drum to increase its circumference and thereby take up the required amount of rope to land the cage properly and prevent undue jars and stresses when starting to hoist. In many large mining hoists, the ropes are adjusted by means of internal positive clutches. This arrangement is very convenient where the shafts are deep and the ropes necessarily long.

33. When two ropes are attached to a single drum, the length of rope is limited to the width of drum, as not more than one layer of rope can be wound upon the drum, while if double drums or single drums with one rope are used, several layers of rope may be coiled upon the drum. This, however, is not good practice in hoisting, although in haulage practice the rope usually winds upon itself. Hoisting drums are generally provided with spiral grooves, which guide the rope and furnish a good bed for it.

34. The hoist shown in Fig. 7 weighs about 24,000 pounds and can hoist 6,000 pounds (gross load) at a speed of 500 feet per minute. The drum has a 36-inch face and is 60 inches in diameter. The motor makes 700 revolutions per minute and is rated at 110 horsepower. Hoists of this type and size are used at small mines and for auxiliary hoisting at large mines. Motors are used to run large double drums instead of the steam-engine, but the conditions at the majority of mines are such as to make it uneconomical; for it

would not be good policy to incur the double cost of transforming the steam energy into electrical energy when steam can be used directly and near where it is generated.

35. Fig. 9 shows a direct-current electric mining hoist quite similar to that shown in Fig. 7, except that it has a

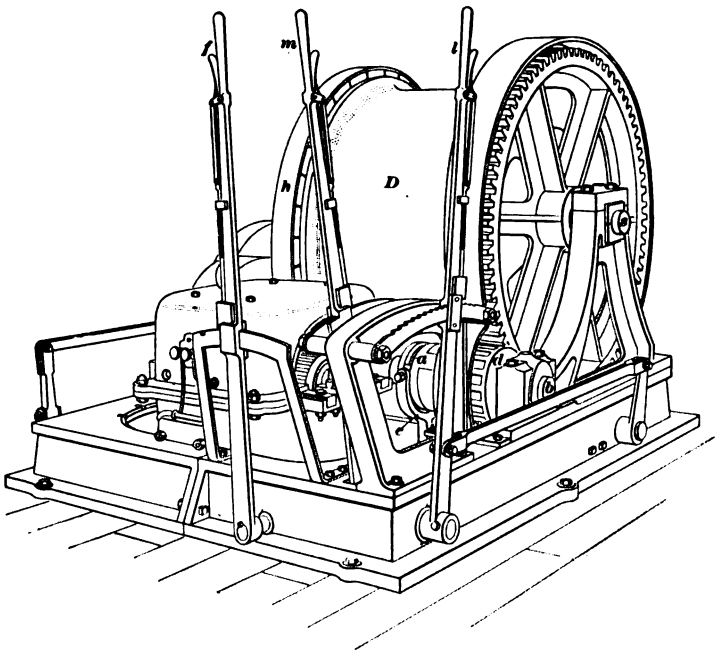

FIG. 9.

jaw clutch *a*, which moves longitudinally along the shaft *b* on a feather, which prevents it from turning except when the shaft turns. The drum *D* is fixed to the shaft *s*, and the pinion *d* is loose on the shaft *b*. The face of the clutch next the pinion *d* has a number of sectoral projections and recesses which fit into corresponding recesses and projections on the adjacent side of the pinion. The clutch is thrown in or out of gear by the bifurcated upright *e* which is operated by the hand lever *f*. The bifurcated ends of the upright have suitable projections bolted to them, which run

in the annular groove in the clutch *a*. This form of clutch is positive and can not be thrown in gear when the motor is running at any considerable speed unless the projections

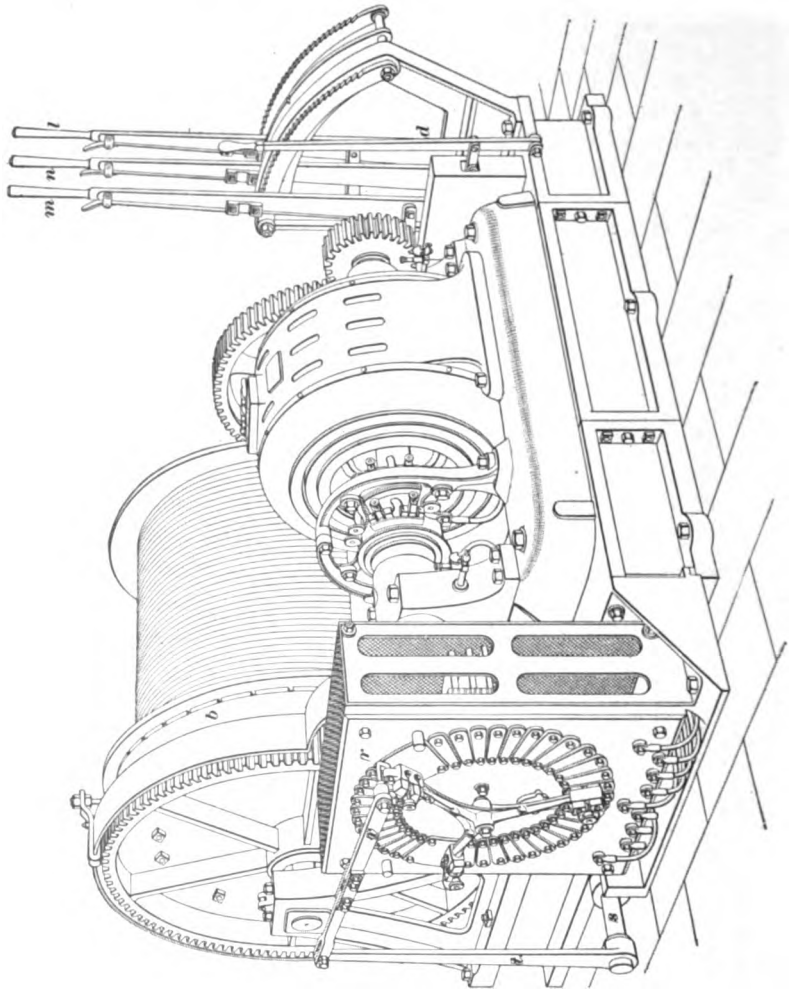

FIG. 10.

and recesses have considerable play, in which case the entire hoist is subject to great stresses if the gear is thrown in while the motor is running.

The cage may be lowered by throwing the clutch out of gear and using the band brake *h* which is operated by the hand lever *l*. The motor and the resistance are controlled by the hand lever *m*. This hoist is built to raise 6,000 pounds with current supplied at a voltage of from 250 to 500, and it is especially suitable for local hoisting in wet places. The face of the drum is smooth and the rope may wind upon itself.

36. Fig. 10 shows an induction-motor mining hoist provided with a patent friction drum operated by the lever *l* and a band brake *b* operated by the lever *m*. The motor is of the three-phase induction type and is provided with a resistance in the armature circuit and external contacts for varying the same. The motor may be wound for a voltage of from 110 to 500, and can be adapted for use on two or three phased systems. The controller is so constructed that a speed varying from maximum to zero can be obtained as readily as if a steam-engine were used. The external contact arms *c* are placed upon the resistance box *r*, and are operated by the hand lever *n*, through the horizontal shaft *s*, lever *t*, and link *v*. The current is reversed by the lever *d*.

37. Fig. 11 shows an electric hoist made by the Lambert Hoisting Engine Company of Newark, New Jersey. The armored continuous-current motor *M* is connected to the pinion *n*, which gears with the spur-wheel *w*, on whose shaft there is a pinion that gears with the large spur-wheel *s*. The current is regulated by the small crank *a* on the controller *C*. This hoist is provided with a patent friction-clutch that is operated by the lever *l*; also the band brake *b*, operated by the lever *p*. The gear-wheels are covered with bands *e* and *f*, in order to prevent anything from falling between them.

38. Fig. 12 shows a double independent drum hoist having an induction motor *M* and controller *C*, which are similar to those shown in Fig. 10. The levers for controlling the patent friction-clutches and band brakes and the

lever on the controller are all placed so as to be convenient for the operator, who stands upon a platform above the floor

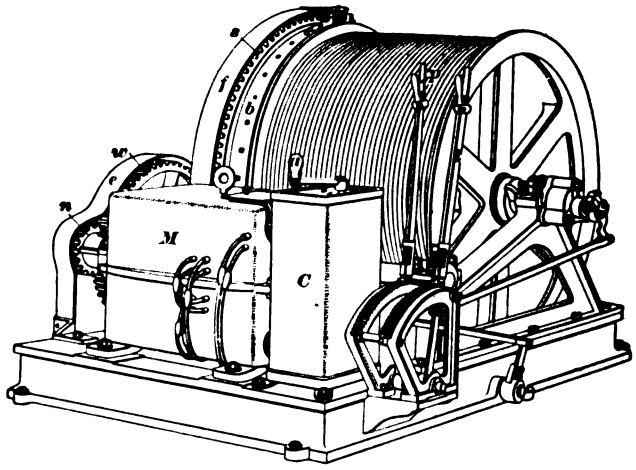

FIG. 11.

in order to get a clear view over the top of the hoist. Each friction drum is driven through a single-reduction gearing

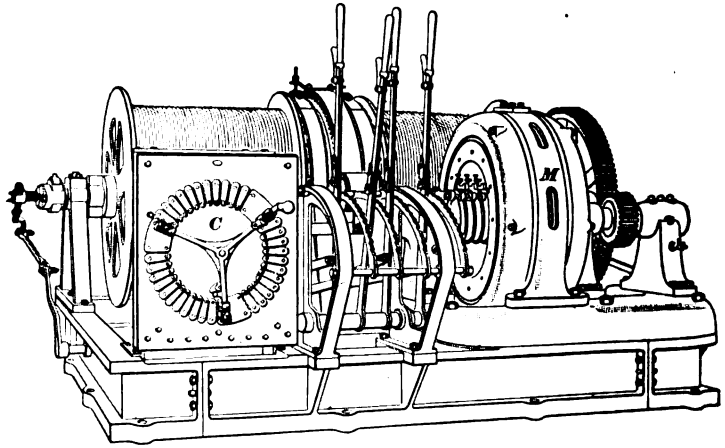

FIG. 12.

by a 100-volt 12-pole induction motor of 30 horsepower running at 600 revolutions per minute. Each drum is

independent and of 42 inches diameter, has a 40-inch face, and will wind about 420 feet of $\frac{7}{8}$-inch rope. The maximum hoisting speed is 300 feet per minute and the weight hoisted, including load, car, and cage, is 2,100 pounds. The depth from which the load is hoisted is 400 feet from the surface.

ELECTRIC HAULAGE.

39. General Consideration.—Electric motors may be employed for operating drums for tail-rope, endless-rope, or other haulage systems, but these could not properly be called systems of electric haulage, as the electric motors can be replaced by engines without affecting the means of drawing the cars. In the present treatment of the subject, electric haulage is taken to mean a system by means of which the motors are placed upon electric locomotives and travel with the cars.

40. Haulage in mines is usually accomplished in two divisions. The cars are hauled between the shaft bottom or outside landing, and the turnout near the working places in the mine by means of the main system, and between the turnout and the different working places by means of mules or horses. These divisions are called the general and the local haulage, respectively. The former is done in large trips and the latter in small trips of from one to ten cars, and consists in hauling the empty cars in and the loaded ones from the working places. In some mines the local haulage, which is often termed **gathering,** is partially done by electric locomotives; but in such cases, electricity is used for running the mining machines, the trolley-wire being also used to conduct the current to the machines. Gathering with locomotives operated by a trolley has not been entirely successful. The storage-battery locomotive is now being experimented with and bids fair to prove successful in this work.

41. Advantages of the Electric Locomotive.—The compactness of the electric locomotive and the fact that

it can run in lower entries than either the steam locomotive or the mule make it specially advantageous for mine operations. The mechanism can also be better protected from injury and is more readily accessible for repair. All working parts, with the exception of the controlling mechanism, are practically enclosed in a heavy, rigid, cast-iron frame, and heavy metal or wooden doors on the top of the frame secure the parts from damage by water or falling rock from the roof.

42. Construction and Arrangement of Mine Locomotives.—Motors constructed for mine locomotives are generally of the iron-clad, single-reduction-gear type, with the gearing running in tight cases containing oil. The motors are controlled by either the rheostat (resistance method) or by a series-parallel controller. In the latter, the current passes, on the first movement of the lever, through a temporary resistance, then through each motor in series. The resistance is then cut out, either by the next position of the lever or in successive steps. The motors are then thrown in parallel, that is, the current passes through each one separately with an added resistance; the final step cuts out this resistance. It is evident that with 500 volts on the line when the motors are placed in series, each one gets the equivalent of 250 volts, and when in parallel, each has the benefit of the 500 volts on the line. It is very essential that the resistance used with the controller should be of sufficient carrying capacity not to overheat if the operator carelessly allows the motors to run with the controller in such position as to include it.

43. Apparatus for mines should be constructed with a view to running without chance of breakdown under the most unfavorable conditions rather than under proper ones. Among careless mechanics and operators there is always temptation to neglect the apparatus as long as it will run. Too much stress can not be laid upon the importance of constant inspection and attention.

44. Speeds.—Electric locomotives for mines are generally designed to run at speeds of from 5 to 10 miles an hour, and most of the standard makes are designed to run at 6 miles an hour at their maximum power.

45. Electric Locomotives vs. The Mule.—Often a single electric locomotive can handle the entire haulage of a mine and replace the work of many mules. The latter constantly block each other in main gangways when material is collected from many galleries, and as the output of a mine is often limited by the amount of material that can be hauled out through the main passage, the greater speed of the locomotive and its ability to haul in one load many times the number of cars that a mule is capable of will frequently greatly increase the output of a mine and materially cheapen the general cost of production. Then, again, where the seam or vein is thin, the locomotive can operate with a headroom of 3 feet 6 inches to 4 feet, while the mule will require over 5 feet. Another advantage is that the locomotive can work for 24 hours, if necessary, without getting tired, while several shifts of mules would be required, with the consequent trouble of feeding and accommodating a large number of animals underground or occasioning delay in hoisting them to the surface.

46. Electric vs. Rope Haulage.—It is a difficult matter to compare the relative advantages of rope and locomotive haulage, for this question will depend upon so many minor details; but it is certain that locomotive haulage will not be available where there are grades of over 5%, as the traction-engine can haul on this grade only about one-tenth of the capacity which it can haul on a level track. The energy expended in overcoming the weight of the locomotive and cars takes the major part of this capacity. With rope haulage, the load factor of the cars is the only one which is to be considered.

47. Size and Capacity of Electric Locomotives.—Electric locomotives are always operated by direct-current

TABLE III.

LIMITING DIMENSIONS OF DOUBLE-END BALDWIN-WESTINGHOUSE MINE LOCOMOTIVES.

LOCOMOTIVES HAVING OUTSIDE FRAMES.

CLASS.	Min. Gauge. Inches.	Diam. of Drivers. Inches.	WHEEL-BASE. Motors Tandem. Inches.	WHEEL-BASE. Motors Central. Inches.	Height Exclusive of Trolley. Inches.	Minimum Width. Inches.	Max. Gauge for Min. Width Inches.	Length Excluding Bumpers.	Weight. Pounds.
$4\frac{3}{6}$ C	20	20	30	38	24	37	20	10′ 8″	4,000
$4\frac{2}{10}$ C	24	24	40	46	32	43	25	11′ 4″	7,500
$4\frac{2}{10}$ C	30	28	40	50	34	50	32	11′ 6″	7,500
$4\frac{2}{15}$ C	30	28	44	52	34	51	32	11′ 10″	10,000
$4\frac{2}{25}$ C	30	30	44	54	36	52	32	12′ 0″	15,000
$4\frac{2}{35}$ C	35	30	48	56	38	58	40	12′ 0″	20,000
$4\frac{2}{50}$ C	35	30	48	56	38	59	40	12′ 0″	26,000

LOCOMOTIVES HAVING INSIDE FRAMES.

CLASS.	Min. Gauge. Inches.	Diam. of Drivers. Inches.	WHEEL-BASE. Motors Tandem. Inches.	WHEEL-BASE. Motors Central. Inches.	Height Exclusive of Trolley. Inches.	Minimum Width. Inches.	Max. Gauge for Min. Width Inches.	Length Excluding Bumpers.	Weight. Pounds.
$4\frac{3}{6}$ C	29	20	30	38	24	35	29	10′ 8″	4,000
$4\frac{3}{10}$ C	34	24	40	46	32	41	35	11′ 4″	7,500
$4\frac{3}{10}$ C	40	28	40	50	34	48	42	11′ 6″	7,500
$4\frac{3}{15}$ C	41	28	44	52	34	49	43	11′ 10″	10,000
$4\frac{3}{25}$ C	42	30	44	54	36	50	44	12′ 0″	15,000
$4\frac{3}{35}$ C	48	30	48	56	38	56	50	12′ 0″	20,000
$4\frac{3}{50}$ C	49	30	48	56	38	57	51	12′ 0″	26,000

TABLE IV.

JEFFREY ELECTRIC LOCOMOTIVES.

Type.	Class.	Drawbar Pull. Pounds.	Speed in Miles per Hour.	Number of Motors.	H. P. of each Motor.	Weight of Locomotive. Pounds.	Minimum Gauge. Inches.	Min. Gauge with Outside Wheels. Inches.	Width over all with Inside Wheels. Minimum Gauge. Inches.	Width over all with Outside Wheels. Minimum Gauge. Inches.	Height over all Excluding Trolley. Inches.	Length over all Excluding Bumpers.	Wheel-Base. Inches.	Diam. of Wheels. Inches.	Lightest Steel Rail To Be Used. Pounds.
S M	10	500	6 to 10	1	10	4,000	22	34	40	40	36	7′ 4″	30	24	8
"	20	1,000	"	1	20	8,000	36	48	55	55	39	7′ 9″	35	28	12
D M	20	1,000	"	2	10	8,000	18	30	37	36	36	9′ 3″	36	24	12
"	30	1,500	"	2	20	12,000	28½	45½	48½	51½	39	9′ 4″	40	28	16
"	40	2,000	"	2	25	14,000	28½	45½	48½	51½	39	9′ 4″	40	28	20
"	50	2,500	"	2	30	16,000	36	53	56	59	39	9′ 4″	40	28	25
"	60	3,000	"	2	35	18,000	36	53	56	59	39	9′ 4″	40	28	30
"	70	3,500	"	2	40	20,000	36	53	56	59	39	9′ 4″	40	28	30
"	100	4,500	"	2	50	24,000	40	57	60	63	43½	10′ 10″	40	28	40
T M	110	5,500	"	3	35	30,000	39	53	59	59	46	11′ 8″	62	28	40

motors. Up to the present time no system has been devised to utilize the alternating current to advantage. Electric mine locomotives are now made in sizes ranging from 4,000 pounds in weight with a drawbar pull of 500 pounds and running at a speed of 6 to 10 miles per hour, to 30,000 pounds in weight, 5,500 pounds drawbar pull. They are made in two forms, with outside and inside wheels; that is, the wheels are located inside the heavy cast-iron frame in one case, outside in the other. The minimum gauge is 18 inches, but tracks of this width are not to be recommended.

Outside dimensions range from 34 inches up. The preceding tables give the prevailing dimensions.

48. Effect of Grade Upon Capacity.—In modern steam-railway practice, a ton weight of train can be hauled

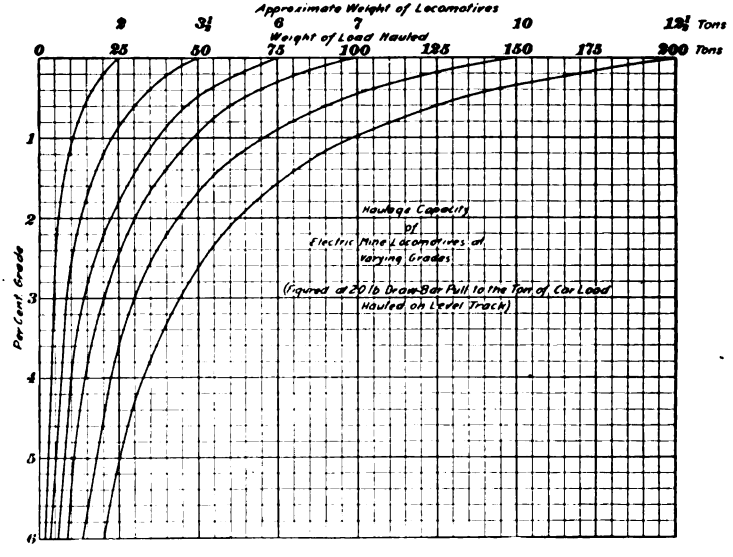

FIG. 13.

at 20 miles an hour over 80 to 100 pound rails with good roadbed for every 3½ pounds of drawbar pull exerted by the locomotive. With old-style light rails used twenty years

ago on the large railroads, a drawbar pull of from 6 to 8 pounds per ton was required. In mine haulage, at least 20 pounds must be figured on, and with careless construction and badly oiled and adjusted car axles, this will run to 75 pounds and over. Attention is called to the diagram, Fig. 13, showing the rapidly decreasing capacity of locomotives with increase of grade. This is figured on the basis of 20 pounds drawbar pull to the ton, on level track, which can only be accomplished with rolling stock in good condition.

49. Curves offer a large increase of resistance to the locomotive and cars, and consequently they very rapidly decrease the hauling capacity with the shortening of the radius. Of course, the combination of grade and curve will effect the economic operation of the entire road. Under any circumstances, labor expended in keeping the track and journal-bearings in the best of condition will be amply repaid by the greater efficiency and capacity secured.

ADVANTAGE OF HEAVY RAILS.

50. In locomotive mine haulage, too much stress can not be laid upon the necessity of having the rails of sufficient size and weight so that they will not give under the weight of the locomotive and cars; also, for permanent working, the wisdom of having the best possible track construction.

The running of a locomotive or of heavily loaded cars with flat wheels over light rails will often effect a permanent set in the rail which will greatly increase the frictional loss and add to the wear and tear on rolling stock.

The following table gives the minimum weight of steel **T** rails admissible for the different weights of locomotives. These figures are the minimum allowable, and greater economy in operation is effected by a liberal increase in these weights.

TABLE V.

Tons.	Pounds per Yard.
4	10
5	16
7½	20
10	25
13	30

EXAMPLES OF ELECTRIC LOCOMOTIVES.

51. Fig. 14 shows an electric locomotive made by the General Electric Company. It is of 40 horsepower and has a drawbar pull of 1,500 pounds. The track upon which this machine runs is made of 30-pound rails tied together with heavy fish-plates and laid on 6-inch square ties. The trolley-pole, which is held against the trolley-wire through all its variations of height by means of a spring, is placed to one side in order to have the overhead wire near the side of the entry. This form of trolley-pole does not need to be changed in position in order to run the locomotive either way. The controller is of the street-car type, and sufficient resistance is provided to prevent damage on starting the load. A magnetic blowout is used to avoid serious arcing at the contacts.

There are two motors, one for each pair of drivers. They have single-reduction gearing, and each is suspended by two bearings on the axle, which are kept well lubricated, and by an attachment to the front of the frame, which permits a slight lateral and endwise movement in case the main frame moves with respect to the axles. With this method of suspending the motors, one end of each supporting frame is practically suspended on springs, for it is attached to the main frame which rests upon helical springs placed upon the journal boxes, and the other end rests upon the axles and keeps

the pinion on the armature shaft always in perfect gear with the spur-wheel on the driver shaft, no matter how much the front end of the frame supporting the motor may be moved up and down while the locomotive is running. The frame is made of very heavy cast-iron side and end pieces for the purpose of obtaining great weight in order that the locomotive will have sufficient adhesion to the rails. The journal boxes are provided with bronze bearings and oil-wells for

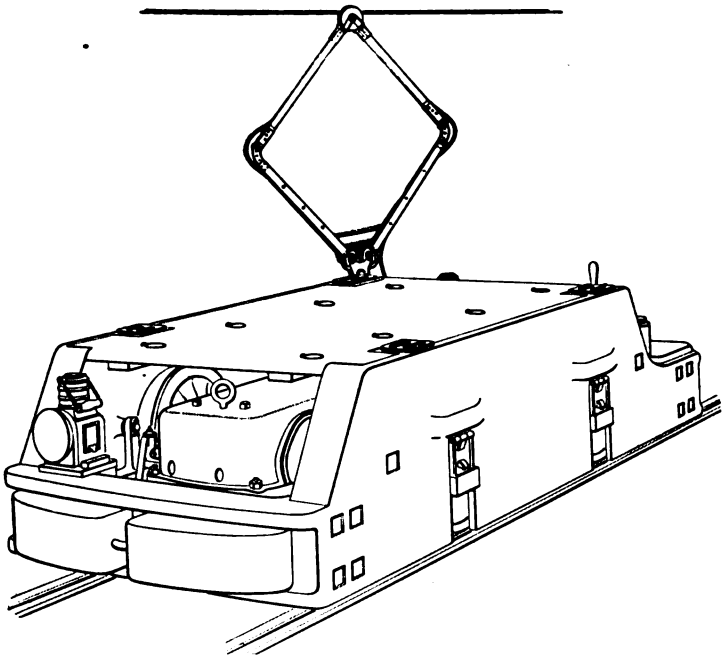

FIG. 14.

holding the saturated cotton waste. The massive frame is supported on helical springs resting upon the journal boxes. The use of the springs is to relieve the machine and rails from destructive shocks, and consequently prevent much wear and tear to both. This locomotive, in general with other types, is provided with a headlight, sand boxes, and a good brake. The speed varies from 6 to 10 miles per hour, depending upon the weight of the load and the grades.

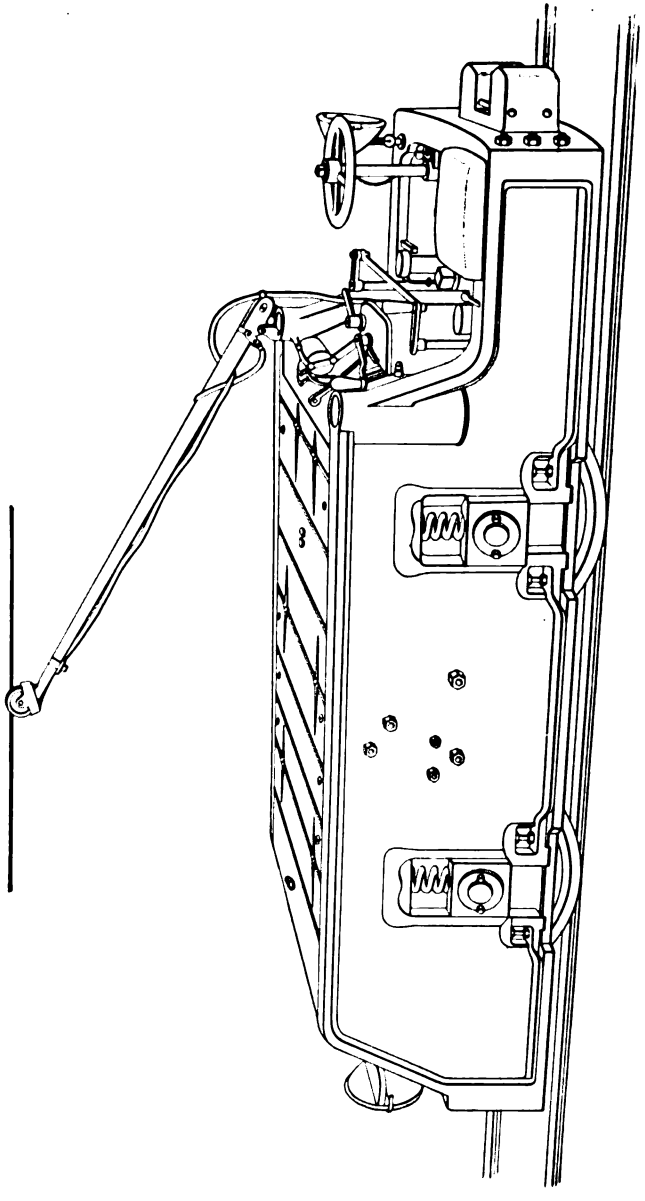

FIG. 15.

52. Fig. 15 shows an electric mine locomotive built by the Baldwin-Westinghouse Electric and Manufacturing Company. They are built in sizes from 20 to 150 horse-power, to run at an average speed of 8 miles per hour. They vary in weight from 7,000 to 34,000 pounds.

53. Mine locomotives are also manufactured so arranged that the operator sits in the center of the frame between the two axles, being surrounded by the heavy casting, and thus protected from injury in case of a collision with anything standing on the track. This style of locomotive is manufactured quite extensively by the Jeffrey Manufacturing Company, of Columbus, Ohio.

54. Mine locomotives have generally been made with two pairs of wheels, with a motor mounted on each of the two axles. A recent type, however, has six wheels, each pair with its separate motor, attached by single-reduction gearing. It is claimed that in this design the weight is distributed better over the track, causing less strain to it, and that the additional pair of drivers gives a largely increased traction. To enable this six-wheel locomotive, with its longer wheel-base, to operate on short-radius curves, the center pair of wheels are made without flanges, that is, with smooth face.

ELECTRIC PUMPING, SIGNALING, AND LIGHTING.

PUMPING.

1. The **drainage of mines** is one of the most difficult problems in mining operations. Even if not encountered at the start, water-bearing ground is likely to be met with as the work progresses. The pumping plant should always have a large reserve capacity, since the extension of operations is likely to bring with it a larger amount of water to be handled. Where other mines have been operated in the neighborhood to greater depth, some light may be thrown on the probable requirements. Whether the water should be collected in the lowest level or pumped from each level separately depends on the question whether economy or simplicity is the main object, and this may be decided by the amount of flow.

2. Conditions.—The operation of a shaft mine in which water collects depends upon the ability to keep the working parts free from the accumulation of any large amount of water, and the pumps should be constructed and arranged so as to offer the smallest possible chance of failure. They should be capable of running a long time without requiring packing or repair, and the sinking-pumps and those located in the lowest level should be capable of running under water. Where acid water is encountered or where there is much grit in the water, the pump should be capable of handling it without too rapid wear.

The operation of pumps is influenced by many conditions, such as the length and size of the suction-pipe, the number

of angles or turns in the pipe, the barometric pressure, temperature of the water, and altitude at which plant is located. The smoothness of the inside of the pipe and the diameter will also greatly affect the capacity and efficiency.

3. Comparison of Systems of Pumping. — The various styles of pumps and the arrangement of parts have been quite fully described in *Hydromechanics and Pumping*. The advantages of inside and outside packing, of direct-acting and fly-wheel pumps, and other facts regarding pumping machinery are there thoroughly treated. For the present we have to deal with electric pumps only; but it may not be amiss to state under what conditions the electric system is superior to the other systems. If there is but a limited amount of pumping to be done, it is not advisable to install any very expensive plant, as the interest on the cost might exceed the operating expense, and hence for such cases the water may be removed by means of water buckets, water cars, or pumps driven by steam or compressed air.

4. Steam Consumption of Steam-Pumps. — The duty of steam-pumps is approximately as follows: For small sizes, the consumption of steam is from 130 pounds to 200 pounds per horsepower per hour when operating in the workings of a mine at some distance from the boiler. For larger sizes of simple steam-pumps, the consumption is from 80 pounds to 130 pounds of steam per horsepower per hour. Compound condensing pumps, such as are commonly employed at stations in mines, consume from 40 pounds to 70 pounds of steam per horsepower per hour, while triple-expansion, condensing, high-class pumping-engines consume from 24 pounds to 26 pounds of steam per horsepower per hour. From these figures, it will be seen that, especially in the case of dipping pumps, which throw water to the main sump of a mine, the steam consumption is very great indeed.

5. Steam Consumption of Electric Pumps.—The duty of electrically driven pumps may be taken as follows: When a compound condensing engine is employed upon the surface operating electric pumps underground, the steam

consumption per horsepower per hour for the smaller sizes would be about 40 pounds per horsepower per hour, for medium-sized electric pumps about 30 pounds per horsepower per hour, and for larger sizes from 20 to 30 pounds per horsepower per hour. It will be seen from these figures that for pumping from isolated portions of the mine, electric pumps are much more efficient than steam-pumps.

6. Advantages of Electric Pumping. — When steam-pumps are employed underground, the pipes are very objectionable in the mine, owing to the heat which they impart to the workings. It is also difficult to dispose of the exhaust-steam, and the entire system is liable to injuries. In case of accident, as, for instance, the sudden breaking into the mine of a considerable flow of water, it is difficult to assemble the pumps or rearrange them so as to meet the new conditions, on account of the fact that it takes some time to couple up the necessary steam or air pipes. The objections in regard to heat do not apply to compressed-air pumps, but the objections in regard to flexibility of system apply equally. With electric pumps, the system is always semiportable, owing to the fact that the conductors can be strung easily and quickly and the pump moved with ease and rapidity. Then, too, when either steam or compressed air is employed, there is a great loss in the transmission line, owing to the fact that the air can not, as a rule, be reheated previous to use and that there is a great condensation in the steam line. In the case of electric pumping, the power can be furnished by a generator directly connected to an engine on the surface, thus affording the most efficient power-generation plant possible. If the mine contains many small pumps, the total efficiency of the system when driven by electricity will be very much above that of a mine provided with a high-class pumping-engine at the foot of the shaft and several compressed-air or steam-driven pumps throughout the workings. Another advantage is that the electrically driven pumps need very little attention, it being possible to place them in charge of some one who simply visits them

occasionally to see if they are working properly and to oil them. In mines where electricity is used for lighting, electric traction, or other power purposes, the pumping system fits in to the electric system already installed, and hence the whole may form a very efficient arrangement. One very important point in connection with electric pumping is that electric motors can be arranged to run at a uniform speed through a considerable range of load, so that if the pump were to work on air at times it would not result in any serious damage to the machinery; while if this occurs with a direct-connected steam-pump, there is danger of serious hammering or breaking of the pump, owing to the fact that the ram or piston jumps forwards on account of the air and strikes a destructive blow upon the water. This point is very important in the case of pumps placed in isolated portions of the mine to throw water to the main sump, as these pumps are frequently left to take care of themselves for a whole day at a time.

7. Centrifugal Pumps.—Centrifugal pumps may be driven by electricity, but they are only suitable for short lifts, the maximum efficiency being attained for a lift of approximately 17 feet. Another disadvantage of the centrifugal pump lies in the fact that it is only efficient when driven at the speed for which it is designed to work and when operating against the head for which it is designed, and any change of speed or head reduces the efficiency very rapidly. One advantage of the centrifugal pump is that it can safely pass gritty water or even small stones without damage.

8. General Construction and Form of Packing Employed.—Electricity may be used to operate either piston or plunger pumps, but for mine work piston-pumps are not efficient and are rarely used except in isolated cases for dipping from stopes which are below the general drainage level of the mine, the objection to the piston-pumps being the rapid wear and consequent leakage from one side of the piston to the other. Ordinarily, electric pumps are

of the plunger type having outside packing, and may be arranged as duplex or triplex pumps, i. e., two or three cylinders placed side by side and so arranged that their cranks stand at angles of 90° for the duplex and 120° for the triplex. One advantage claimed for the steam and compressed-air pumps is that with their use the reciprocating motion can be obtained without the intervention of gearing, which is necessary in all electric pumps; but the loss due to this cause is much less than the loss in the steam or air cylinder due to the large amount of clearance in all pumps using these mediums which are not provided with fly-wheels.

9. Gearing.—The rotative motion of the motor is transformed into a reciprocating motion of the pump by means of a series of gears, this being necessary on account of the fact that efficient motors can not be manufactured which can be run at a sufficiently slow speed so that they may be attached to the crank-shaft of the pump. The reciprocating motion may be obtained by either single or double reduction gearing. In the former case, a pinion is attached to the armature of the motor, which engages a large gear on the crank-shaft. The latter case is illustrated by Fig. 1, and in this case a pinion on the armature shaft drives the large gear *c* upon the shaft *a*. The gear *b* is also placed on the shaft *a* and drives the large gear *d* upon the crank-shaft. In the double-reduction gearing, a high-speed motor is employed, and an efficiency of from 65% to 70% of the power delivered to the electric motor is obtained in the horsepower output of the water. With the single-reduction gearing, an efficiency of from 70% to 75% can be obtained for lifts of over 300 feet, below which height the efficiency drops very rapidly, becoming 60% or less for 100 feet. Of course the water is thrown from the mine to the surface at a less expense per gallon from the shallow opening than from the deep opening, but, as has been stated, the total efficiency expressed in foot-pounds is less. The discovery of this fact has led more and more to the doing away with the station pumps in the shafts and

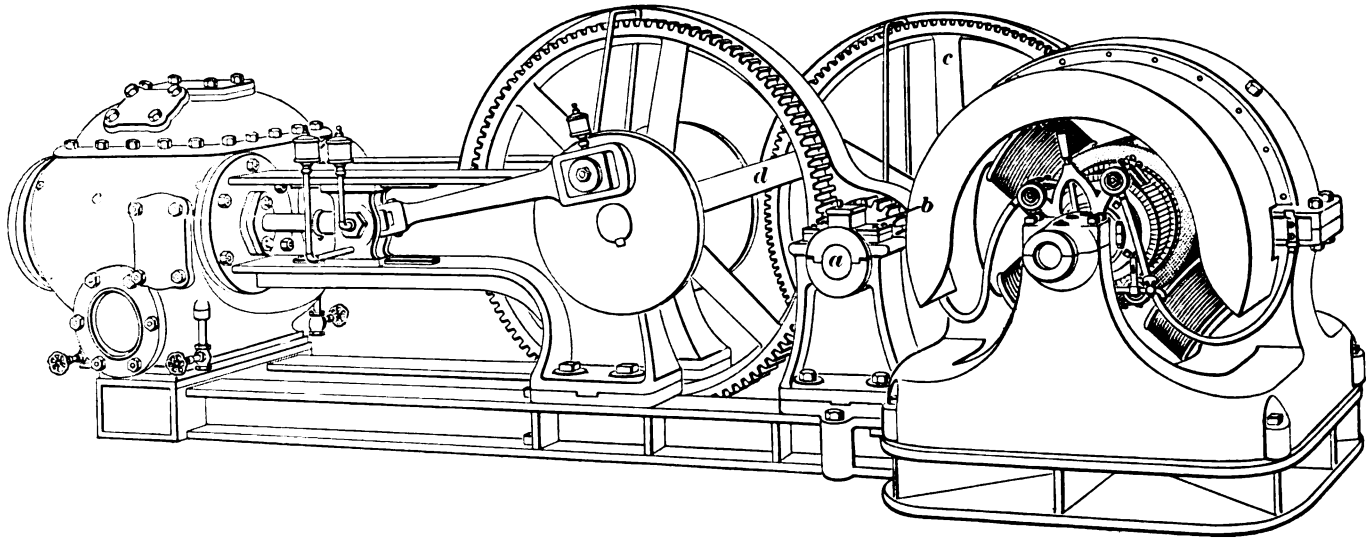

FIG. 1.

has been influential in increasing the practice of throwing the water to the surface at one lift, even when this is as great as 1,300 or 1,400 feet.

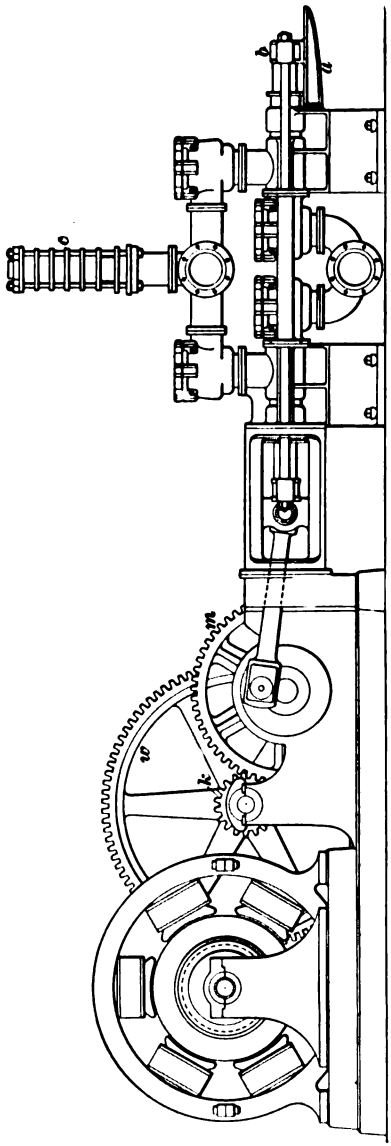

FIG. 2.

10. The pump shown in Fig. 1 is a Knowles double-reduction pump driven by a 4-pole direct-current motor, which is mounted upon an extension of the pump bed-plate, as shown at the right of the drawing. At the left of the drawing, cylinders *e* are shown. There are two of these cylinders, arranged with their cranks at 90°, both taking water from a common suction and discharging into a common discharge. This pump is fitted with inside-packed pistons, and hence not suited for gritty waters, though it may be somewhat cheaper than the plunger type.

11. Triplex Outside-Packed Pump.—Fig. 2 illustrates a mine pump manufactured by the Janesville Iron Works Company, having a large 6-pole motor mounted upon a bed-plate, as shown to the left of the illustration. This motor

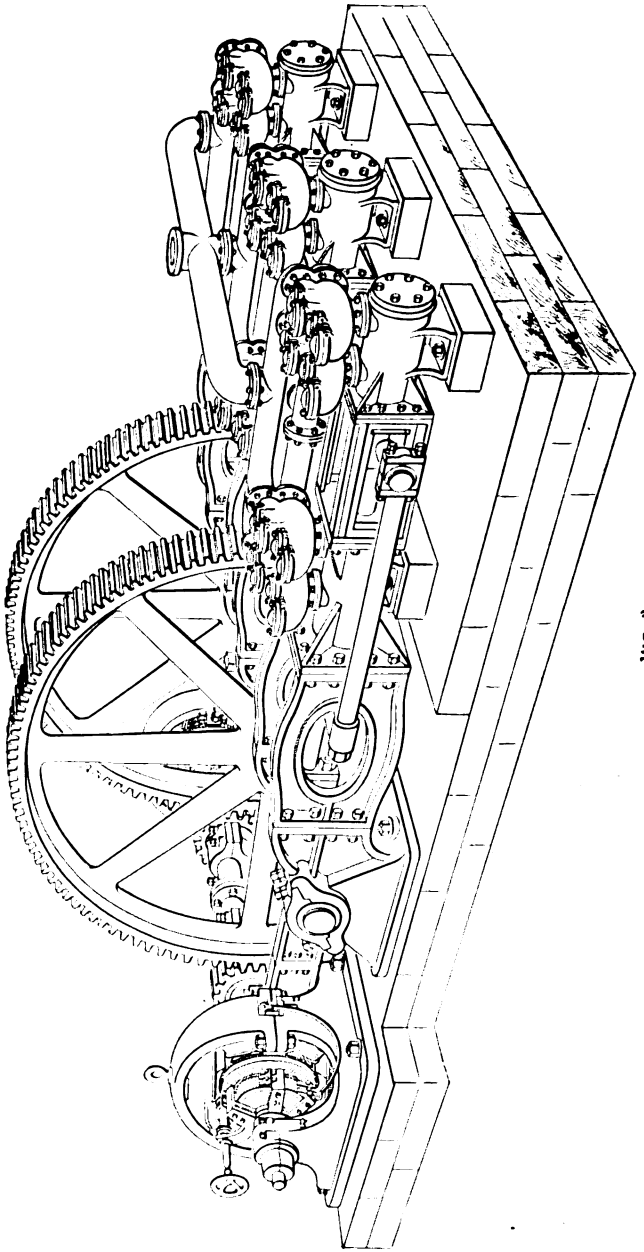

FIG. 3.

has a pinion upon its armature shaft which engages the large gear-wheel w upon the same shaft with the pinion k. The pinion k drives the gear m upon the crank-shaft of the pump. There are three cranks, placed at an angle of 120°, and the pump has six single-acting, outside-packed plungers, three at each end. The cross-heads for working the back plungers operate upon tail supports a, as shown at b. These cross-heads b are driven by means of parallel rods, which pass from the main cross-heads to the rear cross-heads on each side of the pump frame. This pump is intended for lifting 1,200 gallons per minute to a height of 1,100 feet. No air-cylinder is employed, on account of the fact that the large number of diplacements causes a practically continuous flow; but to guard against accidents from the stoppage of the column pipe, spring relief-valves are placed as shown at c.

12. Center-Packed Pumps. — A slightly different form of triplex electric pump is illustrated by Fig. 3, which is a Worthington pump. The capacity of this pump is 1,000 gallons per minute against a head of 1,000 feet, requiring over 250 actual horsepower. The water end consists of six single-acting, outside-packed plungers arranged in pairs, so that the packing comes between the adjacent cylinder-heads in place of at the outside ends of the cylinder-heads. This makes the packing a little harder to inspect than when it is placed at the outer ends of the cylinders, but at the same time does away with the tail rods and tail-rod supports, thus simplifying the machine. Both plungers are driven from the ends of the parallel rods, and each plunger really acts as a tail rod to support the other, thus doing away with the necessity of any guides between the adjacent cylinder-heads. The motive power is furnished by two electric motors coupled directly to the countershaft and driving the pump through a double set of single-reduction gears. The cranks operating the cross-heads and plungers are set at an angle of 120°.

13. Triplex Pump Without Tail-Rod Supports. —A design of pump intended for comparatively small

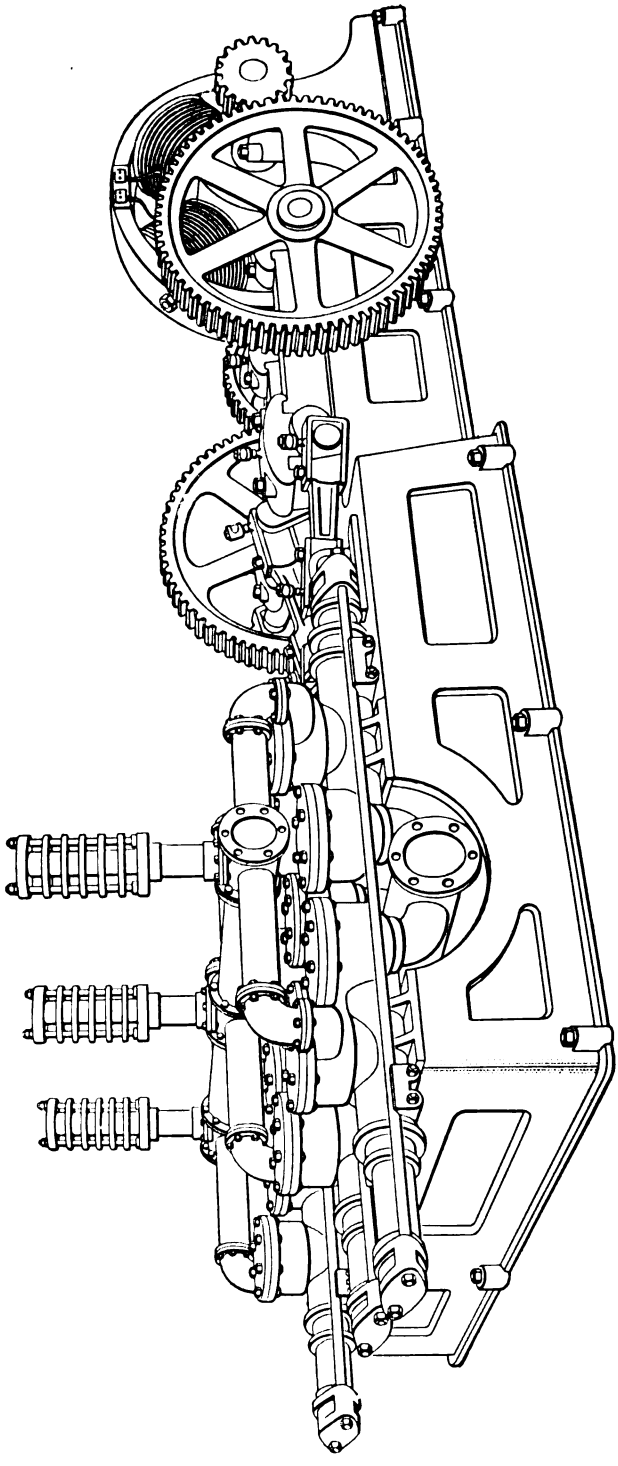

FIG. 4.

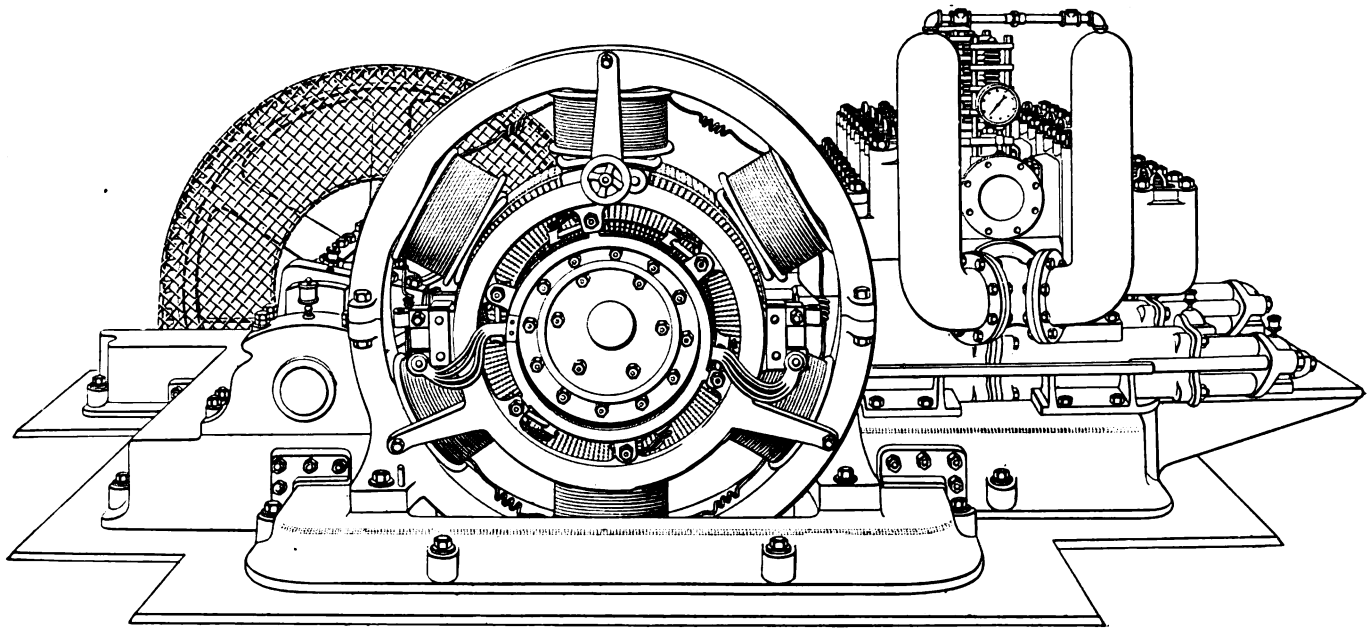

FIG. 5.

installations is shown in Fig. 4. Pumps of this style are built having a capacity ranging from 300 to 3,000 gallons against heads up to 600 feet. Spring relief-valves are employed, as in the form shown in Fig. 2. The gearing is also similar to the form illustrated in Fig. 2, but it will be noticed that the rams are not provided with any cross-heads or tail-rod supports at the left of the illustration, the packing bushings being made very long and depended upon as guides. The parallel rods for transmitting motion from the front to the back rams are shown very plainly, one of them being shown for its entire length along the sides of the pump-cylinder.

14. Single-Reduction Geared Pump.—Fig. 5 illustrates a Knowles double-acting, outside-packed plunger-pump which is driven by the General Electric Company slow-speed motor and a single-reduction gearing. The capacity of this pump is 500 gallons per minute against a head of 650 feet. It will be noticed that this pump is provided with spring relief-valves and with tail-rod supports for the plungers. The gearing is also enclosed in a casing, so as to protect the pump runner from injury. The manner of placing the motor makes the arrangement very compact.

15. Partially Enclosed Sinking-Pump. — Fig. 6 shows an electric sinking-pump provided with a 20-horse-power enclosed induction motor *m*. As this type of motor has no commutator or brushes, it can be encased to keep out water, and therefore the pump can be worked under water as well as above it. The armature shaft and the starting lever *l* pass through stuffing-boxes. This pump is of the duplex, double-acting type, and the power is transferred from the motor to the pump by means of double-reduction spur-gears, the arrangement of which can easily be understood by referring to the figure. The pump is suspended in the shaft by a cable attached to the eye-bolts *a*, and fixed in place by the supporting shoulders *b*. The suction-pipe *s* leads to the sump and the discharge-pipe *d* to the top of the shaft, or, in the case of deep shafts, to a

force-pump placed at some point in the shaft. The three cables *c*, which are used to conduct the alternating current to the induction motor, are well insulated and also made waterproof. The air-chamber *h* makes the discharge more uniform and prevents shocks due to sudden changes in the velocity of the column of water in the discharge-pipe.

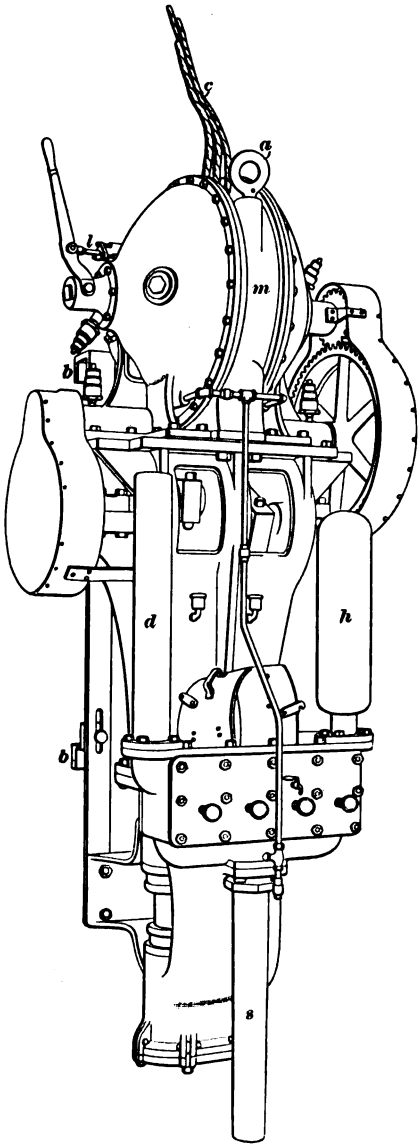

FIG. 6.

16. Enclosed Sinking-Pump.— Another electric mine sinking-pump is shown in Fig. 7. It is of the double-acting, outside-packed plunger type, and is protected against damage from water, moisture, and hard usage. The entire operating mechanism is enclosed in the case *c*, making it possible, with properly insulated cables, for the pump to work quite as well under water as above it. The motor, which is specially designed for the purpose, is further enclosed in a waterproof chamber, so that if anything should

happen to the outside casing *c*, the pump would still be capable of working when submerged. The only moving parts that are visible are portions of the piston *p* and plunger *q*, yet all wearing parts are easily accessible for repair. The pump is raised or lowered by a cable attached to the eye-bolt *e*, and it is fixed in place by engaging the supports *s* with suitable timbers in the shaft. An air-chamber *a* is placed on the water chest *w*, into which the pump discharges and out of which the water is forced to the surface

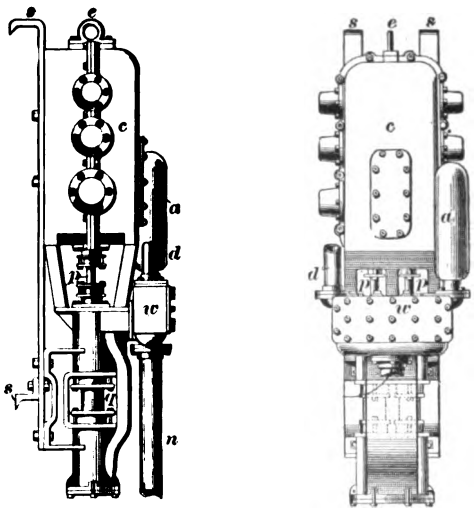

FIG. 7.

through the pipe *d*. The water is drawn from the sump at the bottom of the shaft through the suction-pipe *n*. One of these pumps with a 20-horsepower motor will discharge 250 gallons per minute at ordinary speed against a head of 100 feet. The plungers have a stroke of 8 inches and are 6½ inches in diameter, and the suction and discharge are 6 and 5 inches in diameter, respectively. The dimensions of the pump over all are $30'' \times 45'' \times 114''$, and its weight is 7,000 pounds.

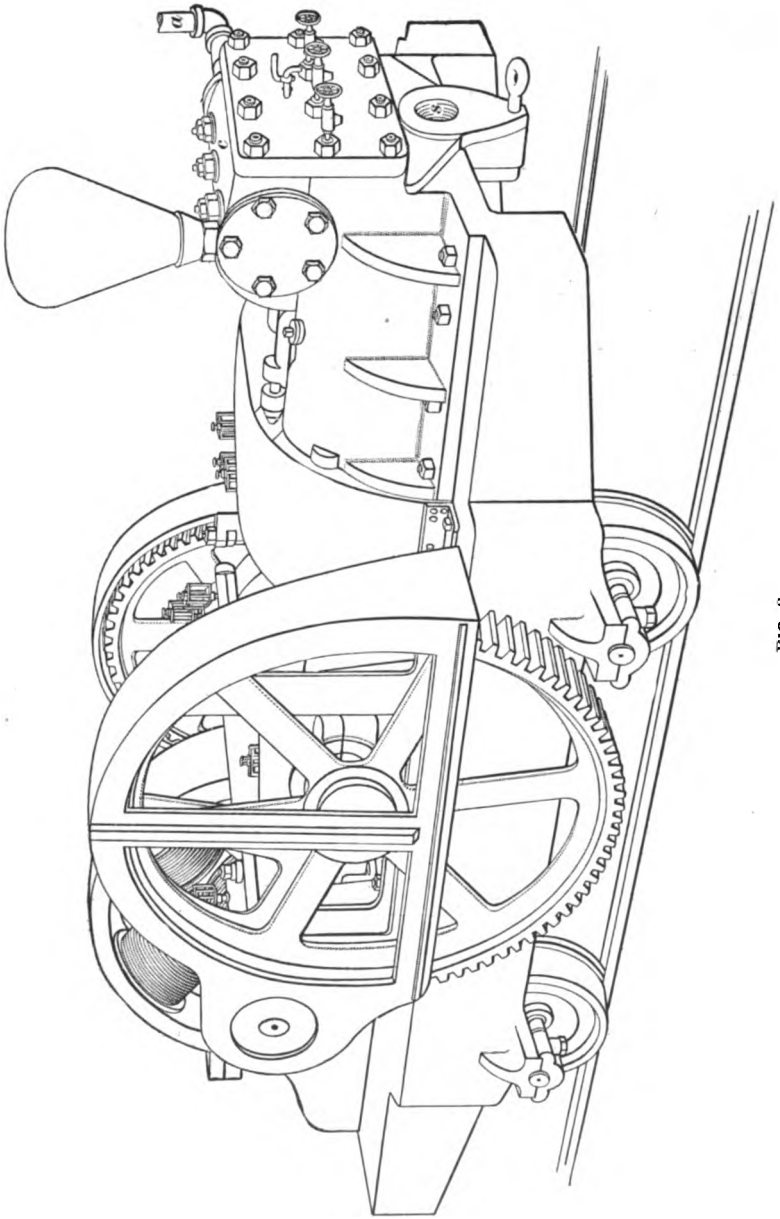

FIG. 8.

17. Portable Pump.—In some mines it is necessary to have auxiliary pumps to drain certain portions of the mine which are below the level of the main sump. For these local or auxiliary pumps, electric power is especially suitable. In driving wet dip headings, it is necessary to have some mechanical means of keeping the water away from the working-face. This is often accomplished by bailing the water into a water car and hauling it away, or by using hand-pumps. Both methods are expensive and often inefficient. With the use of electricity, however, such work can be done by the use of portable electric pumps, a horizontal triplex type of which is shown in Fig. 8. This pump is mounted on an iron truck, which can not be affected by moisture and which always maintains the accurate alinement of the pump and motor. The pump is made for a capacity of from 80 to 208 gallons per minute against a head of 300 feet. Such pumps require little attention, as they will not, if equipped with proper motors, run beyond a certain speed, even if working on air. Thus, if it is being used to drain the face of an entry passing a local dip, all the attention it will require will be an occasional oiling.

When in use, pumps of this type are generally switched off the main road into the neck of a room or breakthrough. The pipe leading to the sump at the working-face or to the body of water to be removed is connected to the pump at the opening *s* and the delivery-pipe to the opening at either side of the water chest *c*, as at *a*.

18. Precautions.—It is not wise to touch bare conductors carrying current at a pressure of over 110 volts, though serious harm is not apt to result from less than 300 volts if you are provided with gloves made of rubber or stand upon some dry insulating material. This fact should be remembered by persons traveling along headings where the conductors may be touched by some part of the body. A person wearing dry rubber boots or standing on dry wood may touch a single conductor through which a current is passing, without injury, provided he does not make contact

with the other side of the circuit with some exposed part of the body.

A dynamo or motor may become "charged" by injury to the wiring or by some loose coils touching the body of the machine. In such a case, it is exceedingly dangerous to touch any part of the machine, for it will discharge through the body into the earth. It is a wise precaution to connect the frames of pumps and other machines run by electricity to the earth, to prevent their inflicting possible injury to those handling them.

19. Selection of Pump.—In selecting the pump for any given duty, the first cost as well as the efficiency should be taken into account, as should also the location in which it is to be used. In some cases, especially in coal-mines, it is practically impossible to obtain headroom, and hence a low pump must be employed, while in some metal mines it is much easier to install a high machine than one that extends over considerable area. For this latter purpose, vertical duplex or triplex pumps driven by electric motors are frequently employed, especially where a comparatively small amount of water has to be handled. The simple fact that a pump is very efficient when it is one of a number driven by a carefully made generator of large capacity does not imply that it will be efficient for a small installation, and for this reason, if only one or two small pumps are required in the mine, it is generally much cheaper, both in first cost and in running expense, to install simply a boiler plant on the surface and use one or two steam-pumps underground, or to use compressed-air pumps and obtain air from the same system that drives the rock-drills. Then, too, the additional advantage of the improvement of the ventilation by the exhaust air from the pumps may have an important bearing upon the selection of compressed air as a motive power. As a general rule, it may be said that electric pumps should be used only where large installations are to be made, so that a number of small pumps or one or two large pumps may be supplied with power from a large generator driven by a very

efficient engine or where the current can be derived from generators driven by water-wheels. Another case in which electric pumps can be used to advantage is where the current can be obtained from some power company at an advantageous rate. This case really comes under the former, on account of the fact that a power company is able to furnish the power at a low figure, because it sells a great deal of it to its different customers, and hence large generators of high efficiency may be employed.

ELECTRIC SIGNALING IN MINES.

SIGNALING WITH BELLS.

20. A system of signaling is necessary in all mines having a shaft or slope or in which mechanical haulage is employed. The most primitive method used to any large extent is that of an iron or steel plate, which is struck by a hammer operated by a wire supported at intervals along the haulage road or in the shaft. The wire is pulled by a lever situated at either end of the haul or lift. This mechanical method, although in use in many mines today, is rapidly being replaced by electric systems of signaling, which are instantaneous and which best meet the various requirements of modern haulage and hoisting.

Electric signals are made by bells, lights, telephones, or a combination of these. The power for operating these signals is generally an electric battery consisting of a number of primary cells.

21. The different methods of placing the bells on the circuit are shown in Fig. 9. In Fig. 9 (*x*) three bells *a*, *b*, *c* are shown in series in the circuit. With this arrangement, it is impossible to get the makes and breaks at the different bells to properly synchronize, and the result is that the bells ring with a weak sound if all the bells are allowed to make and break the circuit. One method of overcoming this

difficulty is to cut out the make-and-break contact on all the bells but one, so that this one bell will be the only one interrupting the current in the circuit. The other bells will then be compelled to work in unison with the one doing the making and breaking of the circuit. Another method of overcoming this objection somewhat is by bridging the bells, so that a certain portion of the current will pass through them irrespective of the position of the hammers. This is shown in Fig. 9 (*y*), where the bells are put in parallel, and in order that each may ring with the same degree of sound,

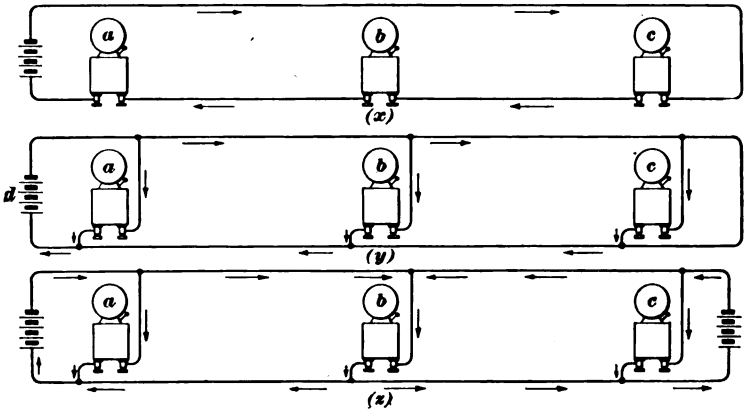

FIG. 9.

it is necessary that resistances should be put in series with each bell, except the one farthest away from the battery *d*. The resistances should be so arranged and proportioned as to cause the same current to flow through each bell. In the arrangement shown in Fig. 9 (*z*) there are two batteries forming two circuits that have a common path through the bell *b*. As a portion of the current from each battery passes through the bell *b*, which is the farthest away from the source of the power, it is seldom necessary to introduce resistance at the bells *a* and *c*.

22. It is well to have the bells placed in parallel for signaling in mines, as in this way the bells are not only

independent of each other, but can be supplied with more current from a given battery, and therefore are more reliable and work more satisfactorily than bells coupled up in series.

23. The method of obtaining the reciprocating motion of the bell hammer is shown in Fig. 10. A soft iron core is placed within a solenoid or coil of insulated wire, forming an electromagnet *s*, and an armature or piece of soft iron *a* is

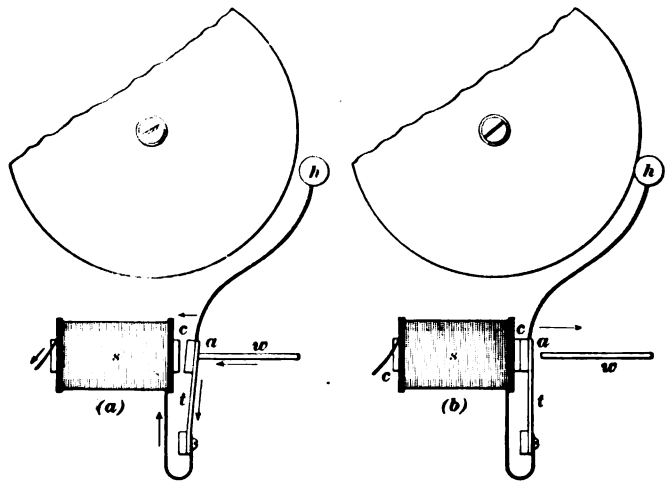

FIG. 10.

held between the end of the contact point *w* and the core *c* by means of a strip of steel, which acts as a spring. In (*a*) the current flows through the wire *w*, the spring *t*, thence into the solenoid *s*, and back to the battery. The core *c* becomes magnetized and attracts the armature to it. In doing so, however, the electric circuit is broken (*b*) and the core *c* loses its magnetism, allowing the spring to carry the armature *a* back till it rests against *w*, when magnetization recurs, and so on indefinitely, the hammer *h* striking the bell each time, and it is therefore caused to move in the same manner and strike the bell with a rapid succession of blows.

24. Fig. 11 shows an electric bell which has two electromagnets *m* for the purpose of giving the core the approximate shape of a horseshoe magnet, whereby greater strength is obtained. The wire handle of the hammer *h* is attached to the upper end of the armature *a*. The adjustable contact screw *s* is tipped with platinum in order to prevent oxidation and burning from sparks during the makes and breaks of the circuit. The battery terminals are connected to the bell by the contact screws *t*, and the mechanism is placed in a box to keep out the dust and dirt. The bell *b* and the hammer *h* which strikes it are, of course, not enclosed, and for this reason it is impossible to keep out dust entirely, consequently the box should be removed occasionally and the mechanism thoroughly cleaned. The bells shown in Figs. 10 and 11 are of the vibrating or continuous-ringing type; i. e., so long as the bell is connected to the battery by depressing the push-button it will continue to ring. For some purposes, it is desirable to use **single-stroke** bells, which will give only one ring when the push is depressed. All that is necessary to convert a vibrating bell into a single-stroke bell is to connect the terminals of the magnet coil directly to the binding-posts of the bell, so that the current does not have to pass through the armature and contact points. When this is done, the magnet holds the armature so long as the push remains depressed, and each time the push is pressed the bell gives one stroke, thus making it specially applicable for signaling purposes.

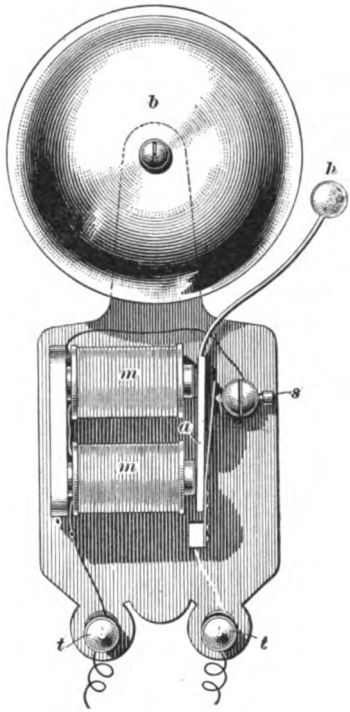

FIG. 11.

25. It is necessary to have circuit-closers, or **push-buttons,** as they are called, at different points in an electric-signal system. One form of push-button is illustrated in Fig. 12. The ends of the line-wire are brought up through a hole in the wooden base *a* and held under the screws on the brass contact springs *b*, *c*. The cap *d* when screwed in place holds the button *e*, which on being pressed down forces the two springs together and completes the circuit, causing the bell to ring. This type of push-button is operated by a single finger, and is not frequently employed for inside

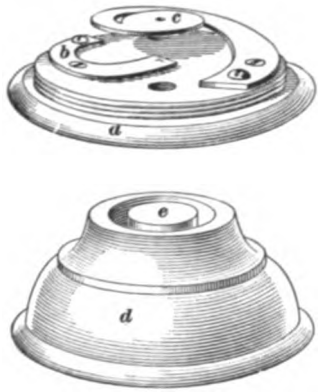

FIG. 12.

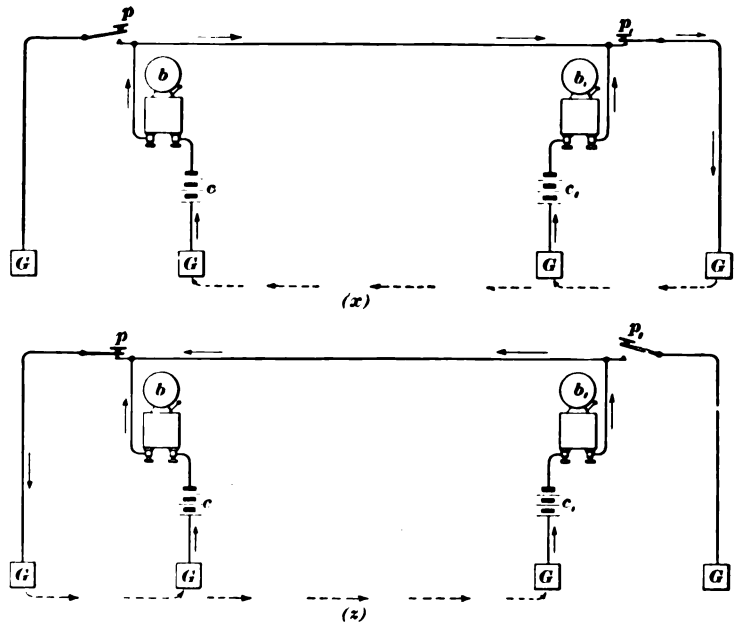

FIG. 13.

mine work. For this latter purpose, a larger type, which can be operated by the palm of the hand, is used.

26. Signal With Ground-Connection.—The construction of a circuit showing the relative positions of the batteries c, c_1, bells b, b_1, and push-buttons p, p_1 is shown in Fig. 13. The object of this arrangement is to allow the current from either battery to pass to the earth and have a complete circuit when either of the push-buttons is pressed down, while but one line-wire is used. The top view (x) shows the behavior of the current when the button p_1 is pressed down, and the bottom view (z) when the circuit is completed at the button p. The batteries should be connected with like poles to ground.

27. Signal Without Ground-Connection.—Where earth connections are poor, a return wire is used, as shown

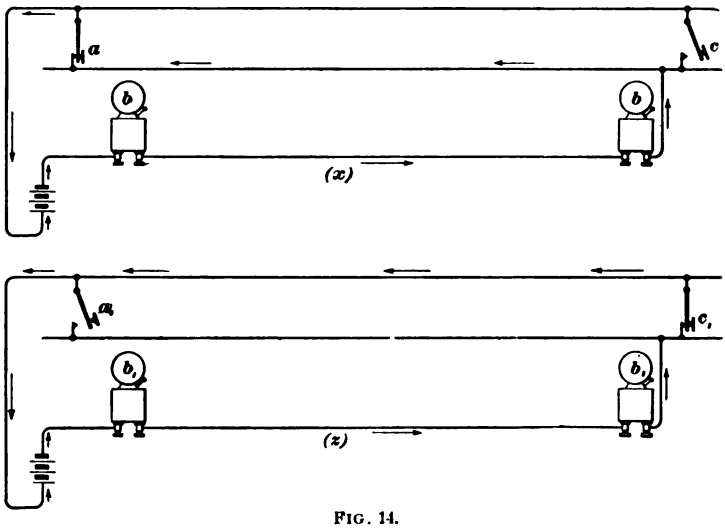

FIG. 14.

in Fig. 14. The bells b, b are in series, and in order to prevent both push-buttons from being on the same circuit, a third wire is necessary. In the top view (x) the button a is closed, leaving the top wire neutral, while in the bottom view (z) the button c is closed, leaving the center wire neutral. The object of having both bells ring when a signal is sent from either end is to assure the sender that everything is all right

when he presses the button and the bell next him rings. On the other hand, if the bell does not ring he knows the signal has not been sent and that something is wrong.

28. Signals for Haulage Roads.—On haulage roads it is necessary to provide a system of signaling by which the trip rider can have the trip of cars stopped or started at any point. Such a system is shown in Fig. 15. Here two batteries c, c_1 and four ground-connections G are used. With the exception of the top wire, this system is the same as that shown in Fig. 13, and signals from either end of the line are given in exactly the same manner. The two wires which run along the roadside are only 6 or 8 inches apart and parallel to each other. The trip rider carries a short piece of

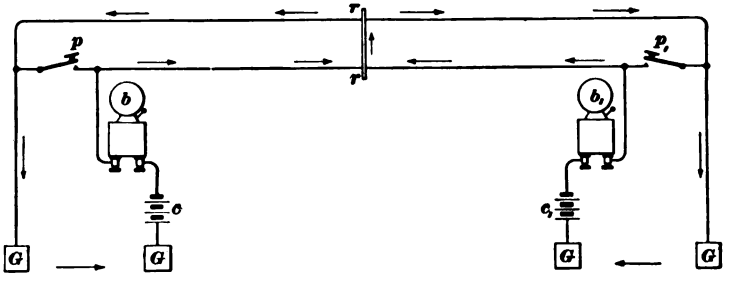

FIG. 15.

iron, which he places across the wires at any point where he desires to signal the engineer to either stop or start the trip. The iron $r\ r$ is shown in contact with the wires, and from the flow of the currents, which is indicated by the arrows, it can be seen that both bells b, b_1 will ring. With this arrangement, it is not only possible to signal to stop or start the trip from any point, but also to signal to either end of the road for assistance in case of accident. It often happens that the trip rider while on a car that has been derailed must signal to the engineer to stop the trip. This he quickly does by reaching out and striking the wires with the iron which he holds in his hand. Thus it is seen how necessary it is to have the wires within the reach of the trip rider while on the moving trip. Two rings are generally used to

start, and three to back up. Any other numbers may be used for other signals which may be found necessary for the safe and rapid operation of the haulage system in use.

29. The arrangement shown in Fig. 16 is the same as that shown in Fig. 15, except that the top wires are placed

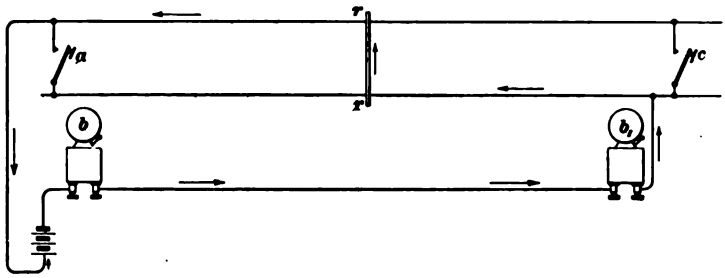

FIG. 16.

near and parallel to each other, so that contact can be made between them with the ringer or iron bar *r r*. This arrangement fulfils the same requirements as that shown in Fig. 15, but the bells are in series instead of being on independent circuits, and only one battery is used.

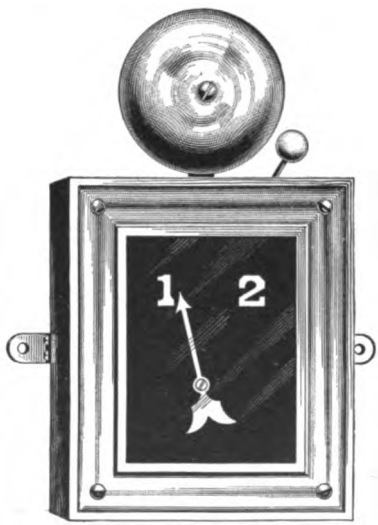

FIG. 17.

30. Where signals must be received from different parts of the mine, as, for instance, at the junction of several haulage roads where the engine is placed, the method of having a code for each road requires a great many rings, and is likely to confuse the engineer and cause accidents. Again, it is quite as unsatisfactory to have the same code for all the roads and bells that have different sounds, because it is difficult to construct bells whose sounds are so distinctively

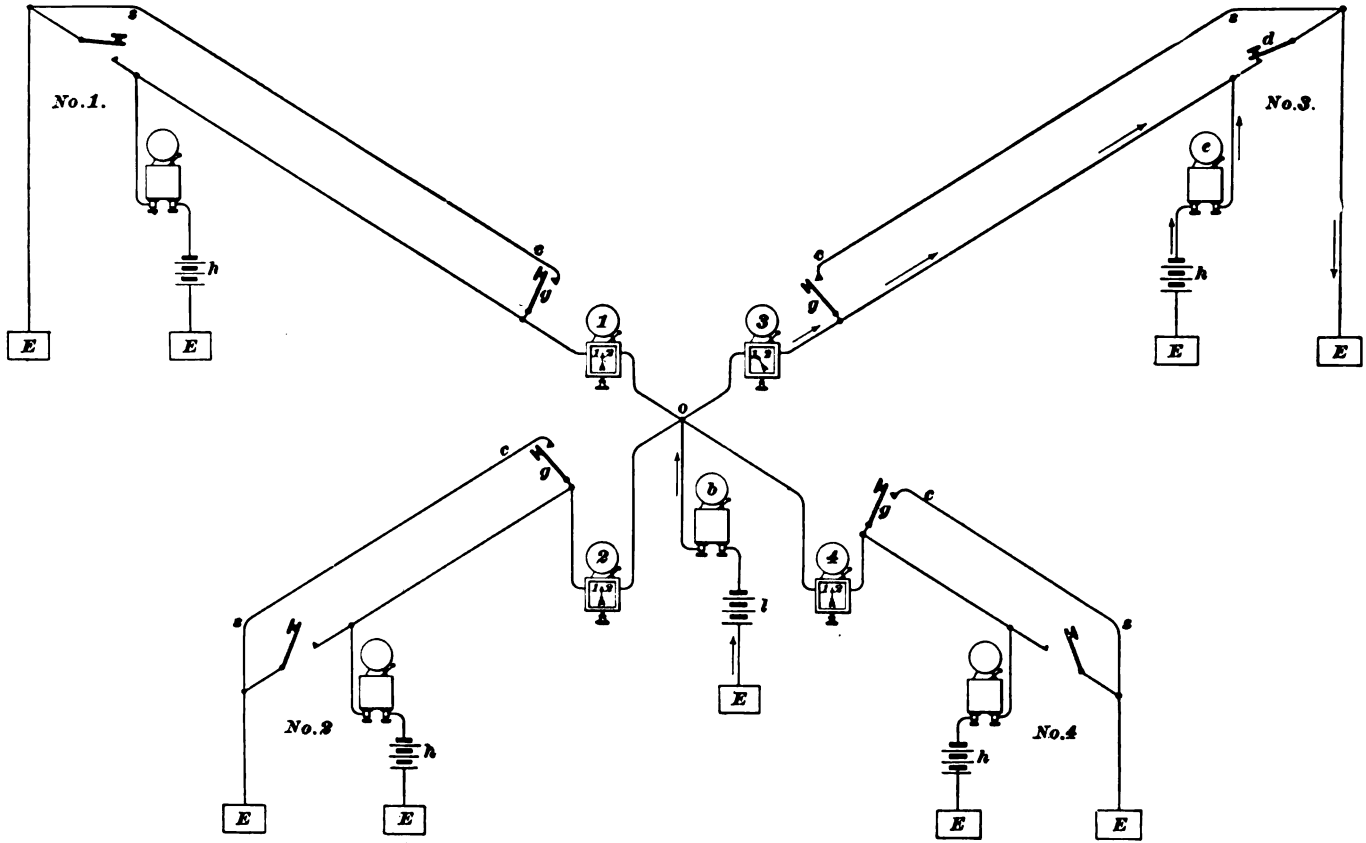

FIG. 18.

different that no confusion or mistake will happen. These difficulties are largely overcome by the use of a signal code and an annunciator, Fig. 17. This annunciator is provided with a bell, the particular one shown indicating two places only. Where a signal has been given, the engineer can see immediately from which haulage road it has been sent by the pointer on the annunciator.

31. Fig. 18 shows in principle the arrangement of a system of signaling at the junction of four haulage roads. It is designed to avoid confusion on the part of the engineer, and thereby prevent accident or delay. The positive wires from the batteries *h* and the annunciator battery *l* all unite at *o*, and each is connected to the operating mechanism of a pointer on the annunciator. By the use of batteries at the end of the haulage road, a bell can be rung when the push-button is closed. This insures the sender that the signal has been given to the engineer. The wire *c s* makes it possible for a signal to be given by the trip rider at any point on the haulage road.

The figure shows the condition which exists when the push-button *d* at the end of *No. 3* entry is closed. From the direction of the current, which is shown by the arrows, it will be seen that the bells *e* and *b* will both ring, and that the pointer *3* will be deflected, showing the engineer from which road the signal has been sent. The instant the current ceases the pointer assumes its vertical position. It is, however, often advisable to have the pointer remain in its deflected position, for the engineer may be engaged in oiling or repairing his engine and be unable to see the annunciator at the moment the bell rings. In this case, it is necessary to have a convenient mechanical or electric method of allowing the pointers to assume their position whenever the engineer has seen the annunciator and operated the releasing apparatus.

In case a double call is received from different entries at the same time, the pointer will indicate it, and in order that the engineer will be sure of the proper number of rings from

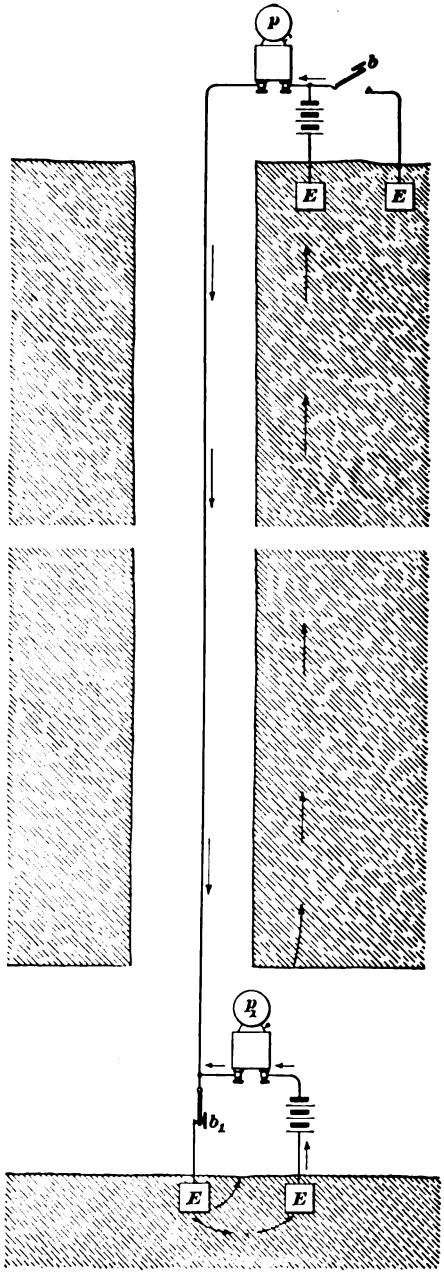

FIG. 19.

Digitized by Google

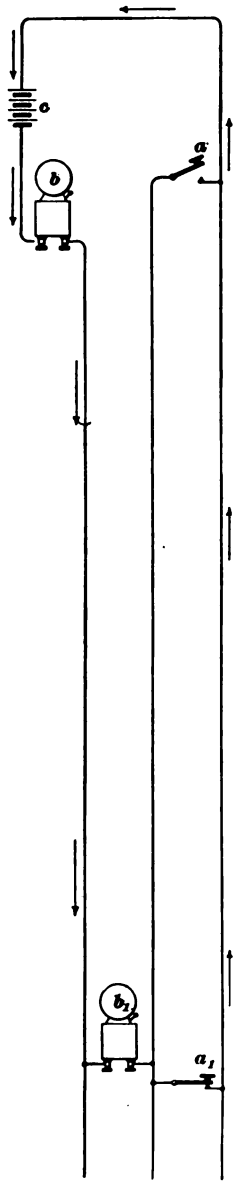

FIG. 20.

any one station, he must wait until he gets a complete signal in which but one pointer has been deflected. It is often necessary for the engineer to signal to the inside stations. This is accomplished by means of the push-buttons g which are placed on the different lines. It may be convenient to have the grades of the respective haulage roads roughly represented by broken lines on the annunciator. When this is done, each line is placed to one side of the corresponding pointer, so that the instant a signal is given the engineer can see the grades over which the trip must be hauled, and therefore be more likely to handle the engine in the best manner.

32. Signals in Shafts.—The method of signaling in shafts is quite similar to that used on haulage roads. Fig. 19 shows in principle the arrangement of a signaling system in a shaft. The positive wire passing down the shaft is well insulated and run through a small pipe for protection. The push-button b_1 is closed, and from the flow of the current it will be seen that both bells will ring. The operation of this arrangement can readily be understood from what has previously been said.

33. In order that the cage may be stopped at any point in the shaft where repairing of any kind is required, it is necessary to have a system of signaling from the cage to the engine room. There are a number of ways of

accomplishing this, but the usual method is that in which trolleys are used. Two wires pass from the battery down the shaft, and they are supported at intervals with ordinary hangers. A trolley runs on each, in a manner like that of a street-car or an electric locomotive trolley. In this way current can be carried to the bell or telephone on the cage and signals given to the engineer by a man in the moving cage.

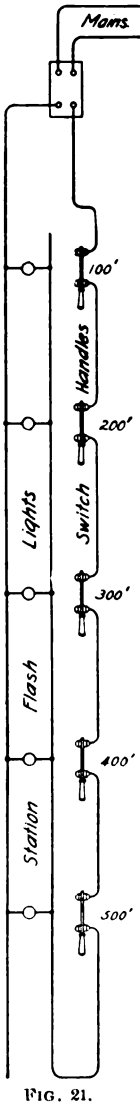

FIG. 21.

34. Fig. 20 shows another method of signaling in a shaft or slope. When signaling from intermediate points by this method, it is necessary to connect the middle wire and the wire a, a_1 by a ringer, precisely as is done in haulage systems. The bells b, b_1, placed at the top and bottom of the shaft, are in series and always ring, no matter where the signal may be given. But one battery c is used. The push-button a_1 is closed and the current is flowing in the outside wires, leaving, in this case, the center wire neutral. With this system, a telephone can not be used on the cage, nor is it an easy matter to send a signal from the cage when it is moving rapidly.

MISCELLANEOUS METHODS OF SIGNALING.

35. Signaling by Flash-Lights.— Fig. 21 shows a method of signaling by means of flash-lights, which is used in the Western States. It consists of a switch "cut in" to the main circuit at the different levels. When any switch is thrown out and in, a flash is produced in all the lamps on the circuit. If the cage is required at any level, the signal corresponding to that level can be given to the station tender, no matter what level he may be at, and he in turn will give the signal to the engineer.

This system is very simple and reliable. It has replaced largely the old-fashioned bell-rope and the electric bells and batteries which give considerable trouble in deep, wet shafts. If lights are inserted in the circuit at different parts of the mine, the signals will be flashed throughout the mine, and in case it is necessary to signal to the various parts of the mine that an accident has occurred, it can easily and quickly be done from any switch. This is usually done by giving the accident signal, and then following it by the signal of the level on which the accident has occurred.

36. Signal System With Telephones.—A system of signaling in which the telephone supplements the bells and push-buttons is shown in Fig. 22. A high-grade bridging telephone is used, because loose contact in any telephone on the circuit does not affect the working of the others, and any defect in contact can be readily located and quickly fixed. The bells are of the skeleton-frame type with pivoted armatures. They are wound for different resistances, depending upon the work they have to do. When the circuits are well insulated, the ordinary open-circuit carbon-cylinder battery is used, because it is quite strong and easily and cheaply recharged. For circuits poorly insulated on account of water and grounds, the Gordon, Edison-Lalande, or similar type of battery is employed, because it does not polarize when the line is badly grounded and is less expensive to operate under such conditions than the ordinary open-circuit battery. On leaky circuits the Gordon batteries have worked for nearly two years without recharging, while the carbon batteries on the same circuits had to be recharged about every ten days.

37. The figure illustrates the arrangement of the signals at seven landings in a shaft. Each landing has a separate call to the engine room, which rings a bell at the same time at the head of the shaft. There is a separate call between the engineer and the head tender at the head of the shaft. A telephone is placed in the engine room and one at each landing in the shaft. The wires

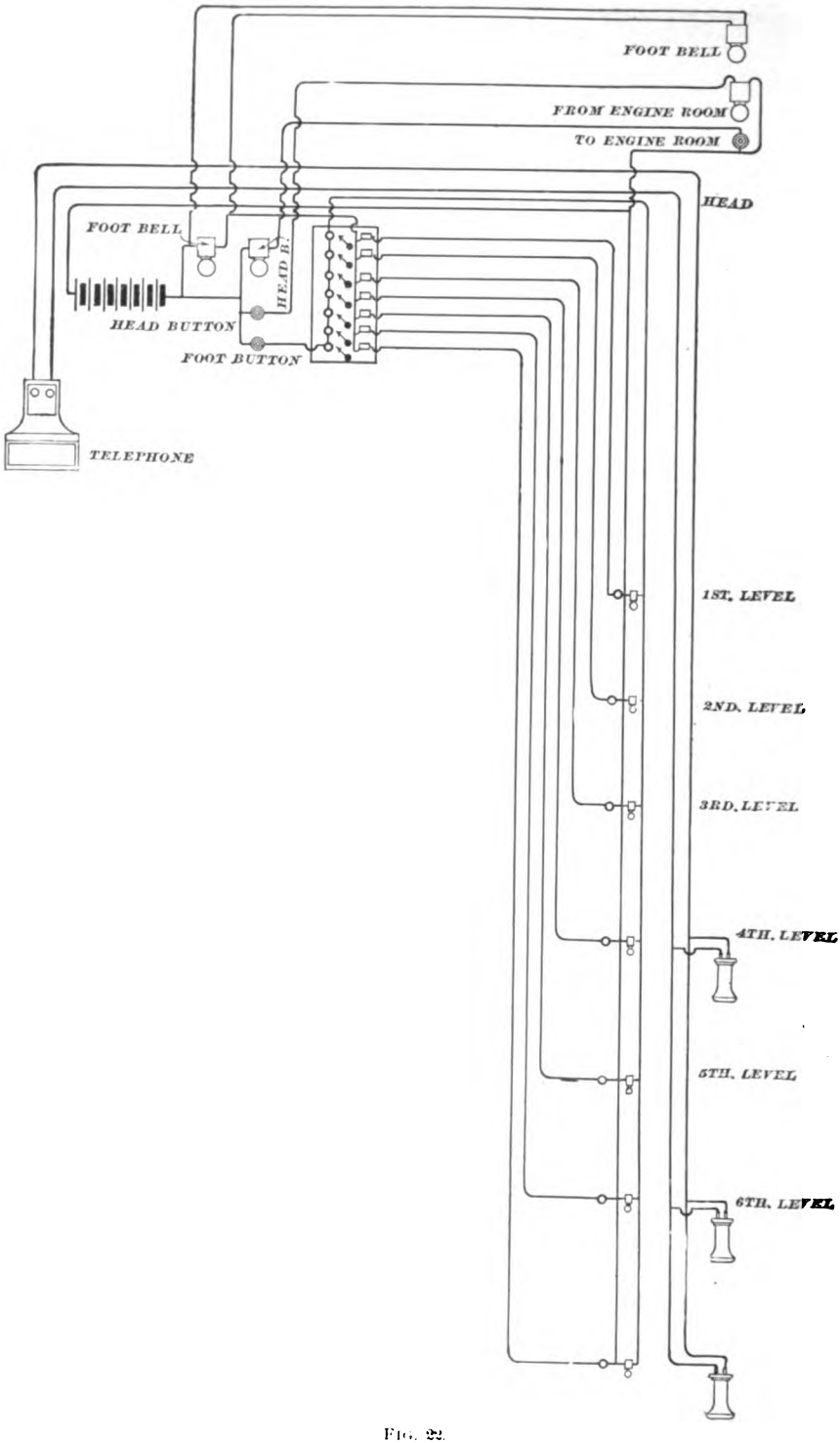
FOOT BELL
FROM ENGINE ROOM
TO ENGINE ROOM
HEAD
FOOT BELL
HEAD B.
HEAD BUTTON
FOOT BUTTON
TELEPHONE
1ST. LEVEL
2ND. LEVEL
3RD. LEVEL
4TH. LEVEL
5TH. LEVEL
6TH. LEVEL

FIG. 22.

from the engine room to the shaft head and to the landings in the shaft are arranged in cables containing one No. 14 copper wire and as many No. 18 copper wires as are required. Each wire is insulated with paper and the wires properly stranded into a cable, which is well soaked in paraffin, wrapped with cotton, and then covered with lead $\frac{3}{32}$ inch thick, to make it waterproof. A layer of jute soaked in asphalt is laid over the lead, and the whole covered with a layer of No. 10 galvanized-iron wire armoring. That portion of the cable leading from the head of the shaft to the engineer's platform is carried through a 2-inch iron pipe. The end of the pipe at the head of the shaft terminates in a heavy oak box, and here the wires of the cable are separated and conducted to their proper places.

38. The telephones in the mine are each placed in a large wooden box and located in a dry spot, generally about 15 feet from the shaft. The box has a hinged door on front, with a small opening in it, opposite the telephone bells, and covered with a wire screen, so that the foot tender can hear the bell with the door closed. The return bell is fastened to the outside of the telephone box, which acts as a sounding-board, and the wires are brought out through the wood at the binding-posts of the bell. By this method the only wires exposed are at the terminals of the bells and buttons, and these are thoroughly taped. Heavy rubber-covered wire is used to make the connections between the cables and the bells and buttons and telephones.

To facilitate repairs, the wires in each junction-box are each designated by a thin copper tag giving the name of the wire. The No. 14 wire in each cable is the main-battery wire, and may be readily picked out by its size. This large wire lowers the resistance of each circuit, and it is the common-battery wire for all the call and reply circuits. The circuits are arranged as shown in the figure.

The main-battery wire runs to the bottom of shaft, and from it the button wires are tapped off at each landing, the current returning from the button by a separate wire to the

annunciator in the engine room and onwards to the shaft bells, one being at the head of the shaft and the other at the annunciator.

The reply bells are connected by the main-battery wire in multiple to a common-return wire at the reply side of the annunciator.

Between the engineer and head tender there is a call-and-reply connection, as shown. The wires from the junction-box at the head of the shaft are arranged with the bells and buttons in the same way as for the other outlets.

39. The distinctive feature of this system is the annunciator, which indicates for 7 points that lie in a vertical line, and are named for the different veins they represent. Each point is located between two magnets, one wound for the call and the other for the reply from the engineer. The magnets in the reply circuit are connected in series, so that when the circuit is closed by the engineer, the current passes through all the magnets, throwing all the drops up to the "off" position and ringing all the reply bells on the line. The engineer can not throw up the drops except by ringing the reply bells, as the annunciator is completely enclosed.

All the bells are wound for 20 ohms resistance. The two bells in the engine room, besides being separated about 10 feet, are of entirely different sound, so that there is no possibility of any mistake about the rings. The bells at the head of the shaft are arranged in the same manner, one being the ordinary gong and the other a bell of the hand type.

The battery is located in a cupboard on the wall of the engine room, and the wires are carried from it to the rack in an iron pipe. It consists of 18 cells of a carbon-cylinder battery in series, and a space is left at the end of the box to receive the extra telephone wires that are used to connect the two shafts.

40. In the shaft, the foot tender has charge of all the inside bells, and no one is allowed to ring them without his consent. If he is working at a landing and any men wish

to go up or down from another landing, they are required to call upon the telephone, and when the footman is ready he goes to that landing and sends the men to their destination, always staying in charge of the signals.

Should any one ring from one landing while the footman is working at another, the engineer can tell immediately by the annunciator that it was not the footman, and can see just where the ring has come from.

The telephone is used, however, as it is more satisfactory and safer, and does not cause any confusion in the signals.

The button wires for the engineer are run out through a small iron pipe from the rack to a convenient point for the engineer, and on the ends of these is fastened a plate on which are placed the two push-buttons for the engineer's use.

41. Haulage Block Signal.—A good system of signaling on a haulage road, common to two or more roads and used by several locomotives, is shown in Fig. 23. A switch

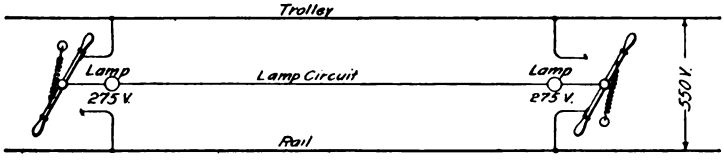

FIG. 23.

with a double-handle single-hinged lever is placed at either end of the road; one terminal of each switch is connected with the trolley-wire and the other with the rail, the center of the levers being connected by a wire, in which a lamp is inserted near each switch as shown. A spring is so attached to each lever that it will insure good contact for either position of the lever. Clear lights are used for clear tracks and darkness for occupied track. As one or the other of the ends of each lever is always in contact, a motorman approaching either end of the road can cut out the lamps by throwing the lever in the required direction to change the contact, and when he reaches the other end, he can change the contact again by throwing the lever of the other switch,

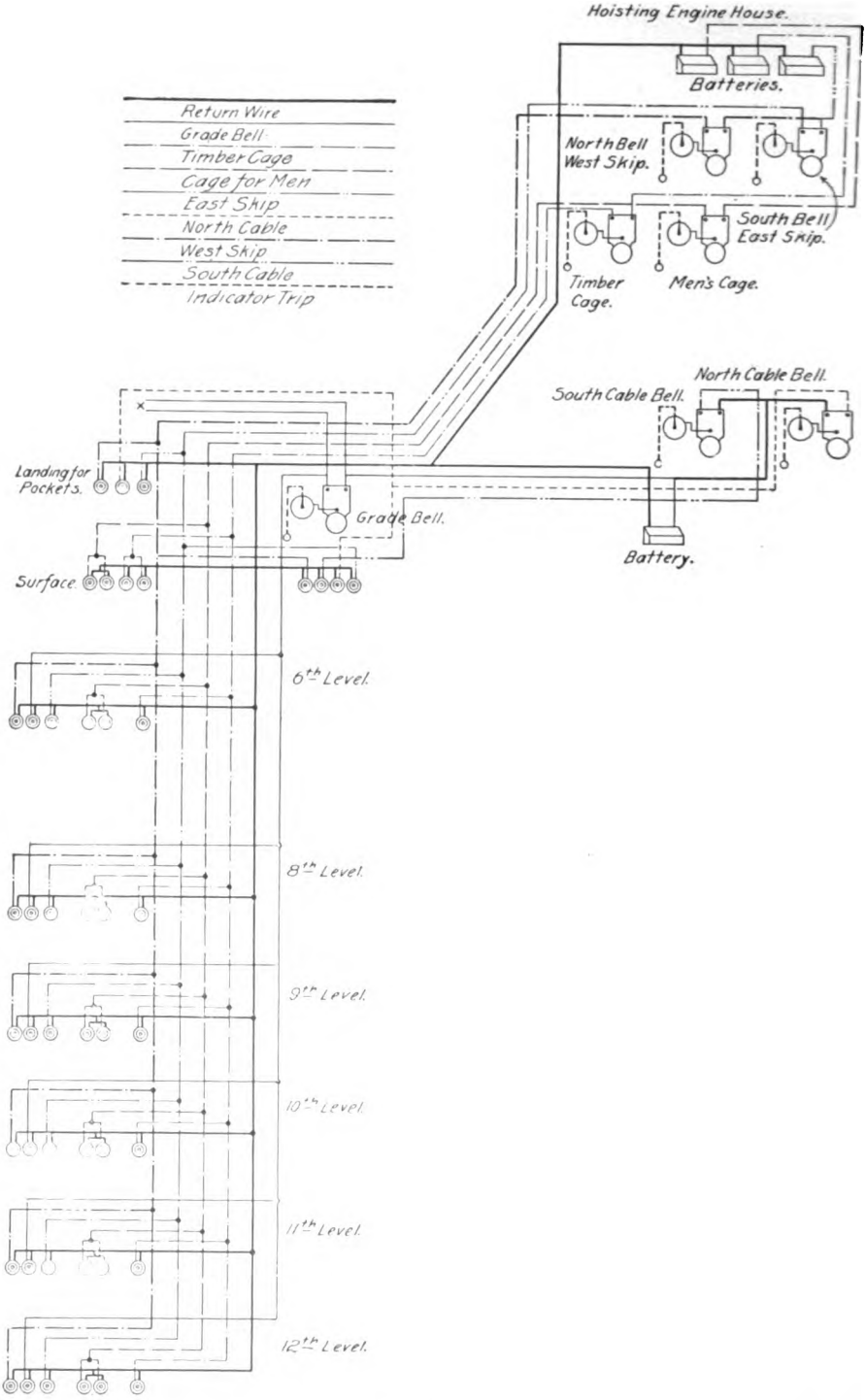
Hoisting Engine House.
Batteries.
Return Wire
Grade Bell
Timber Cage
Cage for Men
East Skip
North Cable
West Skip
South Cable
Indicator Trip
North Bell
West Skip.
South Bell
East Skip.
Timber
Cage.
Men's Cage.
North Cable Bell.
South Cable Bell.
Landing for
Pockets.
Grade Bell.
Battery.
Surface.
6th Level.
8th Level.
9th Level.
10th Level.
11th Level.
12th Level.

FIG. 24.

which cuts in the lamps again. The switches may be placed at any convenient place on the rib side or the roof, so that the motorman can operate the levers while the motor is going at full speed.

42. Special Shaft-Signal System.—As an example of wiring to cover the various requirements at a somewhat complicated shaft, Fig. 24 is given. The grade bell is intended for signaling the grade of ore to be hoisted, so as to facilitate the placing of it in its proper bin or pocket. The cable bells are intended for controlling the cables which operate the surface haulage plant at the shaft, while the other bells are employed in connection with the signals for the timber cage, the men's cage, and the ore skips. This system is in use at the West Vulcan mine in the Lake Superior region.

43. Six strands of wire are used in the shaft, as shown in Fig. 24. Five act as main wires and one as a return wire. The six wires are tied together every 5 feet, forming a cable. This is passed down through an iron pipe. The pipe is made tight by a tapered wooden plug, which is split and grooved to allow spaces for six wires. The plug is driven into the pipe and resin melted and run into the groove around the wires, sealing the wires in the pipe. To make sure that the wires will not draw through, a clamp is put on them above the plug. At each level the wires are brought out through a T in the pipe to connect with the buttons; then they are passed back through the T again and dropped to the next level below. After passing the wires back into the pipe, a plug similar to the one previously mentioned is inserted in the T and the wires sealed and clamped.

All connections are soldered, using the best blowpipe solder and powdered resin. After the connection is soldered, it is insulated with okonite tape and a heavy coat of Stockholm tar applied. Then a tight-fitting piece of rubber tubing about 4 inches long is slipped over the joint and bound at each end with a small copper wire. The connections made in this way have stood for the last four months

and are in first-class condition. In the shaft house and the stations, for extra protection, a box-casing, painted inside and out, large enough for 12 wires, is used. As soon as the wires are put in, the cover, which fits snugly, is painted and driven into place, making the joints water-tight. This puts the wires out of harm's way and makes a neat appearance.

Fig. 24 shows the system of wiring, which includes seven main wires, on which are 47 buttons, and one return wire. The main wires each have an 8-inch single-stroke bell with indicator attached, and are operated by four batteries. Two of the main wires run only from the shaft house to the cable-engine house. The different wires are indicated as shown in the figure.

44. Owing to the fact that the shaft was very wet, special wooden casings had to be constructed for the protection of the push-button. In these cases, the button was so arranged that the plunger was pressed up against the button from below, as shown in Fig. 25. This rendered the casing self-draining and thoroughly protected it from moisture.

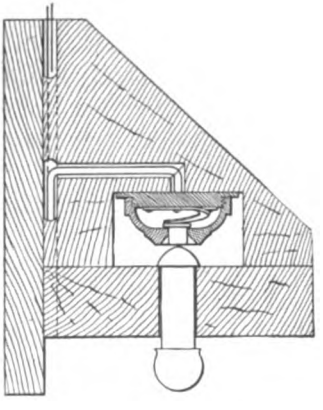

FIG. 25.

45. The heavy black line represents the return wire, which is connected to the negative pole of each battery and all the bells and buttons.

The main wire for the grade bell has a button on each level. By following the main wire from the positive pole of the battery in the cable-engine house to the grade bell in the shaft house, thence to one of the buttons in the mine, thence by the return wire to the negative pole, it will be seen that the grade bell will ring if any button on this line is pushed. The main wire for the timber-cage bell, which is in the hoisting-engine house, is shown as indicated. On

the men's-cage wire there are two buttons at each station, one of which can be rung from the cage. The east-skip main wire and the west-skip main wire are also indicated. One battery is sufficient for these two lines, as the skips are run in balance and only one bell is rung at a time. The main wire for the south cable-engine bell is shown. One battery answers for the grade bell and both cable-engine bells, as they are never rung together. When the system was first put in, there were only two batteries, one in each engine house on the return wire. The result of putting the battery on the return wire is that if a button is pushed on two or more lines at a time, the electromotive force on each will be much less than when one line is in use, and the bells will not ring properly. If the batteries are distributed, the chance of all the lines giving out at once is practically eliminated.

The indicator was designed by Mr. E. Roberts, master mechanic of the Penn Iron Mining Company. The hand of the indicator is revolved by a ratchet connected by a rod to the armature of the bell. The case and hand are the same as used for steam-gauges, and the face is a clock dial. The hand stops when it reaches 11 and may be brought back to 0 by pulling a cord. It is adjusted to register if the armature makes a quarter of its stroke. The object of the indicator is to enable the men to see as well as hear the signal.

ELECTRIC LIGHTING IN MINES.

46. Where electricity is used in mining, it is generally found advantageous to use a portion of the current for lighting, both in the surface plant and the underground workings. The light is brighter than that given by the miner's oil lamp or candle, it has no exposed flame to set fire to mine gas, requires little or no attention, and can not be blown out by draft. Of course, it is not portable to the same extent as a candle or oil lamp, and is, therefore, not generally used at the working-face, but for landings, main gangways, turnouts, and where machines are located, it is very useful.

INCANDESCENT LAMPS.

47. The Incandescent Lamp.—Incandescent lamps give approximately the equivalent in light of one standard candle for every 3½ to 4 watts consumed. As there are 746 watts in a horsepower, this means over 200 candle-power per horsepower expended. The lamp most commonly employed is of 16 candle-power, but they are made in various sizes up to 100 candle-power. The light emitted by the incandescent lamp is due to the heating of a fine filament or thread of carbonized vegetable substance by the passage of the electric current. The filament is enclosed in a bulb from which the air has been exhausted to a high degree to prevent rapid oxidation.

48. Voltage of Lamps. — Incandescent lamps are nearly always operated in parallel, i. e., connected directly

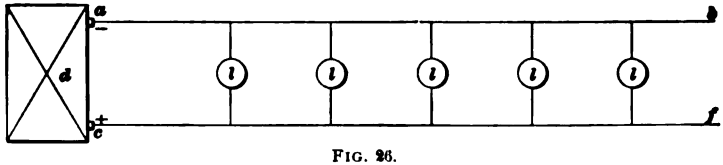

FIG. 26.

across the mains *b*, *f*, as shown in Fig. 26. The pressure maintained by the dynamo *d* is constant, no matter how many lights may be in operation, and as the lights *l* are turned on, the current delivered by the dynamo increases.

TABLE 1.

Volts.	Candle-power.	Amperes.
52	16	1.0
52	32	2.0
52	100	6.0
110	16	.5
110	32	1.0
110	100	3.0

The pressure maintained between the lines is usually in the neighborhood of 100 volts. The usual voltage employed when lamps are operated on direct-current circuits is 110 volts. The current required for the operation of incandescent lamps of the sizes and voltages commonly met with is about as given in Table 1.

The current required will vary according to the make of the lamp, as some lamps give more light per watt expended than others. About 3.5 watts per candle-power is a fair average, hence the current taken by a lamp may be obtained approximately from the formula

$$c = \frac{\text{c. p.} \times 3.5}{E}, \qquad \textbf{(1.)}$$

where E is the voltage at which the lamp is operated. The values given in the table are those generally employed in making calculations for lines supplying incandescent lamps.

ARC LAMPS.

49. Open-Arc Lamps.—Arc lamps are extensively used for outdoor lighting or in places where very large areas are to be illuminated—as, for example, around the entrance to shafts, etc. Fig. 27 shows the appearance of an ordinary arc. The carbon rods A, B are first touched together and then separated a short distance. A is connected to the positive pole of a dynamo and B to the negative, and when the carbons are separated, the current passes between them, forming the "arc." This causes the carbon-points to become heated to a very high temperature, and when direct current is used, the upper or positive carbon becomes much hotter than the lower. The lower carbon becomes pointed and the upper one has a small hollow, known as the *crater*, formed in its tip. This crater

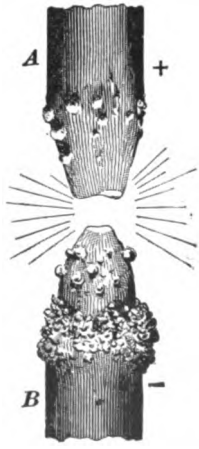

FIG. 27.

is the seat of the greater part of the light, and on this account the lamp throws the most intense illumination downwards at an angle of about 45°. When arc lamps are operated on alternating current, both carbons become pointed more nearly alike, and the light is thrown up more. On this account, alternating-current arc lamps should be provided with reflectors. Care should be taken in connecting up direct-current arc lamps to see that the upper carbon is connected to the positive side of the line, otherwise the lamp will burn "upside down," i. e., the crater will be formed in the lower carbon and the light thrown upwards. By allowing a lamp to burn for a short time, one can easily tell as to whether it is connected up correctly by noting the shape of the points. The lower carbon is nearly always fixed and the upper carbon fed down by means of a clutch or clockwork mechanism controlled by an electromagnet. These lamps are termed open-arc lamps, in order to distinguish them from the later style of enclosed-arc lamp, where the arc is enclosed in a small globe instead of being open to the air. An ordinary arc lamp of 1,200 nominal candle-power requires about 300 watts for its operation. A 2,000 nominal candle-power lamp requires about 450 watts, and the current is usually from 6.8 to 10 amperes. The ordinary 2,000 candle-power arc lamp requires a pressure of about 45 or 50 volts across its terminals in order to secure satisfactory operation.

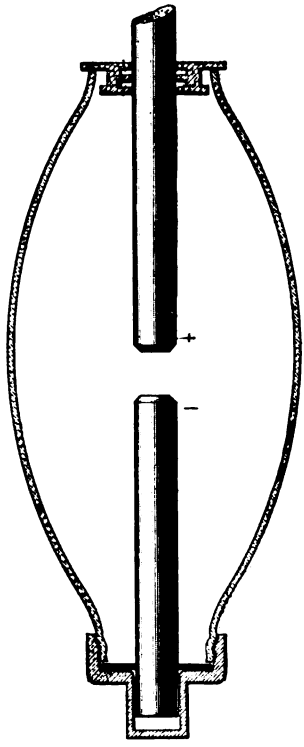

FIG. 28.

50. Enclosed-Arc Lamps. —In this style of lamp the arc is

enclosed in a glass bulb, as shown in Fig. 28. The enclosed-arc lamp is coming very largely into use, because it gives a fine, steady light and the carbons are consumed at a very slow rate, on account of their being enclosed in a space where very little oxygen is present. As soon as the arc is started, the oxygen present in the enclosing globe is soon burnt out, and the gases become so heated that they expand and pass out through the top around the upper carbon rod, as the rod does not, of course, fit air-tight. The result is that the arc burns in a partial vacuum, and the rate of consumption is so slow that a lamp will burn 150 hours without retrimming. An ordinary arc lamp will only burn about 10 hours before new carbons are required. For enclosed-arc lamps a very high grade of carbon must be used, so that the decreased cost of trimming is offset to a slight extent by the increased cost of the carbons. These lamps take a smaller current (from 3 to 6.6 amperes) than the open arcs, and require a correspondingly higher voltage (from 75 to 85 volts across the arc). They burn with a long arc, because it is necessary to have the carbons separated considerably, in order to allow the light to be thrown out properly. The carbons burn with flat ends, and do not become pointed, as in the open arc.

LIGHTING SYSTEMS.

INCANDESCENT LIGHTING BY DIRECT CURRENT.

51. Most of the incandescent lamps used in mines are operated by means of direct current. Very often the lamps are run in connection with the mine-haulage or pumping system and are operated from the same dynamo. It is better practice, where possible, not to operate lamps on a mine-haulage system, because one side (the track) of such a system is always grounded, and if lamps are run on such circuits there is always danger of getting shocks. There is

also more danger of fire, due to defective insulation, than if the lamps run on a circuit, both sides of which are insulated —as, for example, a regular power or lighting circuit.

52. As stated in Art. **48**, incandescent lamps are commonly connected in parallel, as shown in Fig. 26. If one lamp is put out, the others are not affected. For haulage or power circuits, the pressure used is usually 250 or 500 volts. If an ordinary 110-volt lamp were connected across such circuits, it would be at once burnt out; hence on 250-volt circuits, we must use two 125-volt lamps connected in series, as shown in Fig. 29. This is known as the **multiple-series** system. When 500 volts is used, five lamps would be

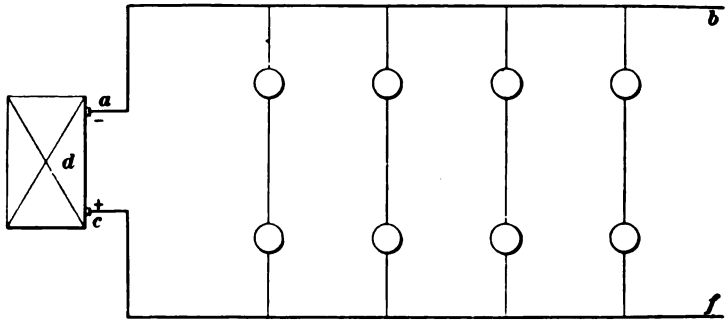

FIG. 29.

connected in series across the lines. Of course in the multiple-series system, when one lamp burns out, it puts out the others in series with it. With the lamps in multiple, as in Fig. 26, there will be $\frac{1}{2}$ ampere delivered over the line for each 16 c. p. lamp connected. With two lamps in series, there will be $\frac{1}{4}$ ampere in the line for each 16 c. p. lamp, or $\frac{1}{2}$ ampere for each pair of lamps, and with five lamps in series, there will be $\frac{1}{10}$ ampere per lamp, or $\frac{1}{2}$ ampere for each group of five lamps. These current allowances per lamp will be found useful in estimating the size of wire necessary to carry current to a number of lamps.

INCANDESCENT LIGHTING WITH ALTERNATING CURRENT.

53. Where lights are widely scattered or where it is a long distance from the dynamo to the point where the light is used, alternating current is employed, because this current can be generated at high pressure and transmitted over the line to a point near where it is to be utilized. The pressure is then lowered by means of transformers to a pressure suited to the lamps and the local distribution carried out at low pressure. This arrangement is shown in Fig. 30, where *G* is the alternating-current dynamo supplying current at high pressure to the primary coils of the transformers *T*. The secondary coils are connected to the lamps and supply current at low pressure. The pressure generated by the dynamo is usually 1,000 or 2,000 volts, and on account of this high pressure, the primary wires should not be carried anywhere in the mine where there is any liability of their being a source of danger. The best plan is to carry the primary wires to **substations,** where the transformers are placed and where there will be no danger from the high E. M. F. The current may then be distributed at low pressure from these substations, and by adopting this method there is no more danger connected with the use of alternating current than with direct current. Alternating current is coming rapidly into favor for use in mines in connection with pumping, hoisting, etc., and if properly installed, it is equally effective for lighting purposes, allowing the light to be distributed over wide areas with comparatively small line-wires. In some installations these substations are located above ground, and no high-tension wires whatever are allowed in the mine. If, however, properly

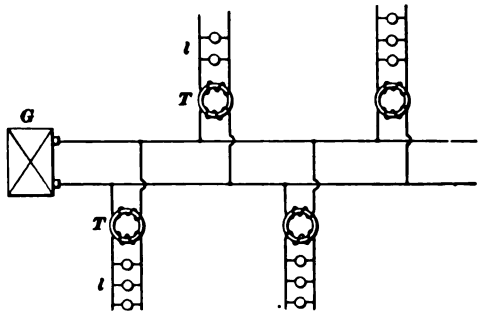

FIG. 30.

insulated high-tension cables are used, there is no reason why the current can not be carried safely to a substation located in the mine itself. The former is, however, the safer method, although it involves a somewhat greater expense for copper. With 1,000 volts on the primary circuit, about twenty 16 c. p. lamps can be operated per ampere delivered by the dynamo. With 2,000 volts, about forty lamps on the secondary will call for 1 ampere on the primary.

CONDUCTORS.

54. Material for Conductors.—Copper wire or cable is used almost exclusively, in connection with mine lighting, for conducting the current from the dynamo to the lamps. The lines are usually in the form of solid round copper wire, but when extra large conductors are required, stranded cables are used. The different sizes of copper wire are expressed according to gauge number, and the gauge most generally used in America to designate the different sizes of copper wire is the American, or Brown & Sharp (B. & S.). The sizes as given by this gauge range from No. 0000, the largest, .460 inch diameter, to No. 40, the finest, .003 inch diameter. Wire drawn to the sizes given by this gauge is always more readily obtained than sizes according to other gauges; hence, in selecting line-wire for any purpose, it is always desirable, if possible, to give the size required as a wire of the B. & S. gauge. A wire can usually be selected from this gauge which will be very nearly that required for any specified case.

55. Estimation of Cross-Section of Wires.—The diameter of round wires is usually given in the tables in decimals of an inch, and the *area of cross-section* is given in terms of a unit called a **circular mil.** This is done simply for convenience in calculation, as it makes calculations of the cross-section much simpler than if the square inch were used as the unit area. A **mil** is $\frac{1}{1000}$ of an inch,

or .001 inch. A *circular mil* is the area (in decimals of a square inch) of a circle, the diameter of which is $\frac{1}{1000}$ inch, or 1 mil. The circular mil is therefore equal to $\frac{\pi}{4}(.001)^2 =$ .0000007854 square inch.

If the diameter of the conductor were 1 inch, its area would be .7854 square inch, and the number of circular mils in its area would be $\frac{.7854}{.0000007854} = 1{,}000{,}000$; but 1 inch = 1,000 mils and $(1{,}000)^2 = 1{,}000{,}000$; hence the following is true:

$$CM = d^2,$$

or the area of cross-section of a wire in circular mils is equal to the square of its diameter expressed in mils.

EXAMPLE.—A wire has a diameter of .101 inch. What is its area in circular mils?

.101 inch = 101 mils.

Hence, $CM = (101)^2 = 10{,}201.$

Table 2, inserted here for convenient reference, gives the dimensions, weight, and resistance of pure copper wire. The weights given are, of course, for bare wire. The first column gives the B. & S. gauge number, the second the diameter in mils. The diameter in inches would be the number as given in this column divided by 1,000. The third column gives the area in circular mils, the numbers in this column being equal to the squares of those in the second column. The safe carrying capacity is also given. Usually the wires are strung in the air in mining work, so that the column headed "Open" may be taken as the carrying capacity. No wires smaller than No. 14 should be used in connection with lighting work.

56. When wires larger than those given in Table 2 are required, stranded cables should be used, because they are much more flexible and easily handled. Table 3 gives some of the standard sizes of cables.

TABLE 2.

PROPERTIES OF COPPER WIRE.—AMERICAN, OR BROWN & SHARPE, GAUGE.

Number B. & S Gauge	Diameter in Mils.	Area in Circular Mils. $CM = d^2$.	Weights.		Resistance per 1,000 Ft. International Ohms. 75° F.	Current Capacity (Amperes) National Board Fire Underwriters.	
			Per 1,000 Ft	Per Mile.		Open	Concealed.
0000	460.0	211,600	641	3,382	.04966	312	218
000	409.6	167,805	509	2,687	.06251	262	181
00	364.8	133,079	403	2,129	.07887	220	150
0	324.8	105,534	320	1,688	.09948	185	125
1	289.3	83,694	253	1,335	.1258	156	105
2	257.6	66,373	202	1,064	.1579	131	88
3	229.4	52,634	159	838	.2004	110	75
4	204.3	41,742	126	665	.2525	92	63
5	181.9	33,102	100	529	.3172	77	53
6	162.0	26,250	79	419	.4104	65	45
7	144.2	20,816	63	331	.5067		
8	128.4	16,509	50	262	.6413	46	33
9	114.4	13,094	39	208	.8085		
10	101.8	10,381	32	166	1.010	32	25
11	90.7	8,234	25	132	1.269		
12	80.8	6,529	20	105	1.601	23	17
13	71.9	5,178	15.7	83	2.027		
14	64.0	4,106	12.4	65	2.565	16	12
15	57.0	3,256	9.8	52	3.234		
16	50.8	2,582	7.9	42	4.040	8	6
17	45.2	2,048	6.1	32	5.189		
18	40.3	1,624	4.8	25.6	6.567	5	3
19	35.8	1,288	3.9	20.7	8.108		
20	31.9	1,021	3.1	16.4	10.260		
21	28.5	810.1	2.5	13.0	12.940		
22	25.3	642.4	1.9	10.2	16.41		
23	22.6	509.4	1.5	8.2	20.57		
24	20.1	404.0	1.2	6.5	26.01		
25	17.9	320.4	.97	5.1	32.79		
26	15.9	254.1	.77	4.0	41 56		
27	14.2	201.5	.61	3.2	52.11		
28	12.6	159.8	.48	2.5	66.18		
29	11.3	126.7	.39	2.0	82.29		
30	10.0	100.5	.30	1.6	105.1		

TABLE 3.

CARRYING CAPACITY OF CABLES.

Area Circular Mils.	Current Amperes.		Area Circular Mils.	Current Amperes.	
	Exposed.	Concealed.		Exposed.	Concealed.
200,000	299	200	1,200,000	1,147	715
300,000	405	272	1,300,000	1,217	756
400,000	503	336	1,400,000	1,287	796
500,000	595	393	1,500,000	1,356	835
600,000	682	445	1,600,000	1,423	873
700,000	765	494	1,700,000	1,489	910
800,000	846	541	1,800,000	1,554	946
900,000	924	586	1,900,000	1,618	981
1,000,000	1,000	630	2,000,000	1,681	1,015
1,100,000	1,075	673			

57. The wires used for supplying the current to lighting circuits in mines should be well supported on porcelain insulators. The wire itself is usually covered with a double or triple braiding of cotton soaked in insulating compound. Where extra good insulation is required, rubber-covered wire should be used.

58. Joints. — When it is necessary to make joints between wires, it is important to remember that the work can not be too well done. Under no circumstances should a joint be left unsoldered. When connecting a branch line to the main, the insulation is cut away as shown in Fig. 31; the cut should not be made straight down towards the wire with the edge of the knife, forming a sharp shoulder on the insulation, as the knife is very likely to make a nick in the wire, and

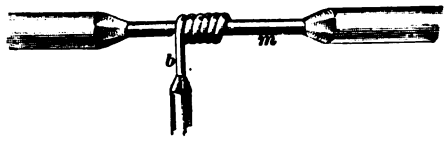

FIG. 31.

subsequent bending might produce a crack at this point. Such a fault would increase the resistance locally and cause heating and, possibly, fire risk. In the illustration, the branch wire *b*, after being carefully bared of insulation and scraped clean, is wrapped over the main *m*, similarly exposed. This operation should be done with a pair of pliers of convenient size, and the turns of *b* should be close together. The joint should then be soldered, no acid being used, but resin only, as a flux, the reason being that it is impossible to clean off all the acid after the joint is finished, as some remains in the crevices and will eventually corrode the wire and break the electrical circuit. When the joint is cool, the wire is held firmly by the solder; all the exposed wire should then be covered by wrapping rubber insulating tape carefully over it, continuing across a short distance on the main insulation. It may here be remarked that it is not so easy to make a resin joint as one on which acid is used, which explains the disfavor in which the former is usually held by poor workers. Acid removes grease from the wire, such as a careless workman may have smeared on from his fingers, but when the wire is not handled after cleaning, resin will

FIG. 32.

make a good joint. An alternative method is to tin both wires before wrapping, using acid as a flux; then wipe carefully, cleaning thoroughly, to remove all trace of acid, and wrap over, using pliers to bend the wire. The joint should then be completed with resin as a flux. When two wires are to be connected together to form a continuous conductor, the Western Union joint, Fig. 32, is employed, the wires being twisted one over the other, soldered, and taped.

CALCULATING SIZE OF WIRE FOR LIGHTING CIRCUITS.

59. The size of wire required to supply a given number of lamps situated a given distance from the dynamo will depend upon the amount of loss that is allowed in the line. The loss

in the line due to its resistance causes a **drop** in pressure between the dynamo and the lamps. For example, if the resistance of the wire through which the current has to flow were R ohms and the current supplied C amperes, the pressure which would be used up in forcing the current through the line would be $C \times R$ volts. This pressure used up in driving the current through the wire is spoken of as the **drop,** because the pressure at the end of the line is less or drops off by this amount from the pressure at the dynamo. If we can afford to allow a large line drop, or, what is equivalent to the same thing, if we can afford to have a large loss in the line, it is evident that we may use a line having a large resistance. This means that the wire may be small and consequently cheap. For distributing from the dynamo to the different centers at which the lights are supplied, a drop anywhere from 5 to 15 per cent. of the lamp voltage is allowed. For local distribution on the branch circuits directly connected to the lamps, the drop should not exceed 2 or 3 per cent., because if it does the lamps will give a very poor light. The aim should be to keep the pressure at the different centers of distribution as constant as possible. If this is done and the drop in the lines running from the centers of distribution to the lamps is small, a good lighting service will result, and the life of the lamps will be much longer than it would be were the voltage regulation bad.

60. When the size of wire for supplying a number of lamps is to be estimated, the distance from the dynamo to the lamps must be known; the allowable amount of drop in the line and the current must also be known. The current can easily be estimated from the known number of lamps and their candle-power.

Let C = current supplied over the line;
L = total length of the line *in feet* (i. e., distance to lamps and return);
E = voltage at end of circuit where lights are located;

$\%$ = percentage drop (i. e., percentage of voltage at the lamps);

A = area of cross-section of wire in circular mils;

then,
$$A = \frac{10.8 \times L \times C \times 100}{E \times \%}, \qquad \textbf{(2.)}$$

or
$$A = \frac{10.8 \times L \times C}{\text{volts drop}}. \qquad \textbf{(3.)}$$

EXAMPLE.—A certain portion of a mine is to be lighted by fifty 16-candle-power, 110-volt lamps and ten 32-candle-power lamps. This portion of the mine is 1,000 feet from the dynamo room, and the drop is not to exceed 5% of the voltage at the lamps. Find the size of wire required.

SOLUTION.— 50 16 c.p. 110-volt lamps require 25 amperes.
10 32 c.p. " " " 10 amperes.

Total current, 35 amperes.

The total length of wire through which the current will flow will be $2 \times 1{,}000 = 2{,}000$ feet, because the current has to flow to the lamps and back again. Applying formula **2**, we have

$$A = \frac{10.8 \times 1{,}000 \times 2 \times 35 \times 100}{110 \times 5} = 137{,}454 \text{ circular mils.} \quad \text{Ans.}$$

By looking up the wire table, we find that this corresponds to about a No. 00 B. & S. wire. It is very seldom that a wire will figure out so as to correspond exactly with any size given in the wire table. The next larger size is usually taken rather than the next smaller, unless the smaller size should be quite near the calculated value.

EXAMPLE.—Current is to be delivered to a mine 2 miles distant from the power station by means of alternating current at 2,000 volts. The drop in the line is not to exceed 10 per cent. Six hundred lamps are to be operated at the distant end from the secondaries of transformers. Calculate the size of the line-wire required.

SOLUTION.—Each ampere on the 2,000-volt primary lines is equivalent to 40 lamps on the secondary (see Art. **53**); hence the current will be approximately $\frac{600}{40} = 15$ amperes. The total length of line will be $5{,}280 \times 2 \times 2 = 21{,}120$ feet; hence we have

$$A = \frac{10.8 \times 21{,}120 \times 15 \times 100}{2{,}000 \times 10} = 17{,}107 \text{ circular mils.} \quad \text{Ans.}$$

This lies between a No. 7 and No. 8 B. & S. No. 7 would probably be used, so as to allow a margin for additional lights that might be needed in the future.

ARC LAMPS ON CONSTANT-POTENTIAL CIRCUITS.

61. Arc lamps are frequently run on constant-potential or constant-pressure circuits in the same way as incandescent lamps. With the older types of arc lamps, it was necessary to connect two lamps in series across the 110-volt circuit, in order to take up the full pressure. It will be remembered that an ordinary open-arc lamp requires about 45 volts; hence if two are connected in series across the line, they will take up 90 volts, and the extra 20 volts must be taken up by a resistance *R*, as indicated in Fig. 33, where the arc lamps are

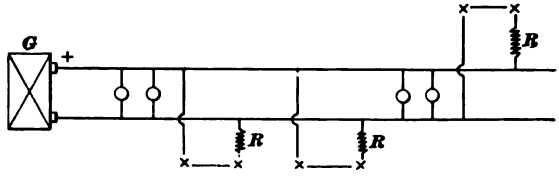

FIG. 33.

shown connected, two in series across a 110-volt circuit. This method of operating arc lamps is not, on the whole, very satisfactory, because the two lamps are apt to interfere with each other and not feed properly. This method of running open-arc lamps is being rapidly superseded by the use of the enclosed-arc lamp. As already stated, the enclosed arc requires from 75 to 85 volts for its operation and may be connected directly across a 100 or 110 volt circuit by the insertion of a small amount of resistance. Such lamps are very often convenient for use about mines, because they can be operated from the same dynamo and off the same mains that supply the incandescent lamps.

PROTECTION AGAINST SHORT CIRCUITS.

62. Before leaving the subject of lighting as carried out on constant-potential systems, it may be well to point out the necessity of protecting such systems from **short circuits.** It must be remembered that the pressure between

the mains is maintained at a constant value by the dynamo. Compound-wound dynamos are generally used, and these machines maintain the pressure at a nearly uniform value, regardless of the amount of current they are called upon to furnish. From Ohm's law, $C = \frac{E}{R}$, it is at once seen that if E, the E. M. F., is kept constant, the current will depend upon the resistance between the two lines. If the resistance is high, the current will be small, but if the resistance is very low, the current may become dangerously large. If the two line-wires should be accidentally connected together, or, in other words, if a *short circuit* should be established between them, there would be a large rush of current, which might be sufficient to fuse the wire. Such short circuits are liable to occur, on account of accidents of various kinds, and it is necessary to provide some protection against them. In lighting work, this protection is generally provided for by means of fuses. These are usually in the form of a short piece of wire or strip made of a soft, fusible metal, which will melt and cut out the defective part of the circuit whenever the current reaches a dangerously high value.

63. The fuses are mounted in **fuse blocks** or **cut-outs,** and should be placed wherever a branch circuit is taken off the main line. A small fuse should also be placed in series with each individual lamp, especially if such lamp is hung from a drop cord.

Fig. 34 shows a cut-out of the kind referred to. It is called a rosette cut out and is principally used where a lamp drops from the supply wires. The figure shows the inside view of the two halves. They are both composed of porcelain, upon which metallic connection pieces are screwed. The half B is fastened in place through the holes h and h_1. The supply wires are connected to the binding-posts p and p_1, which are themselves connected to the two projecting elastic plates of metal c and d.

The half A has two projecting metallic pieces m and n, which hook in under c and d and make the connections when

the two halves are put together. The side view of *m* or *n* is given at *f*. Upon each of these pieces at the end that rests against the porcelain is a binding-screw *s* or *x*. Two small metallic plates, each carrying a pair of binding-screws *t* and *v*, or *z* and *y*, are screwed upon the porcelain at diametrically opposite points, and the lamp conductors,

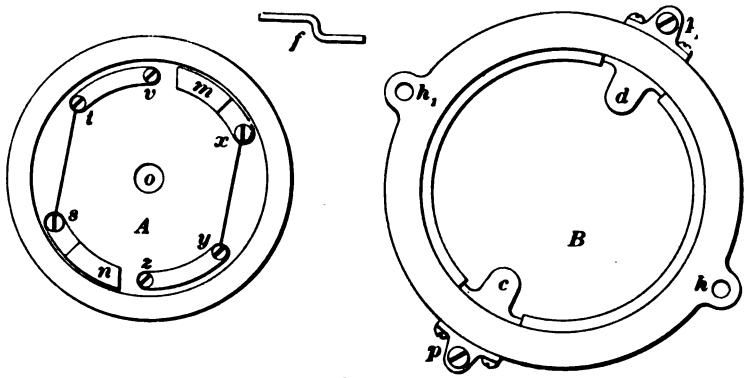

FIG. 34.

entering at hole *o*, are connected to *v* and *z*. If flexible cord is used, it should be knotted under the cap, in order to sustain the weight of the lamp. Between the two binding-screws *t* and *s*, as well as between *x* and *y*, are respectively connected two strips of a fusible alloy. This alloy melts and breaks the circuit when the current increases above a given value.

The current starts from one supply wire and flows through *d*, *m*, and the alloy or fuse wire *x y* to *z*. Then it flows through the lamp to *v*, through the fuse wire *t s* to *c*, and out to the other supply wire. The two halves are connected by a screwing motion, which rubs the contact pieces together.

64. The ordinary form of detachable fuse is shown in Fig. 35. The contact pieces *a* and *b* are made of sheet copper, and are intended to be clamped by screws to the terminals provided for them on the fuse blocks.

FIG. 35.

A strip *c* of fusible lead alloy is soldered to each contact piece, its cross-section being proportional to the maximum current to be carried, which is stamped on the copper ends. As a guide to the carrying capacity of fuses, the following table may be consulted, but it is to be pointed out that the fusing current depends upon the particular proportion of the metals used in the alloy and their selection, also on the length of fuse and the character of the terminals.

TABLE 4.

Diam. in Mils.	B. & S. Gauge (Approx.).	Amperes.
.017	25	3
.020	24	4
.032	20	7
.042	18–17	10
.056	15	15
.065	14	18
.075	13–12	25
.085	12–11	28
.096	11–10	31
.111	9	36
.130	8	50
.150	7–6	70

65. Fuse blocks are nearly always made of porcelain or slate and are of a great variety of styles, depending upon the use to which they are to be put, their current capacity, etc. Fig. 36 shows a **branch block** used where a branch circuit is to be taken off the main line. The mains may be connected at *m*, *m'*, the wires passing under the projecting ledges *l*, *l'*. The branch wires are secured

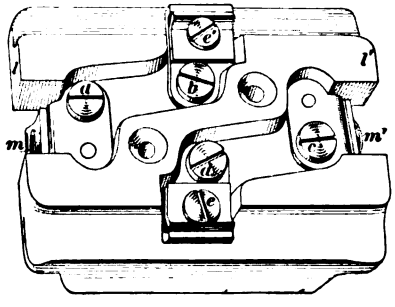

FIG. 36.

at e, e'. The fuses are held between the screws a and b, c and d. To prevent damage when a fuse "blows" or melts, a porcelain cover is fitted over the face of the block.

Fig. 37 shows a **main fuse block,** the wires from the point of supply being inserted at one end, as at m, m, and the line

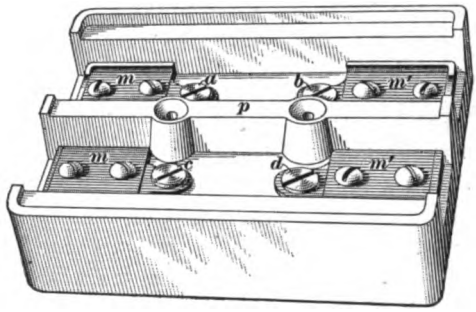

FIG. 37.

continued from the terminals m', m' at the other end. The fuses are inserted between the screws a and b and between c and d. The two sides of the circuit are separated by the partition p, so that all danger of short circuit is eliminated. This fuse block is also provided with a porcelain cover not shown in the figure.

66. When fuse blocks are installed in mines, they should always be placed at some easily accessible point, so that they may be readily examined and fuses replaced when necessary. It is a good plan to place the blocks in a wooden box painted with waterproof paint and provided with a hinged door.

SWITCHES.

67. Switches used in connection with incandescent lighting may be of the **single-pole** or **double-pole** variety. In the former, one side only of the circuit is opened by the switch, while in the latter both sides are opened. Where small groups of lights are to be controlled, say 6 or 8 lights, a single-pole switch will answer; but where the number of lights is at all large, double-pole switches should be used.

The most durable type of switch is the knife-blade type described in Art. **123,** *Dynamos and Motors*, Part 3. Such switches, mounted in wooden boxes painted with weather-proof paint, make a very good arrangement for mining work. These switches are much more durable than the ordinary snap switches, such as are frequently used in connection with electric wiring. It is always well to mount the switches, no matter what kind is used, in a protecting box of some kind.

68. It must be said, in regard to most of the snap switches on the market, that they are very flimsy. Of course some of them are much better than others, but, as a general rule, they do not stand the hard usage they are liable to get in a mine. For this reason, a good substantial knife switch is to be preferred. We give, however, a couple of examples of typical snap switches which, if not abused, will give good service. They have one advantage in that they are more easily operated in the dark than a knife switch.

69. The style of switch shown in Fig. 38 is suitable for use on circuits where the current does not exceed 50 amperes.

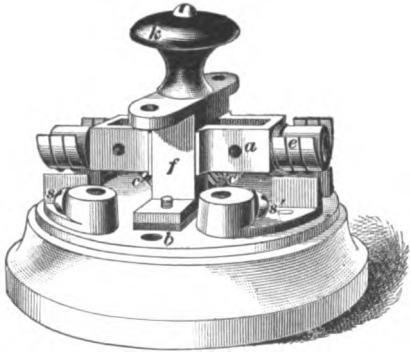

FIG. 38.

The positive and negative leads are brought up through the hole in the base *b* and connected one to each of the terminals shown by means of the screws *s*, *s'*. The leads for the lamps are connected in a similar manner to corresponding terminals on the other side of the switch, and the circuit is completed by forcing the arm *a* into contact with these terminals, thereby bridging over the gap between them. The knob *k* is fastened to a pin passing vertically through the frame *f* and secured to the springs *c*, *c'* at the lower end in such a way as to form a toggle-joint. When the knob

is drawn upwards, the springs are compressed, and on passing the center, they suddenly force the contact arm downwards. In like manner, on pressing the knob down, contact is again broken.

70. Fig. 39 shows a double-pole switch for small currents. The cylinder *e*, made of china or other insulating substance, has brass contact plates *p* on opposite sides, against which press brass or copper springs when the cylinder is in the position indicated in the figure. Four terminals are provided, lettered *a*, *b*, *c*, *d*, and the wires for connection to them are brought up through the holes in the base, one of which is visible. The incoming wires, positive and negative, are connected to the terminals *b* and *d*, and the outgoing wires to *a* and *c*. The springs *a'*, *b'*, *c'*, *d'* are riveted to the terminals *a*, *b*, *c*, *d*, respectively, so that when the switch is turned to the position shown, the circuit is completed between terminals *a* and *b* and between *c* and *d*. A quarter-turn breaks the contact, for the springs then rest only on the china cylinder. A cover is provided to enclose the body of the switch, the handle alone projecting.

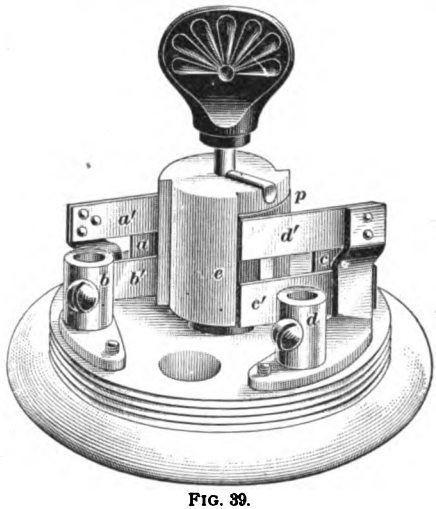

FIG. 39.

71. Sometimes it is very convenient to have switches arranged so that an incandescent lamp or group of lamps may be turned on or off from either of two points. This may be accomplished by using two "3-point" switches as shown in Fig. 40. *L*, *L* are the lamps to be controlled from the two stations *A* and *B*. The switches *A* and *B* have three points, since the contact plates *a*, *a'* are connected together

and practically form a single terminal. The contact arm of the switch is thrown from the position shown to that indicated by the dotted line when the switch handle is turned.

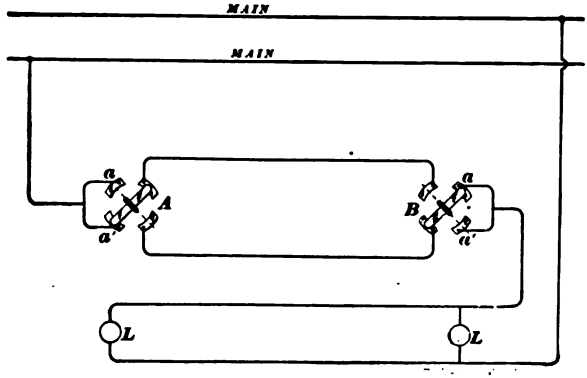

FIG. 40.

By tracing out the connections, it will readily be seen that the lamps may be turned on or off from either station without regard to the position of the switch at the other station.

72. By an extension of the arrangement just mentioned, lamps may be controlled from three or more stations.

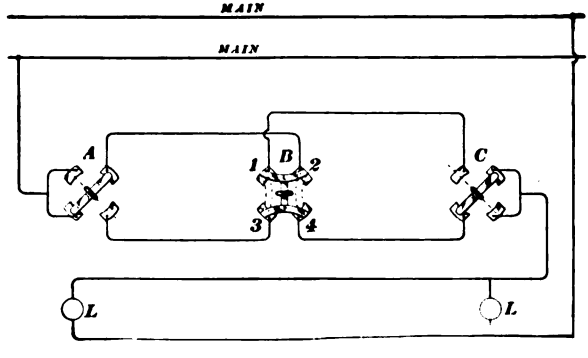

FIG. 41.

Fig. 41 shows how this is carried out for three stations by using two 3-point switches *A* and *C*, one for each end station, and one 4-point switch *B* for the center station. As

shown in the figure, the points *1* and *2*, *3* and *4* of the 4-point switch are connected together. When the switch is turned; points *1* and *3*, *2* and *4* are connected, as shown by the dotted lines. By this arrangement, the lights may be turned on or off from any one of the three stations. This scheme can be extended to any number of stations by adding another 4-point switch for each additional intermediate station.

SERIES ARC-LIGHT SYSTEM.

73. All the lighting so far mentioned has been carried out on the constant-potential system, the lamps being connected in parallel. When a number of scattered arc lamps are to be operated, the **series system** is commonly used. In this case the lamps *l* are connected in series, as shown in Fig. 42. The same current flows through all the lamps, leaving generator *G* at the positive pole and flowing through each lamp in succession back to the negative pole. In a circuit of this kind, the current must be maintained at a constant value, because the current through the lamps must always remain at the same amount if the lamps are to operate in a satisfactory manner. If a large number of lights are burning, a high pressure must be generated by the dynamo (about 45 or 50 volts for each lamp in operation). If, on the other hand, most of the lamps are cut out, the pressure required will be small, and the E. M. F. generated by the dynamo must be cut down, in order that the current may remain constant. This is accomplished by providing the dynamo with an automatic regulator, which causes the E. M. F. generated to decrease whenever the load decreases, and *vice versa*. The size of line generally used for arc-light circuits is No. 6 or 8 B. & S.

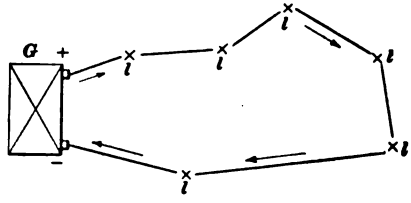

FIG. 42.

ELECTRIC COAL-CUTTING MACHINERY.

ELECTRIC COAL-CUTTING MACHINERY.

1. In the production of bituminous coal, the question of decreasing the cost has received much consideration, and the reductions in this respect, as in almost all others, have been made in large part by the use of labor-saving machinery. Another reason which has led to the introduction of coal-cutting machines is found in the fact that a greater output can be obtained from a limited territory with more certainty, steadiness, and reliability than can be depended upon when pick mining is used. As the most difficult and expensive operation in connection with the production of bituminous coal is the process of undercutting, the greatest development has been made in machinery for accomplishing this operation. This method of mining is confined to the bituminous fields, the anthracite coal being simply blown from the solid.

In order that the bituminous coal may be made into the best marketable form, it is first undercut and then blown down with as small a charge of powder as possible. Many machines have been designed and built to undercut coal; and machines for this purpose have reached such a degree of perfection that it can safely be said that a large, if not the greater, proportion of coal cutting will in the future be done by mechanical means. The flexibility and convenience of the electric system, together with many other advantages peculiar to existing conditions, makes it admirably

adapted to the present bituminous fields throughout the world.

In many mines the conditions are more favorable to the use of machines operated by compressed air, and where such conditions exist there is but one alternative. There are three principal conditions which particularly favor compressed-air machines, these being bad roof, explosive gas in dangerous quantities, and frequent occurrence of pyrite or other hard substance which can be worked around with a pick machine which uses compressed air, but which would break the teeth or other parts of a chain-cutting machine. In mines where the roof is bad and it is necessary to place the props close to the face, requiring a machine which can be operated in very narrow places, the pick, or puncher, machine is the only one which can be used. Pick machines are usually operated by compressed air, but recently electricity has been successfully applied to machines of this type. Machines operated by alternating-current motors which are practically sparkless have been built and several plants installed, but this system has proved to be unsuitable for machinery designed for this class of work, principally on account of the danger to men and animals. The few plants that were installed are entirely abandoned. The continuous-current motor is consequently the only one being used.

TRANSMISSION OF ELECTRIC ENERGY TO MINING MACHINES.

2. The flexibility of the electric system of transmitting energy, together with its low cost and high efficiency, makes it especially suitable for undercutting machines, which are used at the working-faces of the entries and rooms. The current is carried through the main and cross entries by wires forming a complete circuit with a positive and negative side, the cross-section of wire used being determined by the amount of current required to be carried, this wire being supported on glass insulators, which are attached to timbers

or props. From the entries the power is taken to the working-faces of the rooms by means of an insulated cable, these cables being of sufficient length to reach the face of the room when it has been worked to its greatest depth.

3. As it is more economical to transmit power at high than at low voltages, this feature in the transmission of electrical power has received much consideration where it is desired to carry power from a central plant to several mines which are situated a number of miles from the central station. By using high voltages, small wires can be used and a very great reduction in the cost of this portion of the plant can be made. In order to transmit power at high voltages, it is necessary to use the alternating-current system, and in order to adapt this to the direct-current motor on the machines or locomotives, it is necessary to transform it to a direct current of low voltage. That this may be done, it is necessary to employ a rotary transformer or motor generator. The advisability of using this system depends entirely upon local conditions, and should be determined upon the basis of comparative initial and operating expenses.

4. In constructing circuits about mines, care should be taken to place the wires as much out of the way of men and mules as possible. There is always danger connected with coming in contact with an electrical circuit, and those who are required to work in connection with construction of circuits should be provided with tools properly insulated, wear rubber gloves, and when working with the wire, stand upon some insulating material such as rubber or dry wood. Fatalities in mines due to contact with wires are rare and generally in connection with alternating-current machinery. The voltage used with direct-current machinery is so low that very little danger exists from contact with the wires. As some persons are more affected by an electric shock than others, it is best to caution all workmen of the danger of coming in contact with the wires.

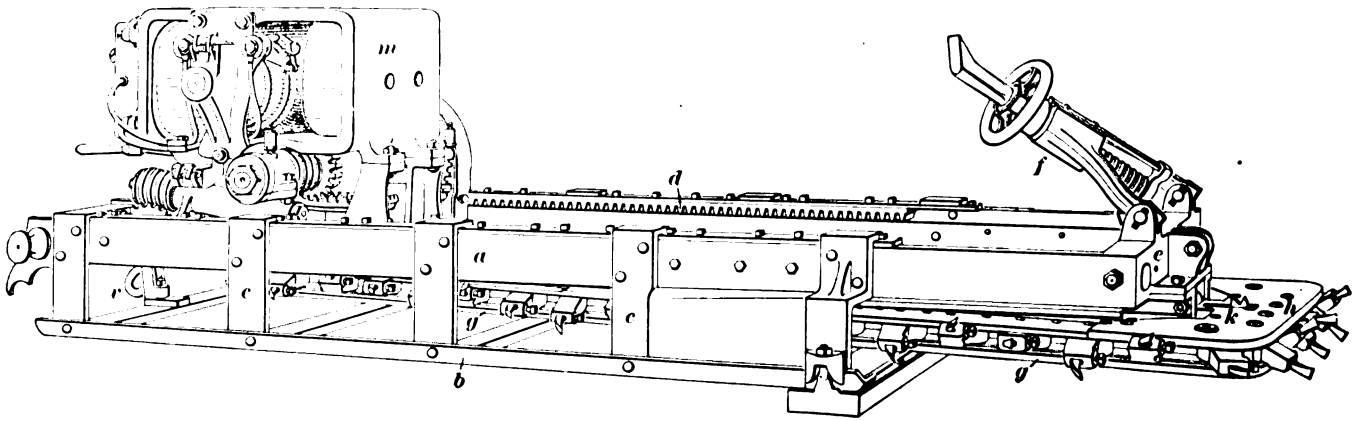

FIG. 1.

CHAIN COAL-CUTTING MACHINES.

5. Fig. 1 is an illustration of one of the leading types of electric chain coal-cutting machines. It consists of an outside or bed frame and inside or sliding frame and an electric motor. The outside or bed frame is made of two steel channel-bars *a* and two angle-bars *b* fastened together by means of heavy cast and forged steel cross-ties or braces *c*. The feed-racks *d*, which are made of the best rolled steel and have machine-cut involute teeth, are firmly bolted to the bed-frame. These racks are made up in sections, so that in case a tooth should be broken it can be replaced without renewing the entire rack. The rear end of the bed-frame is provided with hooks for moving the machine and a cross-bar on which rests the rear jack or the brace which passes to the roof to take the backward thrust of the machine. A heavy steel cross girt *e* joins the channel-bars at the front end of the bed-frame. The front jack *f* is mounted on the cross girt and the guides for the center rail of the sliding cutter frame are attached to the bottom of it. These guides consist of two adjustable bronze parts of extra length to give large wearing surface for the bearing of the center rails. As the floor of a mine is very uneven and would seldom be level enough to allow the machine to have a firm bearing, the outside frame is designed strong and rigid, so that there can be no bending due to irregularities in the floor. The rigidity of this frame does away with the friction caused by lighter and less rigid construction.

The inside or sliding frame is the shape of an isosceles triangle with the apex at the rear, and consists of a steel center rail, a cutter-head *h*, and two side chain guides *g*. This sliding frame is contained wholly, with the exception of the cutter-head, within the stationary bed-frame, which arrangement insures perfect protection to persons while it is in operation or when it is being moved from one place to another. As this frame comes in direct contact with the coal, it is made strong and has large wearing surfaces, and since its shape is triangular, only three wheels are required

for the cutter chain, two sheaves or idlers in the cutter-head and one a driving sprocket at the apex of the frame. The center rail is secured to the sliding carriage on which the electric motor is placed by means of a steel step casting. A holder *k* is placed in the center of the cutter-head to take a portion of the side thrust of the chain when cutting coal. The driving mechanism consists of two steel spur-wheels and two steel bevel-gears, while the feed and pull-back mechanism consists of a system of worms and wheels.

The motor *m* is of the multipolar iron-clad type. The field frame is of cast steel and so proportioned as to make a compact and symmetrical appearance. The commutator is of high-grade hard-drawn copper. The frame of the motor surrounds the field coils and armature in such a manner that they are thoroughly protected from injury by falls of roof or dripping of water. The feed mechanism is automatically thrown out at the end of the cut and the cutter frame travels back from the face until it reaches a point where it automatically throws out the clutch and stops. The machine makes a cut 6 feet deep in about 3½ minutes and backs out or withdraws from the cut in about 40 seconds. Machines of this type are built to undercut from 5 to 7 feet deep, 39 to 44 inches wide, and about 4 inches high.

6. Fig. 2 shows a chain cutter which is constructed in a somewhat different manner than the one shown in Fig. 1. This difference exists principally in the construction of the stationary frame, which is much lighter, and in the position of the armature, which is vertical instead of horizontal. This machine weighs about 3,000 pounds and will advance while making a cut in the coal in about 4 minutes, and return in about 1 minute.. On either of the above machines the time of feed or return can be changed by substituting different gears, the ratio of the gearing depending upon the quality of the coal in which the machine is working. The total length of the machine of this type which will undercut to a depth of 6 feet is about 10 feet over all, the height being

about 29 inches over all. The width of the machine at the cutter-head is 42 inches over the chain and 45 inches over the bits or cutters, these not being shown in the figure. The width across the bed-frame is 24 inches. This enables the machine to be loaded on a truck which will run on a track having a gauge as narrow as 28 inches. The motor is of the multipolar type with internal fields. The armature is of the toothed Gramme ring type with the coils wound in slots

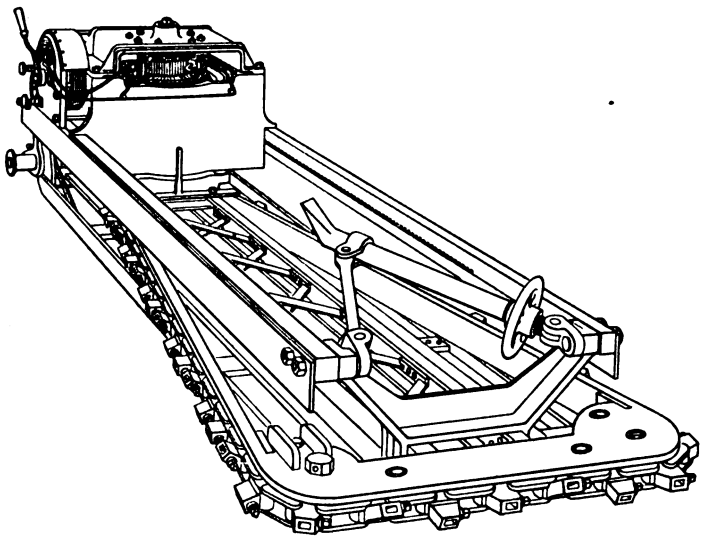

FIG. 2.

below the surface of the armature. This, as in the former machine, protects the coils from danger by rough usage and in case of accident. The field coils are wound on spools that slip over the pole-pieces and can be easily removed.

The gears are made from steel, the teeth being cut out of the solid, thus making the gear solid with the shaft on which it works. The armature being mounted in a vertical position, the pinion on its shaft meshes with a large spur-gear which carries the main drive sprocket. The speed of the chain on this machine is about 273 feet per minute when the armature is running at 750 revolutions per minute at

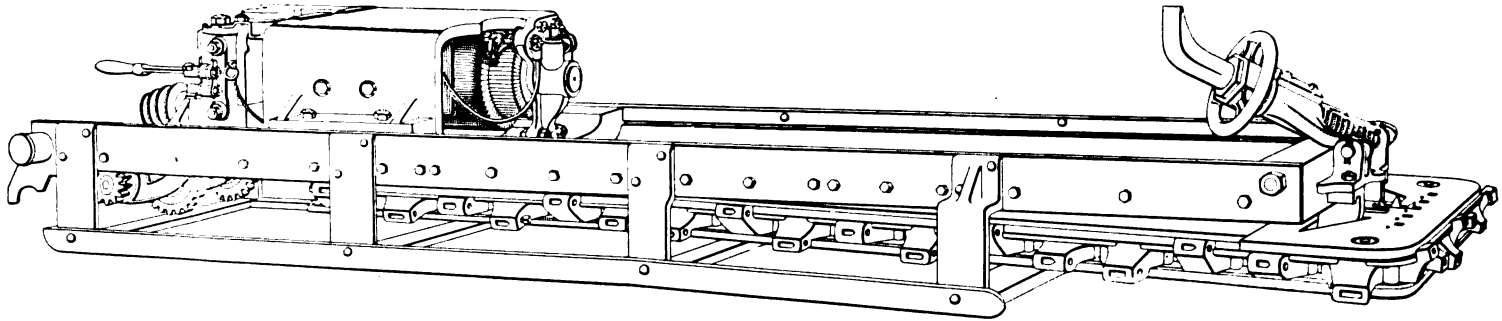

FIG. 3.

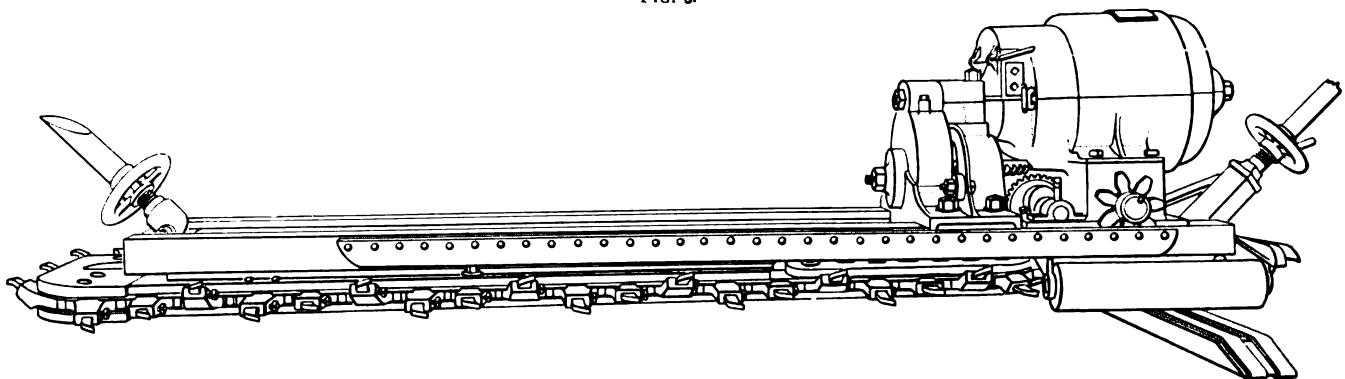

FIG. 4.

220 volts. The general construction of this machine will be understood from the description of the previous one.

The chain used on these machines is of the three-position style, having up, down, and center position bits. All the bits are straight and of the same length, which greatly facilitates the redressing and replacing of them.

7. Much attention has been given lately to the construction of electric machines to be used in mines where the seam of coal is low, and such machines have been designed, and their installation at many mines has proved the practicability of working machines in seams as low as 28 inches. Fig. 3 shows one of these machines. It is essentially the same as the one shown in Fig. 1, but it is much more compact, measuring only 18½ inches over all in height.

8. Another type of the chain-cutting machine is shown in Fig. 4. One of the points of difference between this machine and those previously described is that all the stationary parts of the machine are above the moving and cutting parts. The stationary frame is supported by a shoe at its forward end (not visible in the illustration). This shoe is on a level with the lower row of cutting bits, so that the cut is made even with the floor of the room and no coal is left to be removed by hand. Another feature of this machine is the rollers attached to the rear end to facilitate moving it along the face of the coal. While the machine is at work the rollers are securely locked in place. The style of motor is also different from those previously shown. The motor, which is of the multipolar type, is enclosed in a barrel-shaped, dust and water proof iron casing. The armature shaft is longitudinal with the machine. At its front end is keyed a cut spur pinion 3½ inches in diameter and having a 3-inch face. This meshes into an intermediate gear of steel 14½ inches in diameter and a 3-inch face. A forged-steel bevel pinion is keyed rigidly to this intermediate gear and meshes into a cast-steel bevel-gear with cut teeth. This bevel-gear is attached to a sleeve

which revolves on a vertical shaft, the main driving sprocket which actuates the cutting chain being keyed to the lower end of this sleeve.

The chain, cutting bits, and feed mechanism with automatic cut-off at the end of the cut and return travel are common to all these machines, the two first being practically the same in all.

There are other machines which have been built and experimented with, but are obsolete types. Among these is the three-phase alternating-current machine, which has for reasons already named been discarded. A careful study of one of the above types will give an insight into the general construction of machines for undercutting coal, and a closer study of each machine will be necessary to become familiar with the minor details wherein the differences in construction exist.

9. Fig. 5 shows a side view (*a*) and a front view (*b*) of a portion of a cutter chain. It also shows a bit or cutter (*c*), which is made of good tool steel. The chain carrying the cutter is subjected to great stresses and wear and tear, and

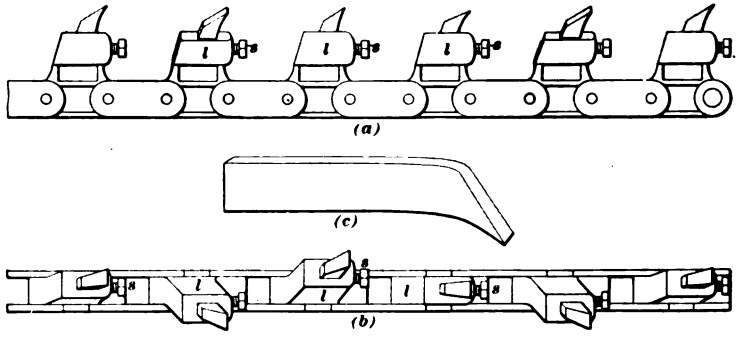

FIG. 5.

consequently must be made strong and of as few parts as possible. Since it is necessary to sharpen the cutters frequently, some easy means of detaching them must be provided. This is done by having a socket in each solid link,

or every alternate link *l*, in the chain, into which the bit will fit. After the bit is placed in this socket, it is held in place by means of a set-screw *s*, which is adjusted from the side of the link.

METHODS OF OPERATING AND HANDLING CHAIN-CUTTER MACHINES.

10. By referring to Fig. 6 a very good idea can be obtained of the manner of operating these machines. For transporting the machine from point to point about the mine, a truck such as is shown in Fig. 7 is used. The machine is loaded on this truck and drawn into the room by a mule or its own motor. It is then unloaded and placed directly in front of the working-face at the point where it is desired to begin undercutting, and leveled up to conform to the bottom of the seam of coal. Under the rear end of the machine is placed an oak skid board, upon which is riveted two pieces of half-round iron, upon which the machine can be slid along easily after each cut is completed, the machine resting at the front end on an oak shoe covered with boiler-plate, thus forming a smooth surface upon which to slide when being moved. By means of a rear jack *a*, which is braced firmly against the roof, and the front jack *b*, which is braced firmly against the face of the coal, the machine is held rigidly in place and is prevented from moving in any direction. Two men are required for each machine, an operator, shown in the figure, and a helper. As the chain drags the cuttings out, it is the helper's duty to shovel them back and help the operator move the machine from time to time along the face of the room as each cut is finished. When the room is entirely undercut, the machine is again loaded on the truck and taken to the next room, where the same operation is performed.

11. The cut made by the chain machine is of the same height from front to rear. The average cut of a chain machine is 6 feet deep, 44 inches wide, and 4½ or 5 inches

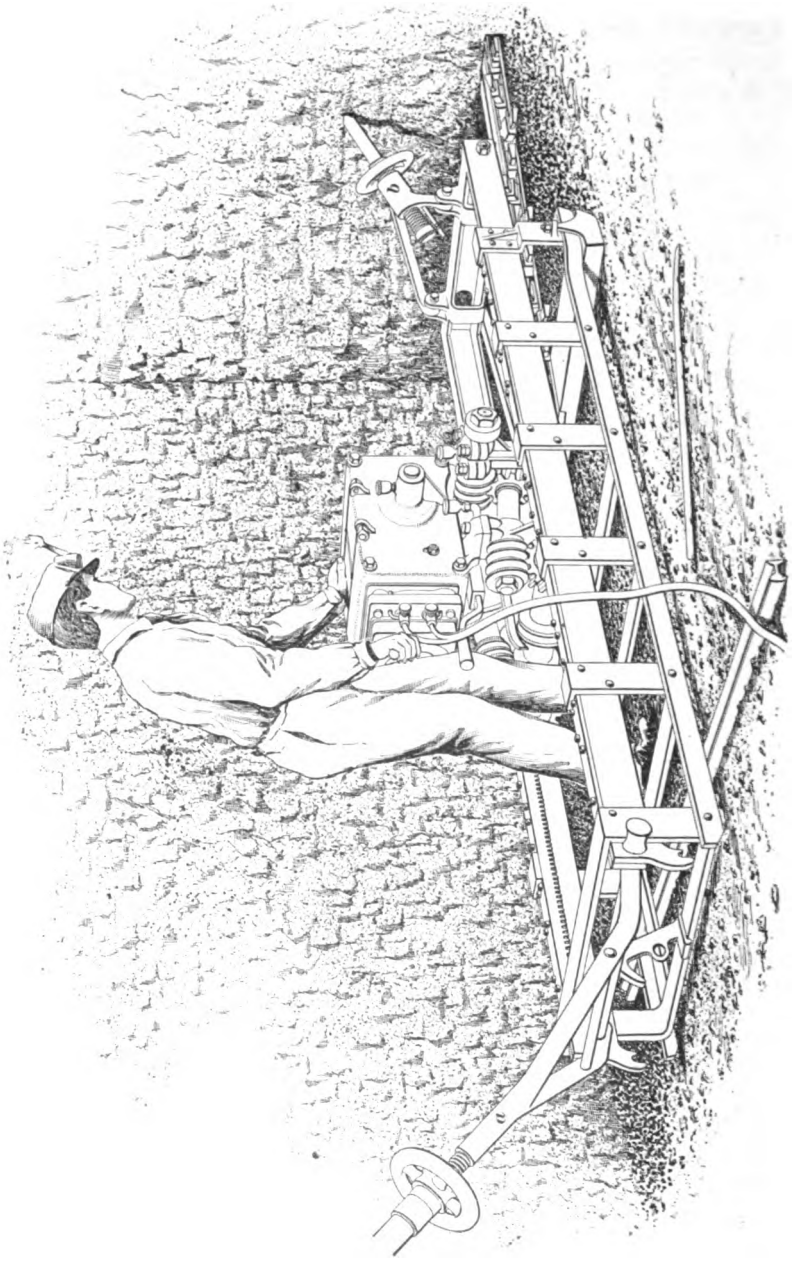

FIG. 6.

high. For such a depth the height of the cut is very low, and the amount of small coal made is but 60 per cent. of that made with pick machines. This is not always an advantage. With some coals this small cut is not enough to allow the coal to fall down and out after the blast. It frequently is necessary for the miners to break down a portion of the coal above and near the front of the cut or lift some of the coal left on the bottom in order to permit the coal to fall well for loading.

On account of the nature of the work, the machines are built to stand a good deal of rough usage, but it is well to impress upon the runner the necessity of taking proper care of his machine. The motor in each of the machines described is protected by a dust and water proof casing, and care must be taken to keep it so, and such bearings as are necessarily exposed to the dust of the mine should be frequently cleaned and kept well oiled. The bits should not be allowed to get very dull. One of the duties of the pit boss should be to see that the runner keeps his machine in good working order, and that the supply wire from the entry to the machine is properly insulated at all times.

12. The height of the seam influences the facility with which the machine can be operated. In a 3½-foot seam three men are usually required to handle a machine to advantage. About 35 cuts per shift of 10 hours can be made under such circumstances, provided other conditions are favorable, while in high seams two men handling the same kind of a machine can make about 60 cuts per shift, and under exceptionally favorable conditions, records of from 80 to 120 cuts per shift have been made. The most suitable height of seam for machine mining is about 5 feet.

13. When a ball of sulphur is encountered and the machine is stopped by the obstruction or by the operator as soon as he notices that it is being damaged and not likely to remove the hard material, it is often found effective to reverse the machine, in order to clean out the cut, and remove some of the cutters which come directly in contact

with the sulphur ball, and finally start the machine forwards again. In this way the cutters that are left cut over or under the sulphur ball and those which are in line with it will suddenly take a deep hold, and on account of the increased speed of the machine, possibly remove the sulphur entirely and in one piece. The dull and broken cutters are in low seams usually replaced with sharp ones when the machine is on the heading between the rooms, as the men have here plenty of room to work. This does not interfere with the gathering drivers, as the undercutting is generally done at night, because the miners who are paid by the ton for shooting down the coal and loading it into the mine cars object to the machines being brought into the rooms while they are at work.

14. The truck shown in Fig. 7 is the one most commonly used with the cutting machines. In loading the machine,

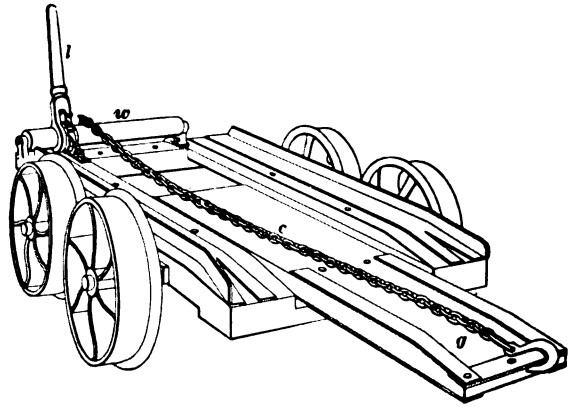

FIG. 7.

the guide *g* of the truck is lowered, so that the rear of the machine will readily slide on to it, and a hook attached to the chain *c* is placed in the ring provided for it in the brace *v*, Fig. 1, at the rear of the machine, which is finally drawn on to the truck by means of the windlass *w* that is operated by the ratchet-lever *l*, and when in position is ready to be moved.

15. Fig. 8 shows a power truck which is operated by the motor of the machine. This truck consists of a well-built frame mounted upon axles and fitted with wheels. A spool with ratchet-wheel, pawl, lever, and chain is mounted on one end in the same manner as on the standard truck.

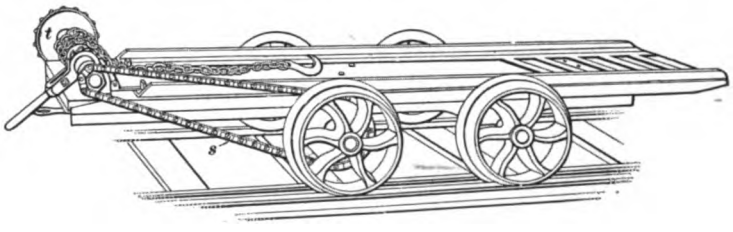

FIG. 8.

Power is transmitted by a chain to the sprocket-wheel *t*, and thence to the truck wheels by means of the chain *s*. The machine is equipped with a clutch, which can be thrown in and out of gear when necessary. When it is desired to utilize the power of the motor to propel the truck, the motor is thrown out of gear with the cutting part of the machine, so that when moving from point to point about the mine, no part of the machine is in motion except that which is necessary to operate the truck. The motor is equipped with a reversing-switch, which allows the truck to travel in either direction as desired. This attachment is being rapidly adopted, as it facilitates moving the machine about the mine, and being entirely independent of a horse or mule, it is especially valuable in thin veins and on heavy grades.

CHAIN-SHEARING MACHINES.

16. Fig. 9 shows an electric chain-cutter shearing machine, which is used principally for entry driving or turning off rooms from the butt entries; it is also used for shearing in rooms when it is difficult to make lump coal by blasting the **tight**, as the miners term the first shot in blasting down the coal over the undercut. Without the use of shearing

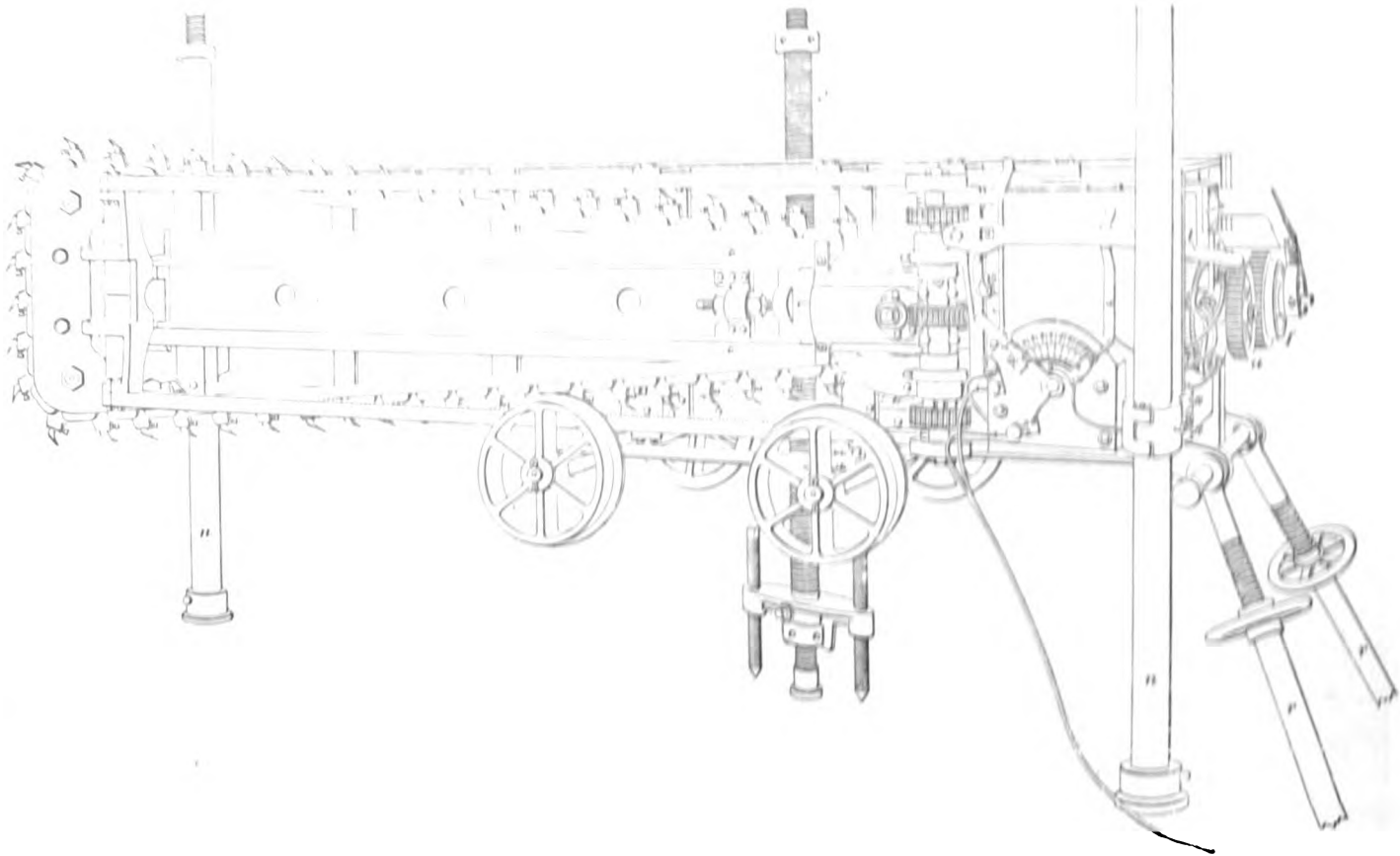

FIG. 9.

machines, most of the coal mined in narrow work is quite fine, because so much powder is required to bring it down. This is especially true of the coal made by the tight shot in narrow work.

This machine is essentially the same as that shown in Fig. 2, except that it is mounted on its edge on a truck and provided with gear mechanism for raising it when necessary. This mechanism is driven by the motor, and consists of the spur-gears *a* at the rear of the machine and a rod that runs from these gears back to the column *p*, which is provided with coarse threads. On the end of this rod there is a worm that engages a worm-wheel screwed on the column *p*. When it is desired to raise or lower the machine, this set of gears is made to turn the rod and worm-wheel by throwing in the friction-clutch *f* by means of the lever *l*. As the worm-wheel is turned in the proper direction to raise the machine, it presses against a shoulder or cup so pivoted that the machine may slightly turn on a longitudinal axis without detriment to any part of the hoisting device. The machine is further steadied by the columns *u* on opposite sides and the rear jacks *r*. It will be noticed that the truck is rigidly attached to the machine. Before making a shearing in an entry, for instance, the road can be temporarily shoved to one side, whereby the machine can be run directly to the proper place to commence work. The action and method of operating this machine are precisely the same as that described for other chain-cutter machines. Each cut made by this shearer is 7 feet deep and 3 feet high if desired.

17. Another type of shearing machines is shown in Fig. 10. This machine is supported on four columns or jacks and is provided with mechanism for raising and lowering it. The construction is quite similar to the chain-cutter mining machine. There is a bed-frame, sliding chain-cutter frame, and a motor carriage. The bed-frame consists of two rectangular steel channel-bars and two steel angle-bars firmly fastened together by means of heavy cast-steel braces. A heavy steel casting joins the channel-bars at the

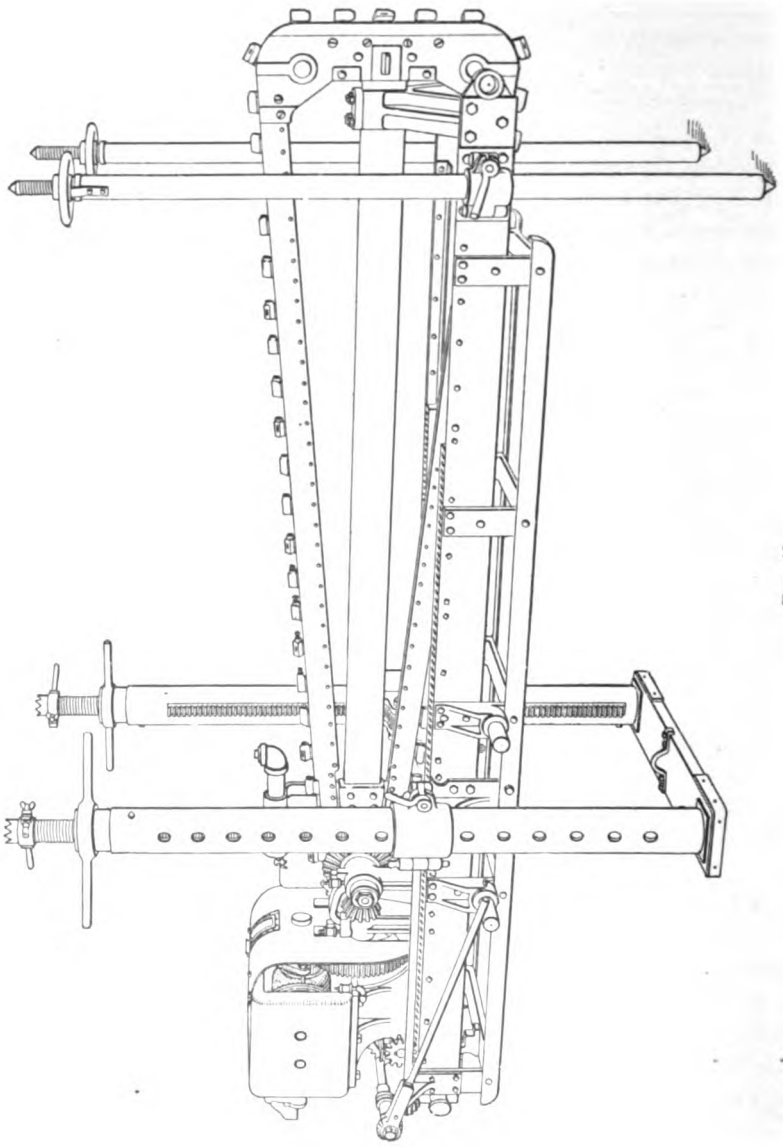

FIG. 10.

front end of the bed-frame and forms the jib or guide for the cutter frame. At the front extremity of the channel-bars two lugs are riveted for supporting the split clamp for the front jack. The supports for the main jacks are located between the center and the rear of the bed-frame, and the bearings for the truck wheels are placed on each side of these supports. The cutter frame consists of a steel center rail, a cutter head, and two steel guides in which the cutter chain runs.

The motor is of the four-pole type with Gramme ring armature and two field coils. The frame consists of one casting, which protects the armature and coils from water and falls of roof.

To operate this machine, it is first placed in position on the floor, the jacks properly set and adjusted, and the machine raised to the top of the vein where the first cut is made. Each cut is 7 feet deep, 3 feet high, and 4 inches wide, and can be made in from 6 to 7 minutes.

CONDITIONS FAVORABLE AND UNFAVORABLE TO CHAIN-CUTTING MACHINES.

18. The careful study of conditions and the rapid development of the undercutting chain machine has made it possible to mine coal with this type of machine under almost all conditions, as machines are built for both thick and thin seams, to cut in hard material by varying the speed of the moving parts, and, in fact, to be used, we might say, in any district where bituminous coal is being produced. It is true, however, that certain local conditions preclude without question the use of a machine of the chain type. Such objections are found to be large quantities of iron pyrites, occurring in the form of a ball or slab at the bottom of the vein where the cutting is done, sharp rolls in the floor causing the cutting to be done in the very hard material of which these rolls are composed, and where the roof is bad enough to require the props to be set very close to the

face of the coal, thus not allowing enough room in which to work the machine. Also, when the inclination of the vein exceeds 12 or 15 degrees, the use of chain machines is impossible. Even at a dip of 12 degrees, working with a chain machine is frequently difficult and unsatisfactory. To obtain the best results, the floor should be level or nearly so.

In some cases pick machines have been used in mines having a dip of 23 degrees, but the work was slow and difficult, and only the high price of labor made them profitable. Manufacturers do not care to run the risk of failure in installing machines in mines having an inclination of 15 degrees. The first two conditions mentioned militate against the use of the chain machine, in that the cutters are not capable of disintegrating the material, and either break or are ground off; after the cutters are incapable of cutting, the machine is fed into the material with such force that great strains and stresses are thrown on the various parts of the machine, and unless care is exercised by the runner, damage will be done. While the above conditions may exist to some extent in any mine, it does not necessarily follow that the simple fact of their occurrence decides the question of mining by machines, and before deciding whether or not machine mining is practical, a careful investigation should be made by one who is familiar with the use of machines.

Where most of the mining is done on pillars, as in old workings, the chain cutter is seldom used. The great weight on the coal presses it down upon the machine, and after having made a cut it may not be possible to withdraw, in which case it is necessary to dig the sliding frame of the machine out with a pick. There is also danger of damaging the machine when using it for this kind of work. Under these conditions, it is more economical to use the pick machine or mine by hand. A similar objection works against the chain-breast machines for longwall mining, as too much space is required for them between the gob and the face of the coal. With a wide space between the gob and the face, the pressure of the roof is apt to squeeze the coal and wedge the machine.

WORKING CAPACITY OF CHAIN CUTTERS.

19. As the conditions under which a machine is operating determines the amount of work which it can do, it is possible to give but an approximate idea of the capacity of one of these machines. It is safe to say that where the chain machine can be used it will make from 30 to 40 cuts per day, each cut being 44 inches wide and 5, 6, or 7 feet deep. Allowing for lap in cuts, this would amount to from 100 to 150 lineal feet along the face, or from 500 to 1,000 square feet undercut. The record for cutting with a machine of the chain type is 104 cuts 6 feet deep in 9 hours and 40 minutes, the distance cut along the face being 333 lineal feet. In doing this work, the machine was moved six times and cut both rooms and narrow places.

LONGWALL MINING MACHINE.

20. Mining by machinery having been adopted so extensively has been the cause of developing machines adapted to each system. The longwall system of mining by hand has proved itself to be the most economical where the conditions are such that this system can be followed. Being the most economical to work by hand, the longwall system would naturally offer advantages to machinery which was particularly adapted for it, and a study of this system has developed a machine of the longwall type. The time required to shift a machine of the chain-breast type is so great that one of this kind could not be used, and a machine so constructed that it could cut continually along the face was designed.

21. Fig. 11 shows one of these machines. As will be observed, it is very compact, and is so constructed that maximum strength is contained in minimum space. The machine consists essentially of three parts: the motor, driving mechanism, and feeding gear. These are mounted upon two cast-steel angles, which run the entire length of the machine. The motor is bolted to the angles in the middle,

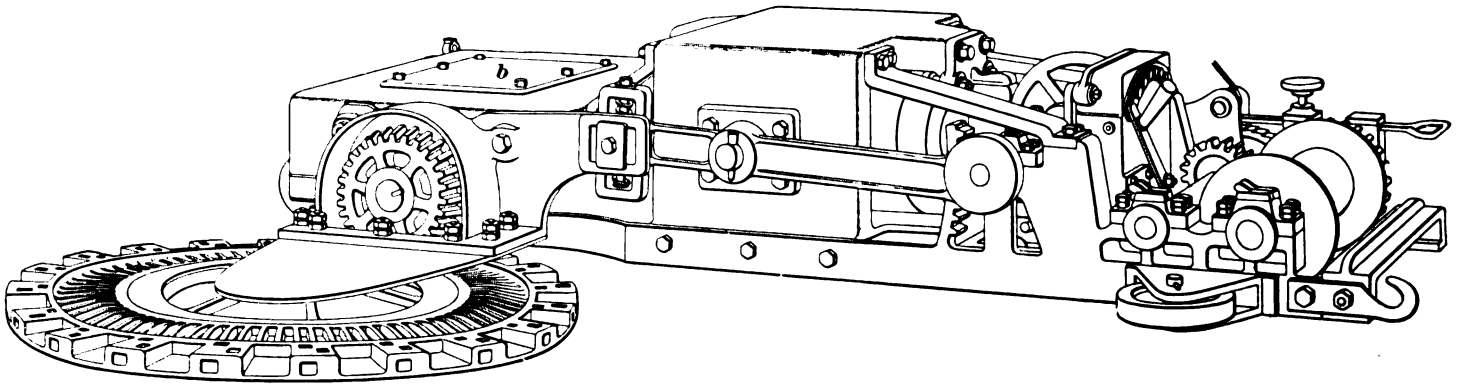

FIG. 11.

the driving mechanism is at one end, and the feeding gear at the other; these are further held together by braces, so that the machine is thoroughly strengthened throughout. At the front left-hand corner of the machine is located the cutter wheel. This is made of malleable iron, cast so that the teeth in which the driving pinion meshes form a part of its periphery; outside of these teeth are the heavy lugs in which the cutters are inserted. The wheel is supported by a heavy steel plate projecting from and bolted to the main portion of the machine.

The motor is of the multipolar type, having an iron-clad armature and two field coils. The armature lies in a position parallel to the length of the machine. A bevel pinion on the end of the armature shaft meshes with a large bevel-gear, which is mounted on a shaft at right angles to the armature shaft and which carries a bevel pinion meshing in the teeth of the large cutter wheel. On the same shaft at the opposite end is a pinion which meshes with a spur gear, driving a shaft to which is attached an eccentric. To this eccentric is attached a rod which passes along the side of the machine to a cross-head, to which is attached a connecting-rod driving a ratchet, which in turn drives a ratchet-wheel geared by a single reduction to a drum, upon which is wound a rope by which the machine is drawn or fed forwards.

The cutter wheels are built of different sizes to cut from 3 to 5 feet deep, the depth of cut depending entirely upon the conditions. The width over all of the machine when the cutter wheel is embedded in the coal is 3 feet 8 inches; its total length is 7 feet 9 inches; its total height is about 18¾ inches.

The feeding mechanism, which has already been described, is variable, allowing the rate of winding the cable on the drum to be changed at will to 8, 16, or 25 inches per minute. The wire cable is run along the face of the coal as far as is desired, then passed around a sheave attached to a jack rigidly set between the roof and the floor, and then back to the machine, where it is hooked on the frame at the hook shown near the drum.

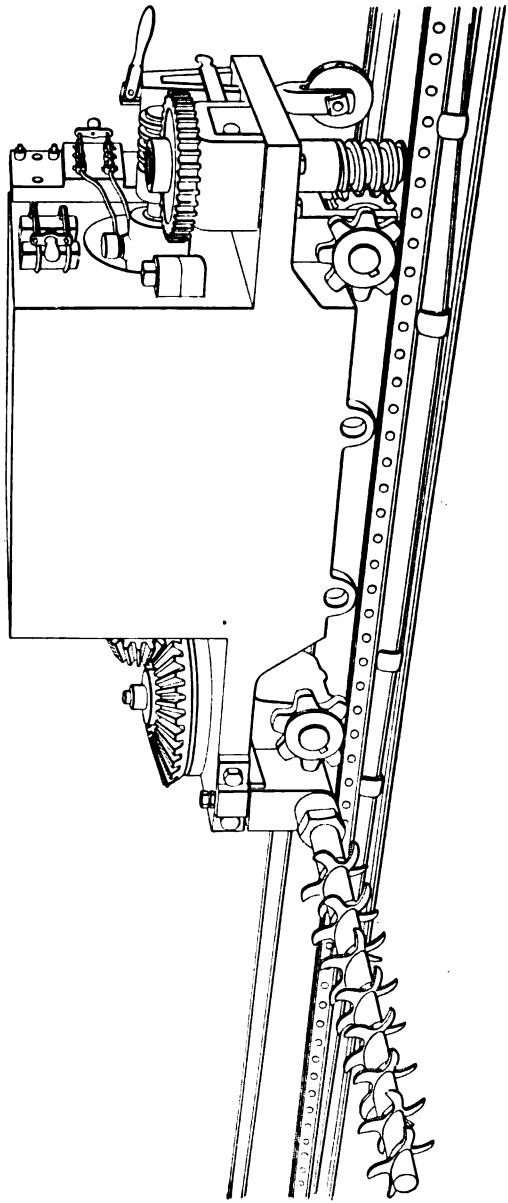

FIG. 12.

The cast-steel box *b* completely encases the gearing and is made oil-tight, so that the gears can be run in oil and any possibility of cutting avoided.

This machine, when in operation, is mounted on a single track or rail, and is known as the single-track type. The rail upon which it travels is held in place by suitably arranged jacks braced against the roof, and consists of two flat bars of iron, one 2 in. × ½ in. riveted upon the other, which is 4 in. × ½ in., the machine resting upon these by two flanged idlers, one at each end of the machine.

The operator, whose duty it is to see that the machine is working properly and to regulate the speed of feeding, can, by means of a hand-wheel, adjust the angle of the cutter wheel with respect to the horizontal, thus making it possible to cut close to the bottom and avoid any impurities which may be encountered, at the same time being able to follow the formation of the bottom or floor.

In addition to the operator, at least two men are required to lay track and remove obstructions.

This machine has been adopted to a limited extent in the United States and very generally abroad.

22. Another type of longwall machine which has recently been successfully introduced into some of the thin-vein mines of the Western fields is shown in Fig. 12. This machine has for its cutting mechanism an extension arm, around which is wound a spiral band of steel with 42 projecting teeth. In addition to cutting the coal, this spiral device acts as a screw conveyer in cleaning out the under cut. The arm can be turned on a pivot, so as to extend from the rear of the wheel for renewal of the spiral band and for starting the cut without recourse to hand picking. The motor is operated on a two-rail track, the rail next the coal being composed of two pieces of angle-bars held 1⅛ inches apart by shouldered rivets set at intervals of 1½ inches. This gives the effect of a rack bar, which meshes with the toothed wheels on that side of the motor. The outside rail and wheels are plain. By means of the handle shown above the right-hand upper

wheel, the cutting bar may be made to operate up or down from a horizontal plane, cutting over or under obstructions in the coal, and avoiding irregularities in the floor. Each outer wheel can be raised or lowered separately.

Two sets of rail are used, one being taken up and reset.

THE CUTTER-BAR MACHINES.

23. The first electric chain-breast machine was put on the market in 1894, and almost simultaneously by three manufacturing concerns. Five years before, electricity had been successfully applied to a different type of coal-cutting machine, which had previously been operated solely by compressed air. This machine was what was known as the cutter bar. With the introduction of the chain-cutting machine, the cutter bar became obsolete and its manufacture abruptly ceased; but as some of these machines are still in operation in a few mines in the Western States, and as they mark an important step in the evolution of the successful machine, the student should have some knowledge of their construction.

The stationary frame of the cutter-bar machine was not materially different from that of the present chain machine, and the perfected type possessed a rack-and-pinion feed mechanism similar to that in use on the chain machines. The difference lay in the cutting mechanism itself and the direction of its movement. The cutting tool consisted of a rotating bar of steel extending across the forward end of the machine. The cutting teeth were inserted in its circumference, the second being slightly behind and a little to the side of the first, and so on, so that the line followed by the teeth was that of the thread of a screw. The bar was rotated by an endless chain driven by sprockets attached to the main driving shaft of the machine.

It will be observed that in this machine the coal was attacked in a direction at right angles to that of the chain machine. The power required to operate it was

considerably more than that necessary for the chain machine, its rapidity of cutting was less than the chain machine, and more difficulty was experienced in keeping the cut free of dirt. The first of these machines was made in 1876, the last one in 1894

PICK MACHINES.

24. In applying mechanical means for the production of coal, the natural form of machine was one built to attack the coal in a manner similar to that of the miner with his pick, and this idea eventually produced the machine which is commonly known as the "pick" or "puncher" machine, and which is the one that was first adopted for mining coal. The difficulty of transforming a rotary to a reciprocating motion has caused many of the efforts to build a practical electric pick machine to be unsuccessful; but such a machine has been built, and the following is a description of its working and construction. There is a wide field for electric machines of this type.

DESCRIPTION OF A PICK MACHINE.

25. Fig. 13 shows an electric pick machine which has a reciprocating piston actuated by a spring and cam, the spring striking the blow and the cam drawing the piston back. The cam is driven by a motor *m* of the toothed

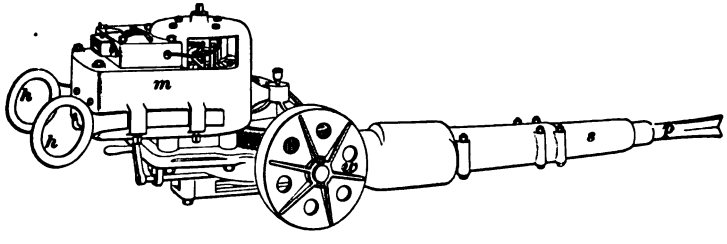

FIG. 13.

Gramme ring type. The important feature is the manner of connection of commutator to coils, there being no wire

connections at this point, which makes the armature as nearly indestructible as possible. The pick *p* is attached to the outer end of the piston, which is supported by the sleeve *s*.

The machine weighs 750 pounds and is mounted on wheels *w*. It is controlled, while working, by the handles *h*. Its length is 7 feet and its width over the wheels 21 inches. The piston makes from 175 to 225 8-inch strokes per minute.

METHOD OF OPERATING PICK MACHINES.

26. Fig. 14 shows a pick machine at work where props are set up close to the working-face. It will be noticed

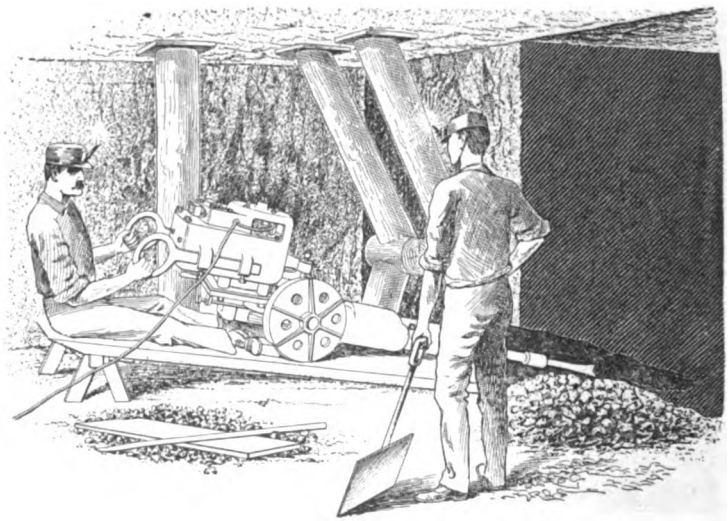

FIG. 14.

that the machine is placed upon a platform which is inclined towards the face, so as to neutralize the recoil of the machine by gravity and at the same time enable the operator to advance the machine easily as the cut deepens. The pick strikes from 175 to 225 blows per minute as desired, and while in operation the runner directs each blow by taking hold of both handles and sitting upon the platform just back

of the machine. When necessary he prevents the machine from running back by pushing a block of wood, or simply by placing the heel of his shoe, under one wheel with his foot. (He usually uses a wooden "chock" fastened to the bottom of his shoe.) Only two men are required to operate the machine, one skilled as runner and an ordinary laborer as helper, who shovels away the slack or cuttings from the machine and assists in placing the platforms. In order that the machine can be kept continuously at work, two platforms are used. While the one is in use the helper places the other one alongside of it, so that the operator can run the machine off the one on to the other whenever a cut is completed.

27. In making an undercut, the runner directs the machine so as to make a groove at the bottom of the coal about 1 foot deep and 3 or 4 feet along the face, according to the width of the platform and size of the machine. This groove is then enlarged by blocking down some of the coal, after which the same operation is repeated until the required depth is reached. When finished the front of the cut is about 12 inches high and the back about 2 inches high. This gives the cut a **V** shape, and causes the coal when blasted down with as light a charge of powder as possible to roll over in such a manner that the loaders can readily attack it.

28. Pick machines being mounted on wheels can easily be shifted or run from one room to another through the cross-cuts or break-throughs by the workmen, and in this respect they are more convenient than other types, which require mechanical means at all times to shift or transport them. Frequently, however, pick machines are run on to a truck for transportation.

29. Fig. 15 shows a pick machine mounted on large wheels for shearing or making vertical cuts in the coal. This machine is in all respects similar to the one already

described, except that the wheels *w* are 40 inches in diameter. It will shear 4½ feet deep and 4½ feet high, or higher, if the platform is placed on slack.

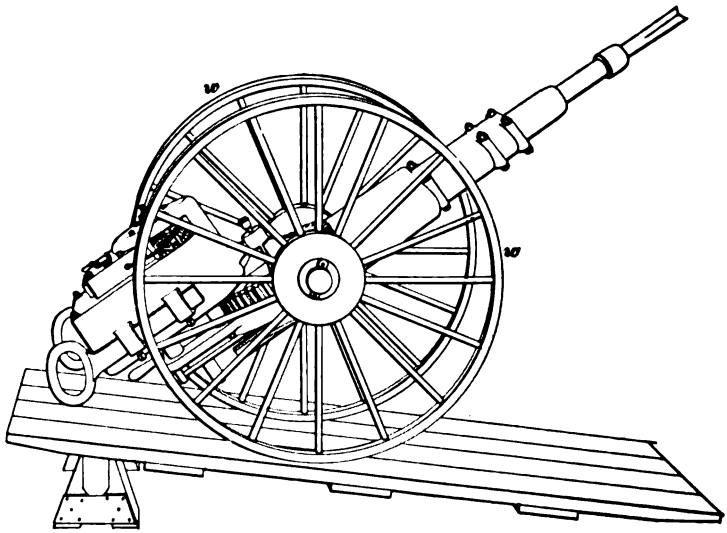

FIG. 15.

30. Fig. 16 shows a machine in position for making a shearing on one side of an entry. It will be noticed that the lower portion of the shearing is made wide enough for the wheels to enter. The operation of the machine for shearing is the same as for undercutting. The shearing is made after the undercut is finished by simply replacing the small wheels with the large ones and operating the machine to form a vertical cut, usually along the side, instead of a horizontal one along the bottom, as is done in regular undercutting. The truck *t* is used to carry the machine from place to place. It is more expensive to shear coal than to blast it, but more lump coal is produced with the shearer, and the air at the working-face is rendered impure by the gases formed by blasting.

CONDITIONS FAVORABLE AND UNFAVORABLE TO PICK MACHINES.

31. The pick machine can be used under all conditions favorable to mechanical methods of mining coal, and the only conditions which preclude its use where undercutting

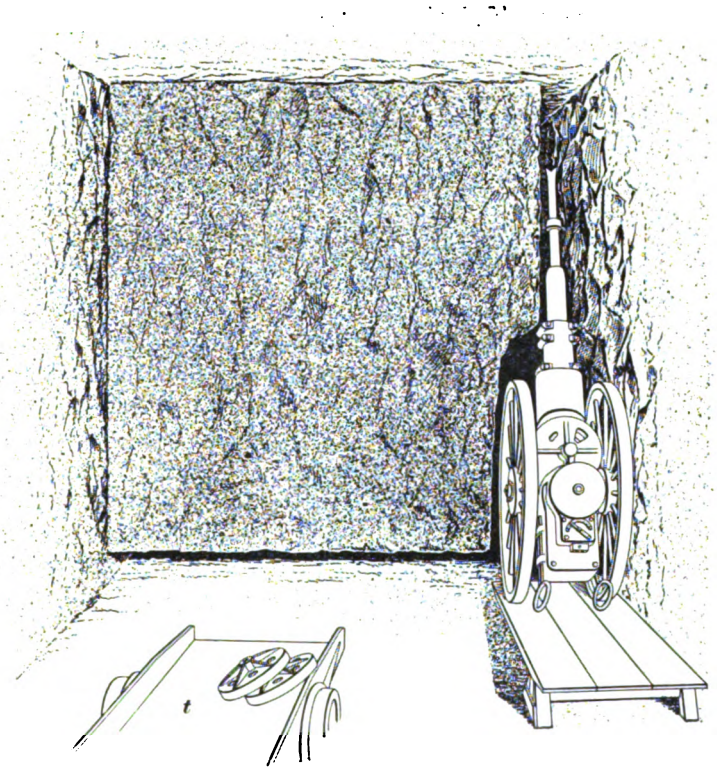

FIG. 16.

is necessary are too great a pitch, too low a seam, and bad roof where props must be set up close to the face and in great numbers. This latter condition affects the pick machine less than other types of coal-cutting machinery, as may be seen by referring to Fig. 14, where a machine is

shown at work among props and cockermegs used to support the undercut portion of the coal.

32. It can be seen from the construction and method of operating pick machines that they can cut the coal surrounding any hard foreign matter which may be embedded in the coal, and therefore remove such material without injury to the machine. For this reason pick machines are suitable for working seams of coal containing balls of iron pyrites, which will blunt or destroy any steel-cutting tool with which they come in contact. It is also evident that pick machines are suited to undercut coal on which there is a squeeze.

WORKING CAPACITY OF PICK MACHINES.

33. The amount of undercutting that can be done with any pick machine depends upon the lay and nature of the coal mined and the tact of the runner. A good electric pick machine will undercut about 450 square feet in 10 hours if handled properly, when a miner doing nothing else could undercut only about 120 square feet. In other words, pick machines will each cut from 50 to 100 tons of coal per day of 10 hours in seams varying in thickness from 4½ to 6 feet. The cost of cutting coal with pick machines in seams 4½ feet is approximately 10 cents per ton.

The figures given must not be confounded with phenomenal records which have been made, and which are the exception and not the rule. In Western Pennsylvania a compressed-air pick machine has undercut as much as 1,400 square feet in 9 hours, and in an 8-foot seam has mined as high as 240 tons per shift of 10 hours.

34. The student should carefully notice that the force with which the pick strikes depends upon the distance it penetrates the coal. For example, if the pick struck soft "mother coal" it would penetrate it for perhaps 1 foot, while if it struck hard rock it would only penetrate it for perhaps ¼ of an inch. In either case the energy stored up

at impact would be given up in a distance equal to the depth of the cut, and therefore since it requires a greater resistance to stop the pick in ¼ of an inch than in 1 foot, it is clear that the blow is much greater on the rock than on the mother coal, although the work done on each is the same.

GENERAL REMARKS.

35. Whatever the methods of undercutting, a greater proportion of lump coal will be obtained in the high seams, and for this reason the output of screened coal per machine will be much greater in thick than in thin veins. But the increased cost of mining thin veins by hand makes the advantages of machine mining in thin veins much greater than in thick ones. It will be seen by referring to Fig. 17 that the amounts of coal made fine by undercutting in two seams *A* and *B* are equal, because the undercuts are the same size, which is generally so in practice. It is best to undercut a seam of coal at least to a depth equal to its height, in order to get the best results from blasting. When this is done and the undercuts are V shaped, as shown, the ratio of the small coal to the lump is approximately the same for all seams.

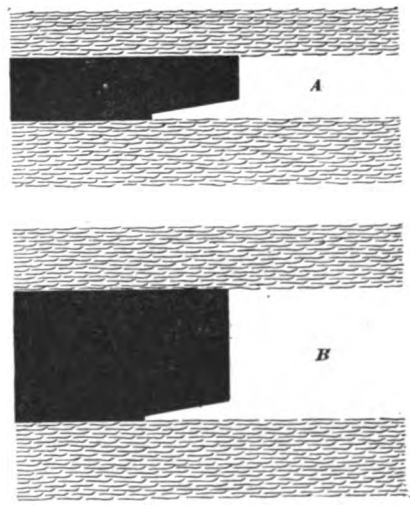

FIG. 17.

36. From the foregoing it will be plainly seen that each mine must adopt the machinery which is especially suited to its conditions and that there is hardly a mine to which some form of machine can not be applied. Where it is

possible to have a long working-face, it is more economical to take advantage of this feature, as the machine can be kept constantly at work and less time consumed in moving. But where this can not be done, it simply remains to select the best form of machine for the conditions. There is no doubt that future methods of working coal will be modified to suit mechanical mining, for even with the present methods, mechanical mining has proved to be economical, and with the perfection which has been reached in the construction of machinery for this purpose, it is safe to predict that great reductions in the cost of production will be made in the future by the adoption of new methods of mining and the construction of new machinery.

A SERIES

OF

QUESTIONS AND EXAMPLES

RELATING TO THE SUBJECTS
TREATED OF IN THIS VOLUME.

It will be noticed that the various Question Papers that follow have been given the same section numbers as the Instruction Papers to which they refer. No attempt should be made to answer any of the questions or to solve any of the examples until the Instruction Paper having the same section number as the Question Paper in which the questions or examples occur has been carefully studied.

PERCUSSIVE AND ROTARY BORING.

(1) State the principal uses of bore holes.

(2) What is percussive boring?

(3) What are the essential parts of a diamond drill?

(4) What are intermittent cutters? State their characteristics.

(5) Describe the hydraulic feed.

(6) How does a driller determine whether or not he is using a jumper or churn drill of the proper weight?

(7) Describe the differential feed.

(8) Upon what does the form of the cutting edge of a percussive bit depend?

(9) Of what are the diamonds used in diamond drilling composed, and what kinds are used?

(10) If the velocities at impact are the same, how do the cutting forces vary, providing the weights are different?

(11) For what can hand-power drills be employed, and what is their capacity?

(12) What are the guides by which the progress of the diamond drill is judged?

(13) For a hole requiring a set of bits, why is it that each bit should be slightly smaller than the one it follows?

(14) Why is it that the drifting is always worse when employing an old or worn core-barrel?

(15) State the principal features and dimensions of the standard type of power percussive rock-drills.

(16) Describe the setting of a diamond bit.

(17) How is the core removed from a diamond-drill hole?

(18) For a given amount of power, what relation should exist between the frequency and force of each blow in order to do the most effective work?

(19) What is the difference between the Kind-Chaudron and the American method of boring?

(20) Explain the action of the jars in drilling.

(21) Define rotary boring.

(22) For what special purpose is the ratchet used?

(23) What are the functions of the sinker-bar and the auger-stem?

(24) What two styles of feed mechanism are employed to force the diamond bit to its work?

(25) When a diamond-drilling machine is provided with a fixed head, how is the driving mechanism removed from over the hole, and what does this necessitate in regard to the steam-pipe connections?

(26) Give the order of the tools in a hole being bored by an American rig.

(27) State the principle by which an electric percussive drill is made to operate.

(28) What is the chief use of hand-drilling machines for rotary boring? Describe each class.

(29) What determines the height of a derrick?

(30) What relation should exist between the angle through which a percussive drill should be turned and the depth of cut?

(31) Name the kinds of drills used in percussive boring.

(32) What is (*a*) a stand-pipe? (*b*) a casing?

(33) Describe the swinging head as applied to the diamond drill, and state its use.

(34) In boring holes of different diameters in the same rock, what relation should exist between the angles through which the bits are turned in the holes?

(35) Describe the spring-pole method of boring.

(36) What part of the cutting edge of a percussive bit does the least amount of work, and why?

(37) When should the cutting edge of a percussive bit form an acute angle in cross-section, and when an obtuse angle?

(38) Under what circumstances are hand-power percussive drills used?

(39) How is fitchering prevented while starting a hole?

(40) What is the use of the temper-screw?

(41) In what kind of rock is it advantageous to use a flat-edged bit?

(42) How is the cutting edge of a percussive bit formed to drill in rock having narrow cracks in it?

(43) Describe the method of surveying a diamond-drill hole by means of plummets and magnetic needles.

(44) In what direction do inclined diamond-drill holes have a tendency to drift?

(45) What must be provided for a diamond-drilling plant which is to operate from the surface?

(46) What is meant by lost water?

(47) What disadvantage is there in using **Z** bits?

(48) How does diamond-drill work carried on underground, as in a mine, differ from that carried on at the surface?

(49) How are straight-edged bits dressed up, and what special tools are used to sharpen and shape double-edged bits?

(50) When drilling in soluble material, how can the driller prevent it from being dissolved?

(51) What relation is there between the value of the record furnished by the diamond drill and the character of the deposit sought as to its physical characteristics?

(52) What advantage is there in using double-edged bits?

(53) What effect has the length of stroke upon the cutting force of a percussive bit, providing the actuating force remains the same?

(54) What records should be kept concerning the diamond-drill hole?

(55) What is the result of using a light hammer to strike a relatively heavy drill?

(56) Why is the X bit a better form than the + bit?

(57) State requirements of a good percussive power drill.

(58) Why are dead weights used on the tripod of a power percussive drill?

(59) Describe the method of surveying a diamond-drill hole where there is magnetic attraction.

(60) What means are employed to fix drilling columns rigidly in place?

(61) Under what conditions are holes drilled with a percussive bit most likely to be deflected from a vertical line?

(62) Why are posts or grips necessary for rotary drills?

(63) What is a fishing tap, and for what is it employed?

(64) For what purpose is Miller's patent spudding attachment used?

(65) Give the probable cause of drift in a diamond-drill hole.

(66) Explain the action of a reamer which acts percussively.

(67) What relation should exist between the total weight of a percussive power drill and the steam or air pressure upon the piston-head, and why?

(68) What are the advantages and disadvantages of carrying on diamond drilling from the bottom of a drilling pit?

(69) Give the number of strokes per minute for large and for small power percussive drills.

(70) Why is it best to use a set of drills rather than a single drill for boring holes with hand-power rotary drills?

(71) What size of casing with respect to the hole is used, and how are crevices in the hole closed to shut out water?

(72) What causes the drill-rods in diamond drilling to part?

(73) Describe a power percussive drill.

(74) What two classes of hammers are used in drilling? Explain the manner of using each.

(75) What general rule can be given with regard to the size of a diamond bit to use?

(76) What are some of the special advantages possessed by the diamond drill for prospecting?

(77) In what respect do the various power percussive drills differ most widely?

(78) Explain the construction and use of a diamond reaming bit.

(79) Why is it that two men can do proportionally more work than one man when a comparatively heavy churn-drill is used?

(80) In what case is a churn-drill most effective, and for what kind of work is it least efficient?

(81) To what is the dissipation of energy proportional when a hammer strikes a drill?

(82) Why is the material at the middle of some forms of percussive bits reduced?

(83) When is it advantageous to enlarge a churn-drill near its middle?

(84) Define (*a*) tempering; (*b*) annealing.

(85) What points should be observed in tempering a drill?

(86) What can you say in regard to the temperature of steel of different qualities when heated to the same color?

(87) Give the order of the running colors when the steel is heated to a dull redness.

(88) What is the use of the drive tube?

(89) How are lost bits recovered?

(90) Which is the more important, accuracy or speed, in diamond-drill work, and why?

COMPRESSED-AIR COAL-CUTTING MACHINERY.

(1) What is, in general, the most difficult and expensive operation in coal-mining ?

(2) State the two great powers used to operate coal-cutting machines.

(3) Which is the more economical, to use air under low or under high pressure for running coal-cutting machines, and why ?

(4) Describe briefly a pick machine.

(5) What form of a working-face is the most suitable for machine mining, and why ?

(6) Upon what does the force of a pick machine largely depend ?

(7) For what kind of work are shearing-machines best suited ?

(8) Explain the method of moving chain-cutter machines from place to place.

(9) How is coal removed from its solid state in the mine ?

(10) What advantages are there, with regard to ventilation, in the use of compressed air for running coal-cutting machines ?

(11) What features make a pick machine suitable for mining almost any seam of coal where mechanical methods are at all applicable ?

(12) Explain the method of operating a pick machine.

(13) What depth of undercut gives best results?

(14) The diameter of the piston of a pick machine is 4 inches, the weight of the piston and pick is 250 pounds, the length of stroke is 12 inches, and the air-pressure is 80 pounds per square inch. What is the velocity of the pick at impact? Ans. 16.08 ft. per sec.

(15) Describe a chain-cutter machine.

(16) With what special feature is the bed-frame of a chain-cutter machine for working in low seams provided?

(17) Give the working capacity of a good chain-cutter machine.

(18) State conditions favorable and unfavorable to chain-cutter machines.

(19) Explain the construction of the cutter-bar machine.

(20) For what reasons can we infer that machine mining will largely replace hand methods?

(21) How is the compressed air furnished for the machines?

(22) What advantage is there in having an adjustable cut-off on pick machines?

(23) What relation should exist between the force and the number of blows of a pick machine in order to get the greatest amount of useful work from a given power?

(24) For what reason are the cutters of a chain-cutter machine made detachable, and by what means are they held in place?

(25) What gives the greatest trouble in handling chain-cutter machines?

(26) State the principle on which the auger machine is made.

(27) Into what two classes may coal-cutting machines be divided?

(28) By what means is the compressed air carried from the compressor to the machines at the working-faces?

(29) State how the air is cooled during compression.

(30) How are pick machines moved from place to place?

(31) What is the working capacity of a good pick machine?

(32) What is the approximate cost per linear foot of driving heading with the Stanley header?

(33) Describe a pick or direct-acting shearing-machine.

(34) What restricts the size and weight of mining-machines?

(35) What conditions make it most economical to work a seam of coal with chain-cutter machines?

(36) If an 18-horsepower engine drives a cutter chain at the rate of 330 feet per minute, what is the cutting force of the chain? Ans. 1,800 lb.

(37) How are the machines connected to the pipe system, and what advantages are thereby gained?

(38) What is the result in case a pipe is burst by compressed air?

(39) What conditions preclude the use of pick machines?

(40) A 6-horsepower pick machine makes 200 strokes per minute; what amount of work is done per stroke by the pick? Ans. 990 ft.-lb.

(41) Explain the method of operating a pick machine.

(42) What advantage is there in cooling the air during compression?

(43) Explain the method of shearing with the ordinary pick machine.

(44) In low seams where is the undercut sometimes made?

(45) What is the cutting force of a pick machine whose pick and piston weigh 175 pounds? The pick cuts to a depth of $2\frac{1}{2}$ inches and has a velocity at impact of 22 feet per second. Ans. 6,320.9 lb.

(46) What kind of a mining-machine is best suited for working seams of coal containing considerable amounts of iron pyrites and having rolls in the bottom ?

(47) Describe briefly the Stanley header, and state its principal use.

(48) By what means is the coal sometimes loaded after the Stanley header ?

(49) What improvement in the methods of working coal-mines is such machines as the Stanley header and shearing-machines likely to accomplish ?

(50) State briefly any experience you may have had with compressed-air coal-cutting machines.

DYNAMOS AND MOTORS.

(PART 1.)

(1) Fig. 1 represents a helix of wire around which an electric current is supposed to be circulating in the direction indicated by the arrows. Which of the two ends, *a* or *b*, is the north pole of the solenoid? Why?

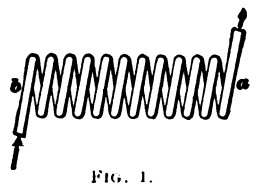

FIG. 1.

(2) (*a*) What will be the sign of the static charge developed on a glass rod when rubbed with fur? (*b*) on a piece of hard rubber when rubbed with silk? (*c*) on a piece of flannel when it is rubbed against a piece of amber? Give reasons.

(3) The electromotive force of a battery on open circuit is 20 volts and its internal resistance is 30 ohms. What will be the strength of current flowing when its poles are connected to an external resistance of 80 ohms?

Ans. .1818 ampere.

(4) The separate resistances of two branches *A* and *B* of a derived, or shunt, circuit are 16.2 and 14.1 ohms, respectively. If the sum of the currents in the two branches is 6.37 amperes, what is the current in each branch?

Ans. { 2.9643 amperes in branch *A*.
{ 3.4057 amperes in branch *B*.

(5) Express the equivalent of 2.33 horsepower in watts.

Ans. 1,738.18 watts.

(6) In a closed circuit, the resistance between two points is 2.3 ohms. (*a*) What current flowing between these points will cause a difference of potential of 58.4 volts? (*b*) What

is the power in watts dissipated between these two points? (*c*) Give its equivalent in horsepower.

Ans. { (*a*) 25.3913 amperes. (*b*) 1482.8521 watts. (*c*) 1.9877 horsepower.

(7) In a voltaic couple of zinc and platinum, which metal will be the negative element? Why?

(8) The current in a horizontal conductor is flowing from the north towards the south. In what direction will the north pole of a compass needle point if the compass is placed under the conductor?

(9) Fig. 2 represents a closed circuit consisting of a voltaic battery *B* and two conductors *X* and *Y* connected in series. The internal resistance of the battery is 17.2 ohms, and the separate resistances of the conductors *X* and *Y* are, respectively, 8.2 and 11.3 ohms. What is the total E. M. F. in volts generated by the battery if a current of .75 ampere flows through the circuit? Find the difference of potential in volts between *a* and *b*, between *b* and *c*, and between *c* and *a*.

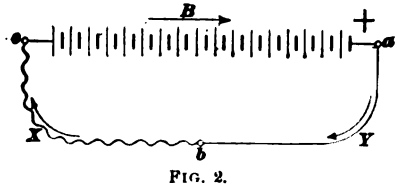

FIG. 2.

Ans { Total E. M. F. developed by battery = 27.525 volts. Difference of potential between *a* and *b* = 8.475 volts. Difference of potential between *b* and *c* = 6.15 volts. Difference of potential between *c* and *a* = 14.625 volts.

(10) If the specific resistance of silver is .5921 microhm per cubic inch, find the resistance in ohms of 1,000 feet of a round silver wire .2″ in diameter. Ans. .2262 ohm.

(11) A voltaic battery whose internal resistance is 36.2 ohms is connected to a copper wire having a resistance of 21.7 ohms. What is the total electromotive force in volts generated in the battery, if a current of .127 ampere flows through the circuit? Ans. 7.3533 volts.

(12) How many coulombs of electricity pass through a circuit in 2¼ hours when the strength of current is 8.32 amperes? Ans. 67,392 coulombs.

(13) Given, electromotive force = 112.5 volts and strength of current = 12.2 amperes; find the power in watts.
Ans. 1,372.5 watts.

(14) The separate resistances of two branches A and B of a derived, or shunt, circuit are, respectively, 2.4 and 987.3 ohms. What is their joint resistance in parallel?
Ans. 2.3941 ohms.

(15) The resistance of a copper wire is 43.2 ohms at 60° F.; find its resistance at 85° F. Ans. 45.5274 ohms.

(16) The separate resistances of three conductors A, B, and C are, respectively, 37, 45, and 72 ohms. What is their joint resistance when connected in parallel?
Ans. 15.8383 ohms.

(17) The total resistance of a closed circuit is 49.3 ohms. If the current flowing through the circuit is 2.73 amperes, what is the total E. M. F. in volts developed in the circuit?
Ans. 134.589 volts.

(18) The separate resistances of four conductors A, B, C, and D are, respectively, 3, 19, 72, and 111 ohms; find their joint resistance when connected in series. Ans. 205 ohms.

(19) (*a*) What is the total resistance of a closed circuit in which a current of 5.2 amperes is flowing and the total E. M. F. developed is 28.2 volts? (*b*) If the external resistance is 7 times the internal, what are the separate resistances of each?

Ans. { (*a*) The total resistance of the circuit = 5.423 ohms.
(*b*) The internal resistance = .677875 ohm, and the external resistance = 4.745125 ohms.

(20) How much energy in *joules* is expended in a closed circuit during 1¼ hours in which the current is maintained at 14.2 amperes, the resistance of the circuit being 8 ohms?
Ans. 7,259,040 joules.

(21) The resistance of a piece of silver wire is 214 ohms at 82° F.; find its resistance after its temperature has fallen to 50° F. Ans. 200.5608 ohms.

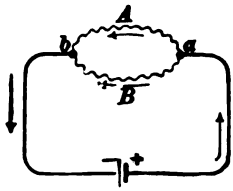

FIG. 3.

(22) In Fig. 3, the difference of potential between a and b is 11.6 volts. If the strength of the current in branch A is 6.7 amperes and the strength of the current in B is 4.9 amperes, what is the separate resistance of each branch?

Ans. { The separate resistance of branch $A = 1.7313$ ohms.
{ The separate resistance of branch $B = 2.3673$ ohms.

(23) The E. M. F. of a battery is 22.4 volts and its internal resistance is 13.4 ohms. What is the resistance of an external conductor connected to the battery when the current flowing in the circuit is .43 ampere?

Ans. 38.693 ohms.

(24) What must have been the strength of current in amperes in a closed circuit through which 368,422 coulombs of electricity passed in 4½ hours? Ans. 22.7421 amperes.

(25) Find the work done in foot-pounds when a current of 2.4 amperes flows against a resistance of 45 ohms for 50 minutes. Ans. 573,324.48 foot-pounds.

(26) Given, the electromotive force = 525 volts and strength of current = 12.5 amperes, express the number of horsepower. Ans. 8.7969 horsepower.

(27) (*a*) How many watts are dissipated by a current of 110 amperes flowing against a resistance of 4.2 ohms? (*b*) Give its equivalent in horsepower.

Ans. { (*a*) 50,820 watts.
{ (*b*) 68.1233 horsepower.

(28) The diagram in Fig. 4 represents a circular type of resistance-box with coils arranged for a Wheatstone bridge; X is an unknown resistance. Draw a diagram showing the proper connections of the battery and galvanometer circuits

and designate the upper and lower balance arms and the adjustable arm.

(29) If the resistance of 1,000 feet of round copper wire .1 in. in diameter is 1 ohm, find the resistance of 2,000 feet of square copper wire .1 in. on a side.

Ans. 1.5708 ohms.

(30) Find the equivalent of 54,200 watts in horsepower.

Ans. 72.6541 horsepower.

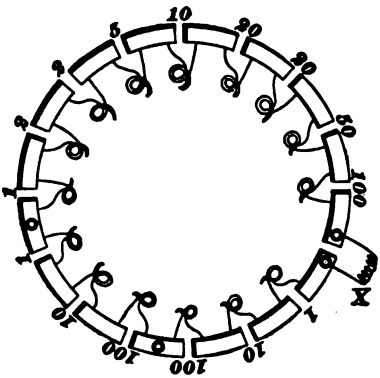

FIG. 4.

(31) The specific resistance of mercury is 37.15 microhms per cubic inch; find the resistance in ohms of a round column of mercury 72.3″ high and .04″ in diameter at 32° F.

Ans. 2.1368 ohms.

(32) The total E. M. F. developed within a battery is 45 volts and the internal resistance of the battery is 33 ohms; find the strength of current flowing when the battery is connected in circuit with a resistance of 30 ohms.

Ans. .7143 ampere.

(33) A voltmeter *V. M.*, Fig. 5, is connected to the poles *a* and *b* of a battery *B* whose circuit is open and indicates

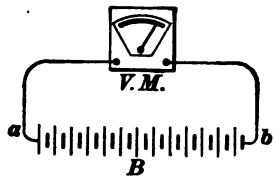

FIG. 5.

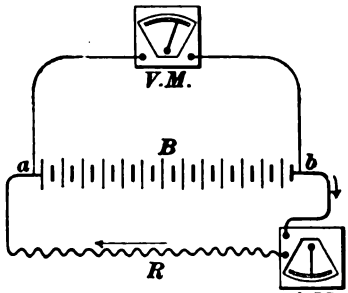

FIG. 6.

an E. M. F. of 24.4 volts. The battery is then connected in circuit with an ammeter *A. M.*, Fig. 6, and an unknown

resistance R. After these last connections are made, the voltmeter indicates an E. M. F. of 18 volts and the ammeter indicates a current of .8 ampere; determine the internal and external resistance of the circuit.

Ans. { Internal resistance = 8 ohms.
External resistance = 22.5 ohms.

(34) An E. M. F. of 510 volts is consumed in an electric receptive device and a current of 24.3 amperes is flowing in the circuit; calculate the power in watts supplied to the receptive device. Ans. 12,393 watts.

(35) A battery of twenty-four cells is arranged in multiple-series as shown in Fig. 7. There are four groups of six cells each, connected in series, and the four groups are connected in multiple, or parallel, to two main conductors c and c'. If the E. M. F. developed by each cell is 1.5 volts, what would be the E. M. F. indicated by the voltmeter $V.M.$ when its binding-posts are connected to the main conductors c and c', as shown in the figure?

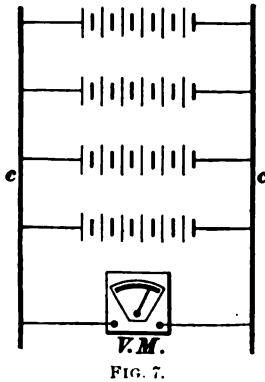

FIG. 7.

(36) The available E.M.F. developed by an electric source is 250 volts and a current of 65.7 amperes is flowing from it; determine its output in horsepower. Ans. 22.0174 horsepower.

(37) A conductor conveying a current of electricity is placed in a horizontal plane pointing north and south. If the north pole of a compass needle tends to point towards the east when the compass is placed directly under the conductor, in what direction is the current flowing in the conductor?

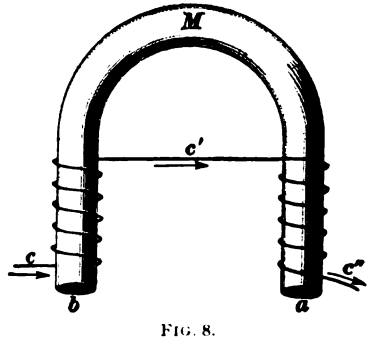

FIG. 8.

(38) Fig. 8 represents a horseshoe electromagnet M, around which is wound an insulated conductor $c\ c'\ c''$. If a current circulates through the conductor in the direction as indicated by the arrows, which of the two ends, a or b, is the south pole of the magnet?

(39) A piece of ivory is rubbed with silk and a stick of sealing-wax is rubbed with fur; would the ivory and sealing-wax tend to attract or repel one another when brought near together, and why?

(40) The two voltaic elements in a cell are iron and graphite. Which of the exposed ends of the two elements forms the negative pole or electrode of the cell, and why?

(41) Give the names of all the known magnetic substances.

(42) A compass C is placed between the north and south poles of two magnets, as shown in Fig. 9. Towards which pole will the north pole of the compass needle tend to point, and why?

FIG. 9.

(43) A compass C is placed alongside of a bar magnet opposite the neutral line, as shown in Fig. 10. Towards which pole of the magnet will the south pole of the compass needle tend to point, and why?

FIG. 10.

(44) A conductor conveying an electric current is placed in a horizontal plane pointing north and south, and the south pole of a compass needle tends to point towards the east when the compass is placed directly over the conductor. In which direction is the current flowing in the conductor? Give reasons.

(45) In an electromagnet, Fig. 11, the coil of wire is wound around an iron core in a right-handed spiral.

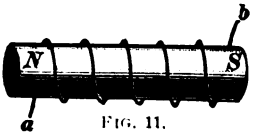

FIG. 11.

Through which end, *a* or *b*, of the wire must the current enter in order to produce the polarity as represented in the figure? Why?

(46) The resistance of a platinum wire 112 ft. 6 in. long is 100.8 ohms; calculate the resistance of 11.7 inches of the same wire, other conditions remaining unchanged.

Ans. .8736 ohm.

(47) If the resistance of a round iron wire 0.1″ in diameter is 86.5 ohms, calculate the resistance of a round iron wire .02″ in diameter, other conditions being equal in the two cases. Ans. 2,162.5 ohms.

(48) The resistance of a German-silver wire is 91.8 ohms at 45° F.; calculate its resistance when its temperature is 72° F., other conditions remaining unchanged.

Ans. 92.4048 ohms.

(49) If the resistance of a copper wire is .144 ohm at 87° F., what is its resistance at 41° F., other conditions remaining unchanged? Ans. .131 ohm.

(50) If the specific resistance of platinum is 3.565 microhms per cubic inch, find the resistance in ohms of a round platinum wire 126 ft. long and .1 in. in diameter.

Ans. .686 ohm.

(51) The diagram, Fig. 12, represents a particular pattern of resistance-box for a Wheatstone bridge, with battery and galvanometer circuits properly connected for taking resistance measurements. An unknown resistance X is connected to the terminals *c* and *b*. After adjusting the resistances of the same by withdrawing the plugs, as represented by the open spaces between the contacts, the galvanometer shows no deflection when the keys *k* and *k'* are pressed and the battery and galvanometer circuits are closed. Under these conditions, what is the resistance of X?

Ans. 7.23 ohms.

(52) The total E. M. F. developed in a closed circuit is 36 volts; the internal resistance is 18 ohms and the external resistance is 24 ohms; determine the strength of current in amperes flowing in the circuit. Ans. .8571 ampere.

(53) A current of 2.7 amperes is flowing in a closed circuit. If the total E. M. F. developed in the circuit is 12.6 volts, what is the total resistance of the circuit?

Ans. 4.6667 ohms.

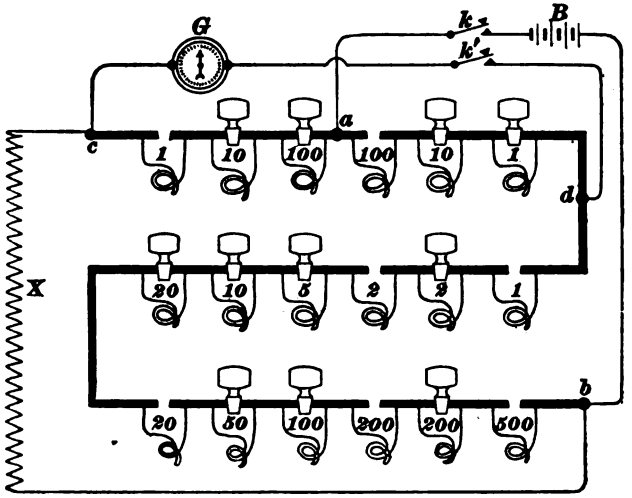

FIG. 12.

(54) The external resistance of a closed circuit is 31.5 ohms and the internal is 11 ohms. If a current of .8 ampere is flowing through the circuit, what is the total E. M. F. in volts developed? Ans. 34 volts.

(55) A German-silver wire offers a resistance of 204 ohms. What would be the difference in potential in volts between its two extremities if a current of .12 ampere flowed through it? Ans. 24.48 volts.

(56) The total E. M. F. developed in an electric source is 250 volts. If 10% of this E. M. F. is required to transmit a current of 80 amperes to and from a receptive device situated 600 feet from the source, (*a*) what is the total resistance of the two conductors, and (*b*) what is their resistance per foot, considering each to be 600 feet long?

Ans. { (*a*) .3125 ohm.
(*b*) .00026 ohm per foot.

(57) The internal resistance of a battery is 8.1 ohms and the total E. M. F. developed in it is 24 volts. What is the available or external E. M. F. of the battery when the circuit is completed by an external conductor offering a resistance of 15.9 ohms? Ans. 15.9 volts.

(58) The separate resistances of two branches A and B of a derived circuit are 1.2 and 2.2 ohms, respectively. If the sum of the currents in the two branches is 45 amperes, what is the current in each branch?

Ans. { The current in branch A is 29.1176 amperes.
The current in branch B is 15.8824 amperes.

(59) The separate resistances of two conductors are, respectively, 45 and 63 ohms; determine their joint resistance when connected in parallel or multiple.

Ans. 26.25 ohms.

(60) The separate resistances of three conductors A, B, and C are 414, 810, and 1,206 ohms, respectively; determine their joint resistance when connected in parallel or in multiple. Ans. 223.2534 ohms.

DYNAMOS AND MOTORS.

(PART 2.)

(1) Suppose that a ring-core armature of a bipolar dynamo is wound with 200 complete turns of wire which are properly connected to the segments of a commutator for generating a continuous current, and that there are 6,250,000 lines of force passing through the armature from the poles of the field-magnets. If the strength of the field remains constant and the armature is rotated at a uniform speed of 1,200 revolutions per minute, what is the total electromotive force in volts generated in the armature?

Ans. 250 volts.

(2) If the resistance of the field coils in a shunt dynamo is 440 ohms, and the difference of potential between the brushes when the external circuit is open is 220 volts, what is the strength of current in the field coils? Ans. .5 ampere.

(3) What is the distinction between an alternating current and a continuous current?

(4) Fig. 1 shows a cross-sectional view of a uniform magnetic field taken at right angles to the direction of the lines of force; that is, the dots represent the ends of the lines of force, their direction being downwards, piercing the paper. *C* represents a closed coil of some conducting material, such as copper, that is placed in the magnetic field with its plane at right angles to the direction of the lines of force. If the closed coil is

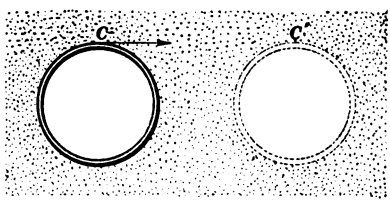

FIG. 1.

suddenly moved from its original position to another position in the field, as to C', as shown by the dotted coil, without changing the relative position of its plane with the direction of the lines of force, state whether or not a momentary current will circulate around the coil when the movement is made, and give the reason.

(5) The efficiency of a dynamo at full load is 88%, and at this load it requires an input of 18 horsepower to drive its armature. Determine the output in watts under these conditions. Ans. 11,816.64 watts.

(6) The output from a certain dynamo is 17,500 watts, and its efficiency at this output is 87.5%. If 2.6% of the input is used to excite the field-magnets, state the field loss in watts. Ans. 520 watts.

(7) The resistance of the shunt-field coils of a constant-potential dynamo is 55 ohms, and the difference of potential between the brushes when the armature is revolving at normal speed is 110 volts. How many watts are required to excite the field magnets? Ans. 220 watts.

(8) What is a commutator and for what is it used?

(9) A field rheostat is connected in series with the field circuit of a constant-potential shunt dynamo. When the external circuit of the dynamo is open, all the resistance of the rheostat is in circuit with the field coils and a current of 1.5 amperes is flowing through the field circuit. After the external circuit is closed and the current from the armature increases, it is necessary to cut out or short-circuit the resistance of the rheostat in order to keep the difference of potential between the brushes at 360 volts from no load to full load. At full load, the current in the field is 1.8 amperes; find the amount of resistance which was cut out or short-circuited in the rheostat. Ans. 40 ohms.

(10) The output of a dynamo is 65,000 watts, and its efficiency at this output is 90.5%; determine the input to the armature, and express the same in horsepower.

Ans. 96.2777 horsepower.

(11) Fig. 2 shows the connections of a shunt dynamo and the direction in which the field coils are wound. If the current flows in the direction indicated by the small arrow-heads, which of the two pole-pieces, P or P', is the north pole? Suppose that the winding of the right-hand coil were reversed, which pole-piece would then be the north pole?

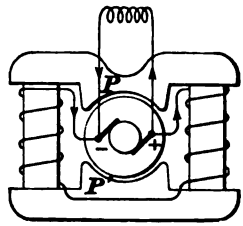

FIG. 2.

(12) Define a ring winding and a drum winding, and point out the difference between the two.

(13) The input to a dynamo is 10 horsepower and its output is 6,341 watts. What is its efficiency at this load?

Ans. 85%.

(14) Fig. 3 represents a cross-sectional view of a uniform magnetic field. The dots represent an end view of the

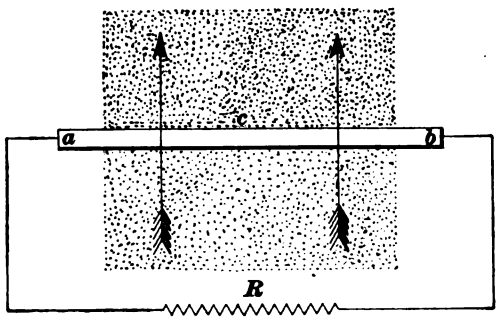

FIG. 3.

lines of force, their direction being downwards, piercing the paper; or, in other words, the observer is looking along the lines of force towards the face of a south pole; c represents a moving conductor placed in the magnetic field with its length at right angles to the direction of the lines of force; its two ends are connected to an external circuit consisting of the resistance R. If the conductor is moving upwards across the magnetic field in the direction as shown by the large arrows, in which direction will the current tend to flow in the circuit?

(15) A dynamo shows an efficiency of 85% when its output is 11,900 watts, and 1.8% of the input is lost in the core by eddy currents and hysteresis. What is the core loss in watts? Ans. 252 watts.

(16) (*a*) What is meant by the *counter torque* of a dynamo? (*b*) What causes it?

(17) A dynamo generates 125 volts at a normal load of 120 amperes output. If the resistance of the armature from brush to brush is .040 ohm, what is the armature loss in watts due to resistance? Ans. 576 watts.

(18) In example 17, if the efficiency of the dynamo at the normal output is 75%, what per cent. of the input is lost in the armature, due to its resistance? Ans. 2.88%.

(19) (*a*) What is meant by the *sparking limit* of the load of a dynamo? (*b*) What causes the sparking?

(20) In a compound-wound dynamo the resistance of the shunt-field coils is 550 ohms, and the resistance of the series-field coils through which all the current to the external circuit flows is .04 ohm. The dynamo generates 550 volts between its brushes when the output is 40 amperes. Determine the total number of watts lost in the shunt and series field coils combined at this output. Ans. 614 watts.

(21) Fig. 4 represents the field-magnets of a bipolar dynamo with consequent poles. If the field-magnets are separately excited by the battery *B*, which is connected to the four field coils *a*, *b*, *c*, and *d*, and the coils are connected together in series as shown in the diagram, which of the two consequent poles, *P* or *P'*, will be the south pole of the field-magnet?

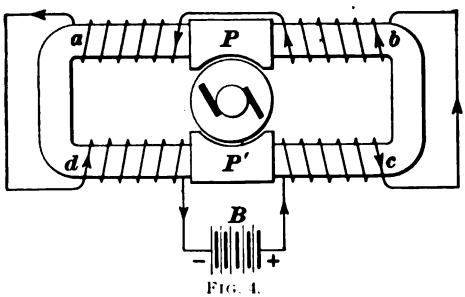

FIG. 4.

(22) What causes the neutral points in a dynamo to shift when a current is flowing in armature conductors?

(23) The separate losses at full load in a particular dynamo are as follows:

Loss in mechanical friction = 356 watts.
Loss in eddy currents and hysteresis = 178 watts.
Loss in field coils = 263 watts.
Loss in armature ($C^2 r$) = 423 watts.
All other losses = 50 watts.

If the output of the dynamo at full load is 15,000 watts, determine its per cent. efficiency. Ans. 92.1942%.

(24) (*a*) In example 23, what per cent. of the input is lost in mechanical friction? (*b*) in eddy currents and hysteresis? (*c*) in the field coils? (*d*) in the armature wires? (*e*) What is the total per cent. loss in the dynamo?

Ans. (*a*) 2.1881% loss.
(*b*) 1.094% loss.
(*c*) 1.6165% loss.
(*d*) 2.5999% loss.
(*e*) 7.8058% total loss.

(25) If a certain dynamo generates 440 volts when driven at a speed of 1,200 revolutions per minute, what electromotive force will it generate when driven at 1,400 revolutions per minute, all other conditions in regard to strength of field, armature reactions, and number of armature conductors remaining unchanged? Ans. 513⅓ volts.

(26) What limits the output of a constant-potential dynamo? Why?

(27) In Fig. 5, *C* represents an iron-magnet core around which the two coils *P* and *S* are wound. The coil *P* acts as a primary coil and is connected to the terminals *m* and *n* of a voltaic battery *B*. The coil *S* is, therefore, a secondary coil and its two ends are connected to the terminals *x* and *y* of an external resistance *R*. A key *k* is inserted into the primary circuit

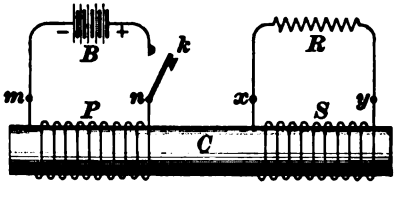

FIG. 5.

for opening and closing the circuit at will. If the negative electrode of the battery is connected to the terminal *m* in the primary circuit and the circuit is suddenly closed at *k*, in what direction will the momentary current induced in the secondary coil *S* flow ?

(28) In example 27, suppose that the circuit of the primary coil *P* was closed until the current in the circuit had become perfectly steady and then suddenly opened at *k*. In what direction would the momentary current induced in the secondary coil *S* flow ?

(29) Give two reasons why carbon brushes will spark less than copper brushes, under the same conditions.

(30) Fig. 6 represents a cross-sectional view of a uniform magnetic field. The dots represent an end view of the lines of force, their direction being downwards, piercing the paper; or, in other words, the observer is looking along the lines of force towards the face of a south pole.

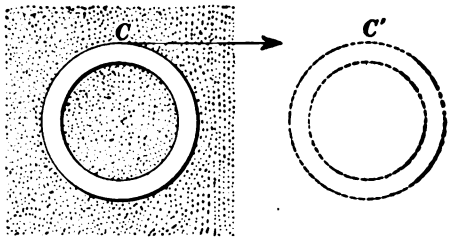

FIG. 6.

The ring *C* is a closed coil of some conducting material, as copper, and is placed in the magnetic field with its plane at right angles to the direction of the lines of force. Imagine the coil to be suddenly jerked from its position to one outside the magnetic field, as, for instance, to *C'*, assuming, of course, that its plane is kept always at right angles to the direction of the lines of force. Will a momentary current be produced in the closed coil, and if so, in which direction will it circulate around the ring ?

(31) What is a compound-wound dynamo, and why are dynamos compound-wound ?

(32) If a conductor cuts 8 million lines of force in one-quarter of a second, what is the *rate of cutting* per second ?

(33) State why a solid piece of iron will not answer for a revolving armature core.

(34) Suppose that a drum-core armature is wound with 150 complete turns of wire which are properly connected to the segments of a commutator for generating a continuous current, and the armature is placed in the field-magnets of a bipolar dynamo. If there are 2,500,000 lines of force passing through the armature and the armature is rotated at a uniform speed of 1,020 revolutions per minute, what is the difference of potential in volts between the brushes in open circuit? Ans. 127.5 volts.

(35) In a particular dynamo, if an electromotive force of 200 volts is generated when there are 750,000 lines of force passing through the armature, what electromotive force would be generated if the strength of the field were increased so that 1,250,000 lines of force passed through the armature, assuming that all other conditions as to speed, number of conductors, armature reactions, etc., remain unchanged? Ans. 333⅓ volts.

(36) To what are the following losses in a dynamo due: (*a*) core loss? (*b*) armature loss? (*c*) field loss?

(37) In Fig. 7, the observer is looking at the face of a north magnetic pole *N*, and a straight conductor *C* is placed in a vertical position in front of the pole with its length at right angles to the direction of the lines of force as they pass out from the pole. If the two ends of the conductor are connected to the terminals of the battery *B*, and a current flows through the circuit thus formed in the direction indicated by the arrow-heads, towards which side, *a* or *b*, of the pole face will the conductor tend to move?

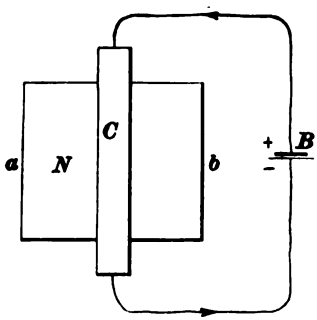

FIG. 7.

(38) In a shunt dynamo, if the resistance of the field coil is 650 ohms and the difference of potential between the brushes remains constant at 525 volts when the armature is rotated at a constant speed, what is the strength of current in the field coil under these conditions? Ans. .8076 ampere.

(39) A compound dynamo generates 115 volts between its terminals when no current is flowing into the external circuit. At full load, however, the difference of potential between its terminals is 124.2 volts. What per cent. over-compounding do these figures represent? Ans. 8%.

(40) Define an open-coil winding and a closed-coil winding, and point out the difference between the two.

(41) If it requires 44 horsepower to drive the armature of a dynamo when it is delivering 29,820 watts, what is the efficiency of the dynamo under these conditions?

Ans. 90.8481% efficiency.

(42) Find the total per cent. of the input lost in a dynamo when it is delivering 17,500 watts, if it requires 20,000 watts to drive its armature shaft at this output.

Ans. 12.5% total loss.

(43) The efficiency of a dynamo at its rated output of 12,500 watts is 92.5%. Determine the number of horsepower input necessary to give this output.

Ans. 18.1146 horsepower.

(44) What becomes of the heat generated in a dynamo armature?

(45) If 55 horsepower is the input to a dynamo and its efficiency at this input is 88.5%, find its output in watts under these conditions. Ans. 36,311.55 watts.

(46) The input to a generator is 45 horsepower, and 2% of this input is lost in exciting the field coils. State the field loss in watts. Ans. 671.4 watts.

(47) State the differences of separately-excited, shunt, and series-wound dynamos.

(48) The core losses in a particular generator amount to 800 watts and the input to the generator is 64 horsepower at full load. Determine the per cent. loss in the core at this input. Ans. 1.6756%.

(49) Why must the brushes of the dynamo be shifted ahead of the neutral point when operating under load?

(50) What is the difference between a consequent pole and a salient pole?

DYNAMOS AND MOTORS.

(PART 3.)

(1) (*a*) What is a transformer? (*b*) For what purpose is a transformer used?

(2) What is the relation between the counter E. M. F., the applied E. M. F., and the drop or fall of potential, in a direct-current motor armature?

(3) How can a short-circuited coil in an armature winding be detected?

(4) Which form (ring or drum) of armature winding is most generally used for alternators?

(5) Why will an ordinary series-wound dynamo, without regulating devices, not give a constant current through a circuit of varying resistance?

(6) What causes the current in an alternating-current circuit to lag behind the E. M. F.?

(7) What is meant when two alternating currents are said to differ in phase?

(8) Suppose that a direct-current motor when running shows a flash at each brush once in each revolution, and on examination it is found that one of the commutator segments is blackened and burned quite badly. What is the trouble?

(9) What causes an ordinary series-wound motor to race or run away (*a*) when connected in a constant-current circuit? (*b*) when connected to a constant-potential circuit and all the load removed?

(10) (*a*) What is meant by a *cycle* in speaking of an alternating current? (*b*) What is meant by the *frequency* of an alternating current?

(11) How is the Thomson-Houston constant-current dynamo regulated to give a constant current?

(12) What is the *effective* strength of an alternating current?

(13) A certain series-wound motor is tested with a Prony brake, the distance from the center of the shaft to the point where the arm of the brake rests on the scale platform being 36 inches. The brake is tightened until the pressure on the platform is 27 lb., when the following readings are taken: Current to motor, 25 amperes; volts at terminals, 480; speed, 900 R. P. M. (*a*) What is the output of the motor in H. P.? (*b*) What is its efficiency at this output?

Ans. { (*a*) 13.88 H. P.
(*b*) 86.3%.

(14) Why will an alternator armature not start to turn if supplied with an alternating current from some external source, the fields being excited?

(15) In a bipolar shunt motor with two field coils, one of the field coils becomes short-circuited. (*a*) What is liable to happen to the other coil? (*b*) Why?

(16) Draw a diagram showing the connections of a shunt-wound motor with main switch, reversing-switch, starting resistance, and fuse boxes.

(17) How may the speed of a direct-current motor be varied?

(18) Why is the resistance of a circuit having self-induction apparently greater with alternating currents than with continuous?

(19) When two coils or sets of coils in an open-coil constant-current armature are connected in parallel by the brushes, and the E. M. F. in one coil is less than that in the other, why does not a current flow from the coil having the higher E. M. F. around through the other?

(20) What operations would be gone through with in cutting out circuit No. *4* and plugging in circuit No. *1* in

series with No. 3 on dynamo *B*, using the switchboard represented in Fig. 48, Art. **115**, and starting with it in its present condition?

(21) A four-pole shunt-wound motor is installed in a certain shop, but on trying to start it, it is found that no current will flow through the field coils, although the circuit to which they are connected is alive. (*a*) What is the trouble? (*b*) How may it be located?

(22) (*a*) What three general methods of regulation are used with closed-coil constant-current dynamos? (*b*) Which of the three is most generally used?

(23) In a certain three-phase alternator, at a certain instant, the current flowing out through one of the brushes is 10 amperes, and the current flowing in through another brush is 39 amperes. (*a*) What is the strength of the current flowing in or out through the third brush, and which way is it flowing? (*b*) What makes you think so?

(24) How is it that the current taken by a synchronous single-phase motor can vary with the load, although the number of revolutions per minute does not vary?

(25) A certain motor, being tested with a Prony brake, is found to have 85% efficiency when taking an input of 33 amperes at 230 volts. If the arm of the brake is 2 feet long, from center of shaft to point where it rests on the scale platform, and the pressure on the scale platform is 20 lb., at what speed (to the nearest whole revolution) is the motor running? Ans. 1,136 rev. per min.

(26) What would be the frequency of the alternating current furnished by a 14-pole alternator running at 1,080 revolutions per minute? Ans. 126.

(27) (*a*) For what purpose is a lightning-arrester used? (*b*) How does it work?

(28) Why is the starting resistance of a shunt motor not included in the field circuit?

(29) How is it that the magnetic field of a rotary-field motor rotates?

(30) How may a grounded field coil in a shunt-wound generator be located, the current from another similar dynamo being available?

(31) (*a*) What is a multiphase alternator? (*b*) How does the current it furnishes differ from that of a single-phase machine?

(32) How is an alternator compounded?

(33) How may a path be provided over which the static electricity which may accumulate on a dynamo frame escapes?

(34) In general, what is the object of a switchboard?

(35) Why is it that there is no E. M. F. generated in the coil of a Westinghouse constant-current dynamo which is directly under a pole-piece?

(36) What is the general principle upon which all electric motors operate?

(37) What are bus-bars, and for what are they used?

(38) Why will an armature of too low resistance give little starting torque in a rotary-field motor?

(39) What is the character of the current in the external circuit of open-coil constant-current dynamos?

(40) For what purpose is the equalizing connection used in connecting compound-wound dynamos in parallel?

(41) On starting up a dynamo, one of the bearings begins to heat badly, and on examination it is found that the shaft is dented in places and has several rough spots. How may these defects be remedied?

(42) Why is it that the speed of a shunt-wound motor varies very little from full load to no load when supplied with a current at a constant potential?

(43) What is meant by a burned-out armature coil?

(44) How may an armature be balanced?

(45) Why does the neutral line of a motor shift in the opposite direction to that of a dynamo?

(46) Why should the ammeters on a switchboard for compound-wound dynamos, to be run in parallel, not be connected in the side of the circuit in which the series coils are connected?

(47) What limits the output of constant-current dynamos?

(48) What losses occur in a static transformer?

(49) What are some of the advantages of magnetic-circuit breakers as compared with fuses for use on switchboards?

(50) What would be the successive combinations which any particular coil in the Thomson-Houston constant-current dynamo makes with the other coils during a half revolution, starting from a position where it is not active?

(51) How does armature reaction affect the output (*a*) of synchronous alternating-current motors? (*b*) of rotary-field motors?

(52) A certain shunt-wound motor takes a current of 5 amperes at 125 volts when running free. Its armature resistance is .04 ohm and its field resistance 62.5 ohms. (*a*) What would be its output in H. P. when taking a current of 77 amperes at 125 volts? (*b*) What would be its efficiency at this output?

NOTE.—As the method of finding the output and efficiency which should be used in solving the above problem is not strictly accurate, four figures are enough to retain in calculations or results.

Ans. { (*a*) 11.76 H. P.
(*b*) 91.17%.

(53) What is the effect of too much oil or grease on the commutator of a direct-current constant-potential machine?

(54) (*a*) Why should the armature coils of an alternator be no wider than the neutral spaces? (*b*) Why should the neutral spaces in an alternator be made of the same width as the fields?

(55) How is the E. M. F. of the Excelsior constant-current dynamo regulated to give a constant current?

(56) What becomes of the energy in a direct-current motor armature represented by the product of the current flowing and the counter E. M. F. ?

(57) (*a*) By what two general systems is the current for incandescent lighting distributed ? (*b*) Describe the essential features of each method.

(58) What would be the speed at full load of a rotary-field motor whose field winding has 10 poles, if supplied from a circuit whose frequency is 72, assuming 2.5% slip ?

Ans. 842.4 rev. per min.

(59) Suppose that on starting a shunt-wound dynamo it should refuse to build up. What would probably be the trouble, and how would it be remedied ?

(60) (*a*) When a current is sent through a direct-current armature which is in an excited field, why does the armature tend to rotate ? (*b*) Under what circumstances will it rotate ? (*c*) Why does it not continue to speed up indefinitely when it has once started ?

(61) In what position with reference to the pole-pieces are the armature coils of a drum-wound alternator when there is no E. M. F. generated in them ?

(62) Why should both parts of the magnetic circuit (field-magnet and armature core) of a rotary-field motor be laminated ?

(63) Why is it necessary to use multipolar field-magnets for alternators ?

(64) In what general respects do switchboards for incandescent-lighting circuits using alternating currents differ from those using direct currents ?

(65) To reverse the direction of rotation of a direct-current motor, what changes in the connections are necessary ?

(66) Suppose that one of the field coils of a shunt-wound four-pole direct-current dynamo is wrongly connected. What effect would this probably have on the E. M. F. ?

(67) To what classes of work are (*a*) shunt-wound direct-current motors applicable? (*b*) series-wound motors? (*c*) Why?

(68) Describe the method of shifting the brushes used in the Thomson-Houston constant-current dynamos.

(69) What is a water rheostat, and for what is it often used?

(70) How is it that the armature winding of a rotary-field motor has no connection with the external circuit?

(71) On what conditions does the torque of a direct-current motor depend?

(72) Why does closing the secondary circuit of a transformer increase the current in the primary?

(73) What is meant by the "slip" of a rotary-field motor?

(74) Make a sketch showing your idea of the proper arrangement of the apparatus and the principal connections on a switchboard for a plant employing three compound-wound direct-current dynamos which are to be run in parallel and are to supply seven lighting circuits.

(75) Describe the general features of the Prony brake.

(76) Why is it desirable that the width of the open space between the two active parts of an armature coil of a drum-wound alternator should be not less than the width of the field?

(77) A single-phase alternating-current synchronous motor whose field has 22 poles is supplied with an alternating current with a frequency of 132 cycles per second. At what speed will it run? Ans. 720 rev. per min.

(78) (*a*) Why is it desirable to use an external resistance in the armature circuits of a rotary-field motor? (*b*) Why is this resistance not left permanently in circuit?

(79) How is it that the brushes of a constant-current dynamo with a closed-coil armature may be shifted to a considerable extent without causing excessive sparking?

(80) How may the applied E. M. F. of a direct-current motor be varied?

(81) From the nature of the sparking, how can you tell whether the brushes of a direct-current constant-potential dynamo are too far forwards or too far back?

(82) How are the devices for shifting the brushes of constant-current dynamos with closed-coil armatures usually thrown into or out of action?

(83) A three-phase rotary transformer is to deliver current at 200 volts. What must be the voltage of the alternating current supplied to it? Ans. 122.4 volts.

(84) An alternating current whose curve is of the form shown in Fig. 17 or 18, and whose maximum value is 12 amperes, is passed through a length of fine copper wire which it heats to a certain temperature. (*a*) What would be the number of amperes of a (steady) direct current that would heat the same wire to the same temperature under similar conditions? (*b*) Why? Ans. (*a*) 8.48 amperes.

(85) Why will the speed of a direct-current motor increase if the field is weakened?

(86) What is phase splitting?

(87) State two of the methods used in starting polyphase synchronous motors.

(88) How may the direction of rotation of a polyphase induction motor be changed?

(89) How may a two-phase induction motor be used on a single-phase circuit?

(90) What will be the alternating E. M. F. supplied by a two-phase rotary transformer fed with direct current at 220 volts? Ans. E. M. F. of each phase, 155.5 volts.

(91) How may the E. M. F. of the direct current supplied by a rotary transformer be varied?

(92) Referring to Fig. 16, Art. **34**, what will be the E. M. F. between *1* and *4* if the voltage on each phase is 440 volts?

ELECTRIC HOISTING AND HAULAGE.

(1) Compare electricity with steam and compressed air as to their relative advantages in the transmission of power at a mine, both when the major portion of the power is to be used for hoisting and haulage and when drills or pumps are to be operated.

(2) What are the steepest grades on which electric locomotives can be employed?

(3) What is the advantage of transmitting electrical energy at a high voltage?

(4) If, for the convenient handling of material, it is necessary to install the power plant at some distance from the mine, what advantage has electricity over steam or compressed air?

(5) What is the difference between continuous insulation and interval insulation, and what would you consider the advantages of each?

(6) Where should the trolley-wire, or other electric wires used underground, be placed in relation to the track?

(7) Describe one method of supporting the trolley-wire for underground traction.

(8) Why is it that wires encased in conduits or moldings can not be depended upon to transmit as much electrical energy as those which are exposed throughout their entire length?

(9) What precaution should be taken to prevent persons from receiving a shock from the frame or other portions of electric mining pumps, hoists, etc.?

(10) What special advantage has the electric motor for use in connection with hoisting?

(11) Into what two divisions may underground haulage in mines be divided?

(12) What special advantages does the electric locomotive possess for underground work?

(13) When an electric locomotive is controlled by a series-parallel controller, what takes place during each stage of the starting, i. e., upon each movement of the lever?

(14) What is the average speed of mine locomotives?

(15) Is it economy to use light rails where electric locomotives are employed?

(16) How are the motors mounted with the electric mining locomotives manufactured by the General Electric Company, in which two pairs of wheels are employed?

(17) If three pairs of wheels are employed, what provision has to be made to enable the locomotive to go around sharp curves?

(18) Do changes in temperature affect the electric system of transmission as much as the transmission of power by steam or compressed air?

(19) If it is desired to transmit a greater amount of power over a given sized wire, how may this be accomplished?

(20) Why is it not advisable to allow great losses of energy or falls of voltage in the transmission line?

ELECTRIC PUMPING, SIGNALING, AND LIGHTING.

(1) Give a sketch showing how to connect up an electric-bell signal for a shaft so that only one wire in the shaft will be necessary, the ground being used as a return.

(2) Give a sketch showing how to connect up a bell signal for a shaft, using three wires, so that a signal may be given from any intermediate point.

(3) (*a*) Explain the action of an ordinary vibrating electric bell. (*b*) How may a vibrating bell be made into a single-stroke bell?

(4) What style of battery is well adapted for circuits where there is considerable leakage on account of poor insulation?

(5) Give a sketch showing the necessary connections for a shaft flash-light signal system.

(6) (*a*) About how many watts per candle-power does an ordinary incandescent lamp require? (*b*) About how many candle-power can be obtained per horsepower expended? (*c*) About what current does a 16-candle-power, 110-volt lamp take?

(7) (*a*) Give a sketch showing how you would connect 125-volt lamps on a 250-volt circuit. (*b*) Give a sketch showing how you would connect 110-volt lamps on a 550-volt circuit.

(8) (*a*) What do you understand by a *short circuit?* (*b*) Why are short circuits on constant-potential systems liable to cause damage?

(9) (*a*) What is the difference between an enclosed-arc lamp and an open-arc lamp? (*b*) How does the consumption of carbon in the enclosed lamp compare with that in the open lamp?

(10) Give a comparison between the steam consumption per horsepower expended in pumping water by means of steam-pumps and electric pumps.

(11) What advantage have electric pumps over those driven by steam or compressed air in cases where the pump works on air part of the time?

(12) Which is generally the more economical, to pump water by stages or to use a high-pressure pump and force it to the surface at one lift?

(13) (*a*) About how many watts does an ordinary open-arc lamp, rated at 2,000 nominal candle-power, take? (*b*) How many watts are required for a lamp of 1,200 nominal candle-power?

(14) (*a*) What is the approximate efficiency of an electrically driven pump operated by double-reduction gearing? (*b*) What is the efficiency of a pump operated by single-reduction gearing?

(15) Give some of the advantages and disadvantages of centrifugal pumps.

(16) (*a*) What do you understand by the *drop* in an electric light or power circuit? (*b*) On what does the amount of the drop depend?

(17) (*a*) What is the objection to running a number of vibrating bells in series? (*b*) How may this objection be overcome?

(18) Why are bells operated in parallel usually preferred to those operated in series for mining work?

(19) A direct-current dynamo supplies 150 110-volt 16-candle-power lamps situated in a portion of a mine 1,500 feet from the dynamo. The allowable drop in the line is to be 10 per cent. of the pressure at the lamps. Calculate the

size of line-wire required in circular mils, and give the nearest size B. & S.

(20) If the diameter of a wire is .125 inch, what is its area of cross-section in circular mils?

(21) Give a diagram of a simple-haulage signal using a single wire with a ground return and arranged for ringing from either end.

(22) Give a diagram of a simple-haulage signal using three wires with a single battery and two bells arranged so that they may be rung from either end.

(23) (*a*) Explain the method of operating lights by means of the high-pressure alternating current, using transformers for lowering the pressure. (*b*) Why is this system particularly adapted for long-distance work?

(24) (*a*) What are fuses used for in lighting work? (*b*) What would be liable to happen if they were not used?

(25) An alternating-current dynamo operates 1,200 16-candle-power lights from 2,000-volt mains. The distance from the dynamo to the lamps is 2 miles and the allowable loss in pressure is 10 per cent. Calculate the required cross-section of the line-wire and give the nearest size B. & S.

(26) Give a sketch showing how two lamps may be connected up so that they may be controlled from either of two points.

(27) State some of the advantages of electrically driven pumps.

(28) If ordinary arc lamps are to be operated on a 110-volt, constant-potential circuit, how should they be connected up?

(29) If 200 16-candlepower lamps are wired up in sets of five in series across 500-volt mains, what will be the total current in the mains?

ELECTRIC COAL-CUTTING MACHINERY.

(1) What advantages has electricity over compressed air for driving coal-cutting machines?

(2) Why is it that alternating-current machines are not suitable for use in mines?

(3) In the case of thick seams of coal, why does the coal mined with a pick machine fall in better condition for loading than that mined with a machine cutter?

(4) Why can more lump coal be obtained when the coal is both undercut and sheared than when it is simply undercut?

(5) Can pick machines be employed in the case of steeply pitching seams; and if not, what are the limits?

(6) Why is it that chain-cutting machines can not be employed for mining old pillars or coal upon which there is a squeeze?

(7) Describe the two methods of feeding longwall mining machines along the face of the coal.

(8) How do the cutter-bar machines differ from the chain-cutting machines?

(9) How is the rotative motion of the motor transformed into a longitudinal motion of the pick in an electric pick machine?

(10) What kind of an operating platform is used with the pick machines when cutting coal?

(11) What advantage has a pick machine over chain machines when it is necessary to use props and cockermegs near the face of the coal?

(12) What advantage have pick machines over chain machines when they have to be moved from one room to another?

(13) How is the chain coal-cutting machine held in position during cutting so that the reaction of the cutters against the coal will not force the machine out of position?

(14) What advantage has the machine shown in Fig. 4 over those shown in previous figures, especially for work in thin seams of coal?

(15) When a ball of sulphur is encountered which seems to affect some of the cutters only, how may it sometimes be removed with a chain-cutting machine?

(16) How are the chain-shearing machines supported while at work?

(17) Why are the cutting teeth in the longwall machine employing a cutting arm placed in a spiral about the arm?

(18) How many men are commonly required to operate a pick machine, and what is the duty of each?

A KEY

TO ALL THE

QUESTIONS AND EXAMPLES

INCLUDED IN THE

QUESTION PAPERS IN THIS VOLUME.

It will be noticed that the Keys have been given the same section numbers as the Question Papers to which they refer. All article references refer to the Instruction Paper bearing the same section number as the Key in which it occurs, unless the title of some other Instruction Paper is given in connection with the article number.

PERCUSSIVE AND ROTARY BORING.

(1) See Art. **2.**

(2) See Art. **4.**

(3) See Art. **84.**

(4) See Art. **5.**

(5) See Art. **95.**

(6) See Art. **21.**

(7) See Arts. **92** and **94.**

(8) See Art. **11.**

(9) See Art. **87.**

(10) See Art. **22.**

(11) See Arts. **105–107.**

(12) See Art. **133.**

(13) See Art. **24.**

(14) See Art. **118.**

(15) See Art. **41.**

(16) See Art. **147.**

(17) See Art. **88.**

(18) See Art. **36.**

(19) See Arts. **52** and **53.**

(20) See Art. **56.**

(21) See Art. **69.**

(22) See Art. **81.**

(23) See Art. **56.**

(24) See Art. **91.**

(25) See Art. **102.**

(26) See Art. **54.**

(27) See Art. **42.**

(28) See Art. **72.**

(29) See Art. **60.**

(30) See Arts. **7** and **8.**

(31) See Art. **4.**

(32) See Art. **89.**

(33) See Art. **100.**

(34) See Art. **10.**

(35) See Art. **50.**

(36) See Art. **9.**

(37) See Art. **12.**

(38) See Art. **44.**

(39) See Art. **46.**

(40) See Art. **55.**

(41) See Art. **13.**

(42) See Art. **16.**

(43) See Art. **121.**

(44) See Arts. **113** and **114.**

(45) See Art. **124.**

(46) See Art. **135.**

(47) See Art. **15.**

(48) See Art. **152.**

(49) See Art. **17.**

(50) See Art. **160.**

(51) See Art. **110.**

(52) See Art. **15.**

(53) See Art. **22.**

(54) See Art. **148.**

(55) See Art. **18.**

(56) See Art. **15.**

(57) See Art. **39.**

(58) See Art. **40.**

(59) See Art. **120.**

(60) See Art. **37.**

(61) See Art. **64.**

(62) See Art. **73.**

(63) See Art. **142.**

(64) See Art. **67.**

(65) See Arts. **116-118.**

(66) See Art. **66.**

(67) See Art. **40.**

(68) See Arts. **128-130.**

(69) See Art. **36.**

(70) See Art. **74.**

(71) See Art. **65.**

(72) See Art. **139.**

(73) See Arts. **33** and **34.**

(74) See Art. **26.**

(75) See Art. **150.**

(76) See Art. **169.**

(77) See Art. **35.**

(78) See Art. **141.**

(79) See Art. **23.**

(80) See Art. **25.**

(81) See Art. **19.**

(82) See Art. **14.**

(83) See Art. **24.**

(84) See Art. **28.**

(85) See Art. **30.**

(86) See Art. **28.**

(87) See Art. **31.**

(88) See Art. **63.**

(89) See Art. **143.**

(90) See Art. **149.**

COMPRESSED-AIR COAL-CUTTING MACHINERY.

(1) See Art. **1.**

(2) See Art. **3.**

(3) See Art. **7.**

(4) See Arts. **11** and **12.**

(5) See Art. **20.**

(6) See Art. **26.**

(7) See Art. **31.**

(8) See Art. **37.**

(9) See Art. **1.**

(10) See Arts. **4** and **9.**

(11) See Art. **10.**

(12) See Art. **14.**

(13) See Art. **22.**

(14) Substituting in formula **3,**

$$V = \sqrt{\frac{2 \times 32.16 \times 2^2 \times 3.1416 \times 80 \times 12}{250 \times 12}} = 16.08 \text{ ft. per sec.}$$

Ans.

(15) See Art. **32.**

(16) See Art. **37.**

(17) See Art. **40.**

(18) See Art. **38.**

(19) See Art. **43.**

(20) See Arts. **2** and **21.**

(21) See Art. **5.**

(22) See Art. **13.**

(23) See Art. **28.**

(24) See Art. **34.**

(25) See Art. **39.**

(26) See Art. **45.**

(27) See Art. **2.**

(28) See Art. **5.**

(29) See Art. **6.**

(30) See Art. **16.**

(31) See Art. **23.**

(32) See Art. **47.**

(33) See Arts. **29** and **30.**

(34) See Art. **33.**

(35) See Art. **39.**

(36) Substituting in formula **4,**

$$F = \frac{18 \times 33{,}000}{330} = 1{,}800 \text{ lb.} \quad \text{Ans.}$$

(37) See Art. **5.**

(38) See Art. **9.**

(39) See Art. **18.**

(40) Using formula **1,**

$$U = \frac{6 \times 33{,}000}{200} = 990 \text{ ft.-lb.} \quad \text{Ans.}$$

(41) See Art. **36.**

(42) See Art. **6.**

(43) See Art. **17.**

(44) See Art. **19.**

(45) Using formula **2,**

$$F = \frac{22^2 \times 175 \times 12}{2 \times 32.16 \times 2.5} = 6{,}320.9 \text{ lb.} \quad \text{Ans.}$$

(46) See Art. **19.**

(47) See Arts. **46** and **47.**

(48) See Art. **46.**

(49) See Arts. **30** and **31.**

(50) No key.

DYNAMOS AND MOTORS.

(PART 1.)

(**1**) The end b; because, in looking at that end, the current circulates around the helix in an opposite direction to the hands of a watch. (Art. **29.**)

(**2**) (a) Negative. (Art. **7.**)
(b) Negative. (Art. **7.**)
(c) Positive. (Art. **7.**)

(**3**) By formula **6**, $C = \frac{E}{R}$, where C is the current in amperes flowing in a closed circuit, E is the total generated E. M. F. in volts, and R is the total resistance in ohms of the circuit. In this example, $E = 20$ volts and $R = 30 + 80 = 110$ ohms; hence, $C = \frac{E}{R} = \frac{20}{110} = .1818$ ampere. Ans.

(**4**) Let A represent the first branch and B the second; then, $r_1 = 16.2$ ohms, $r_2 = 14.1$ ohms, and $C = 6.37$ amperes.

The current c_1 in branch A is found by using formula **10**; substituting, gives $c_1 = \frac{C r_2}{r_1 + r_2} = \frac{6.37 \times 14.1}{16.2 + 14.1} = 2.9643$ amperes. Ans.

The current c_2 in branch B is found by using formula **11**; substituting, gives

$$c_2 = \frac{C r_1}{r_1 + r_2} = \frac{6.37 \times 16.2}{16.2 + 14.1} = 3.4057 \text{ amperes.} \quad \text{Ans.}$$

(**5**) From formula **23**, $W = \text{H. P.} \times 746$, where H. P. is the horsepower and W is the power in watts. In this example, H. P. $= 2.33$ horsepower; hence, $W = \text{H. P.} \times 746 = 2.33 \times 746 = 1{,}738.18$ watts. Ans.

(6) (*a*) From Art. **64** and formula **6**, $C = \frac{E'}{R'}$, where C is the current in amperes, E' is the difference of potential in volts between two points, and R' is the resistance in ohms between them. In this example, $E' = 58.4$ volts and $R' = 2.3$ ohms; hence, $C = \frac{E'}{R'} = \frac{58.4}{2.3} = 25.3913$ amperes. Ans.

(*b*) From formula **21**, $W = \frac{E^2}{R}$, where W is the power in watts, E is the E. M. F., or difference of potential in volts, and R is the resistance in ohms. In this example, $E = 58.4$ volts and $R = 2.3$ ohms; hence,

$$W = \frac{E^2}{R} = \frac{58.4^2}{2.3} = \frac{3,410.56}{2.3} = 1,482.8521 \text{ watts.} \quad \text{Ans.}$$

(*c*) By formula **22**, H. P. $= \frac{W}{746}$; by formula **21**, $W = \frac{E^2}{R}$; therefore (see Art. **81**), H. P. $= \frac{E^2}{746\,R}$, where H. P. is the horsepower, E the E. M. F., or difference of potential in volts, and R the resistance in ohms.

Hence, H. P. $= \frac{58.4^2}{746 \times 2.3} = \frac{3,410.56}{1,715.8} = 1.9877$ horsepower. Ans.

(7) Platinum, as it follows zinc in the list (Art. **13**).

(8) Towards the *east* (Art. **26**).

(9) By formula **8**, $E = C\,R$, where E is the total E. M. F. in volts developed in a closed circuit, C is the current in amperes flowing, and R is the total resistance in ohms of the circuit. In this example, $C = .75$ ampere and $R = 17.2 + 8.2 + 11.3 = 36.7$ ohms; hence, $E = C\,R = .75 \times 36.7 = 27.525$ volts, the total E. M. F. developed in the battery.

By derivation from formula **8**, $E' = C\,R'$, where E' is the difference of potential in volts between two points, C is the current in amperes flowing, and R' is the resistance in ohms between the two points.

Between a and b, $R' = 11.3$ ohms and $C = .75$ ampere; hence, $E' = C R' = .75 \times 11.3 = 8.475$ volts. Ans.

Between b and c, $R' = 8.2$ ohms and $C = .75$ ampere; hence, $E' = C R' = .75 \times 8.2 = 6.15$ volts. Ans.

Between a and c, the difference of potential is the difference of potential between a and b plus that between b and c, which is $6.15 + 8.475 = 14.625$ volts. Or, since the difference of potential between a and c is the available E. M. F. of the battery, when a current of .75 ampere is flowing, it can be calculated by using formula **9**, $E' = E - C r_i$, where E' is the available E. M. F., E is the total E. M. F. developed in the battery, C is the current flowing, and r_i is the internal resistance of the battery. In this case, $E = 27.525$ volts, $C = .75$ ampere, and $r_i = 17.2$ ohms; therefore, $E' = E - C r_i = 27.525 - (.75 \times 17.2) = 14.625$ volts. Ans.

(10) The sectional area of a wire .2 in. in diameter is $.7854 \times .2 \times .2 = .031416$ sq. in., or, nearly, .0314 sq. in.

Reduce the specific resistance in microhms to the resistance in ohms by dividing by 1,000,000 (Art. **44**), which gives $\frac{.5921}{1{,}000{,}000} = .0000005921$ ohm; or, in other words, the resistance of a piece of silver one inch long, and whose sectional area is one square inch, is .0000005921 ohm. Next, from this resistance and length calculate the resistance of 1,000 feet of the silver with a sectional area of 1 sq. in., by using formula **1**, $r_2 = \frac{r_1 l_2}{l_1}$, where r_1 is the original resistance, r_2 is the resistance after the length of the conductor is changed, l_1 is the original length of the conductor, and l_2 is the changed length. In this example, $r_1 = .0000005921$ ohm, $l_1 = 1$ inch, and $l_2 = 1{,}000$ feet, or 12,000 inches. Hence, by substituting, $r_2 = \frac{r_1 l_2}{l_1} = .0000005921 \times \frac{12{,}000}{1} =$ .0071052 ohm; that is, the resistance of 1,000 feet of silver having a sectional area of 1 sq. in. is .0071052 ohm. From this result calculate the resistance of 1,000 feet of the silver when its sectional area is .0314 sq. in., by using

formula **2**, $r_2 = \frac{r_1 a_1}{a_2}$, where r_1 is the original resistance, r_2 is the resistance after the sectional area has been changed, a_1 is the original area, and a_2 is the changed sectional area. At this stage of the example, $r_1 = .0071052$ ohm, $a_1 = 1$ sq. in., and $a_2 = .0314$ sq. in. Hence,

$$r_2 = \frac{.0071052 \times 1}{.0314} = .2262 \text{ ohm.} \quad \text{Ans.}$$

(11) By formula **8**, $E = C R$, where E is the total E. M. F. in volts developed in a closed circuit, C is the current in amperes flowing, and R is the total resistance in ohms of the circuit. In this example, $C = .127$ ampere and $R = 36.2 + 21.7 = 57.9$ ohms. Hence, by substituting, $E = C R = .127 \times 57.9 = 7.3533$ volts. Ans.

(12) By formula **14**, $Q = C t$, where Q is the quantity of electricity in coulombs which passes through a circuit, C is the current in amperes flowing in that circuit, and t is the time in seconds during which the current flows. In this example, $C = 8.32$ amperes and $t = 2.25 \times 60 \times 60 = 8{,}100$ seconds. Hence, by substituting, $Q = C t = 8.32 \times 8{,}100 = 67{,}392$ coulombs. Ans.

(13) By formula **19**, $W = C E$, where W is the power in watts, E is the E. M. F. in volts, and C is the current in amperes. In this example, $E = 112.5$ volts and $C = 12.2$ amperes. Hence, by substituting, $W = C E = 12.2 \times 112.5 = 1{,}372.5$ watts. Ans.

(14) By formula **12**, the joint resistance of a derived circuit of two branches in parallel $R'' = \frac{r_1 r_2}{r_1 + r_2}$. In this case, $r_1 = 2.4$ and $r_2 = 987.3$; then their joint resistance in parallel $R'' = \frac{2.4 \times 987.3}{2.4 + 987.3} = \frac{2{,}369.52}{989.7} = 2.3941$ ohms. Ans.

(15) By formula **4**, $r_2 = r_1 (1 + t k)$, where r_1 is the original resistance of a conductor, r_2 is the resistance after a rise in temperature, k is the temperature coefficient, and t is the rise of temperature in degrees F. In this example,

r = 43.2 ohms, $t = 85 - 60 = 25°$ F., and $k = .002155$, from Table 1. Hence, by substituting, $r_2 = r\ (1 + t\,k) = 43.2\ (1 + 25 \times .002155) = 43.2 \times 1.053875 = 45.5274$ ohms. Ans.

(16) By formula **13,** the joint resistance of three conductors in parallel $R''' = \dfrac{r_1 r_2 r_3}{r_2 r_3 + r_1 r_3 + r_1 r_2}$, where r_1, r_2, and r_3 are the separate resistances of the three conductors, respectively. In this example, let $r_1 = 37$ ohms, the resistance of A; $r_2 = 45$ ohms, the resistance of B; and $r_3 = 72$ ohms, the resistance of C. Substituting, we have

$$\frac{r_1 r_2 r_3}{r_2 r_3 + r_1 r_3 + r_1 r_2} = \frac{37 \times 45 \times 72}{45 \times 72 + 37 \times 72 + 37 \times 45} = \frac{119{,}880}{7{,}569} =$$

15.8383 ohms, the joint resistance of the three conductors A, B, and C connected in parallel. Ans.

(17) By formula **8,** $E = C\,R$, where E is the total E. M. F. in volts developed within a closed circuit, C is the current in amperes, and R is the total resistance in ohms of the circuit. In this example, $C = 2.73$ amperes and $R = 49.3$ ohms; hence, by substituting, $E = C\,R = 2.73 \times 49.3 = 134.589$ volts. Ans.

(18) From Art. **43,** the joint resistance of several conductors connected in series is equal to the sum of their separate resistances; hence, in this example, the joint resistance of the four conductors A, B, C, and D, in series, is $3 + 19 + 72 + 111 = 205$ ohms. Ans.

(19) (*a*) By formula **7,** $R = \dfrac{E}{C}$, where R is the total resistance in ohms of a closed circuit, E is the total E.M.F. in volts developed, and C is the current in amperes flowing in the circuit. In this example, $E = 28.2$ volts and $C = 5.2$ amperes; hence, $R = \dfrac{28.2}{5.2} = 5.423$ ohms. Ans.

(*b*) The total resistance of a closed circuit, Art. **60,** is equal to the sum of the internal and external resistances. Since in this example the external resistance is 7 times the

internal, and their sum is 5.423, let $\frac{1}{8}$ of the total resistance represent the internal, and, therefore, $\frac{7}{8}$ of the total resistance represents the external resistance. Hence, $\frac{1}{8} \times 5.423 = .677875$ ohm, the internal resistance. Ans.

And $\frac{7}{8} \times 5.423 = 4.745125$ ohms, the external resistance. Ans.

(20) We here use formula **16,** $J = C^2 R t$, where J is the work in joules, C is the current in amperes, R is the resistance in ohms, and t is the time in seconds. In this case, $C = 14.2$ amperes, $R = 8$ ohms, $t = 4{,}500$ seconds. Then, the work done $= 14.2 \times 14.2 \times 8 \times 4{,}500 = 7{,}259{,}040$ joules. Ans.

(21) By formula **5,** $r_2 = \frac{r_1}{1 + tk}$, where r_1 is the original resistance of a conductor, r_2 is the resistance after its temperature has fallen, t is the fall of temperature in degrees F., and k is the temperature coefficient. In this example, $r_1 = 214$ ohms, $t = 82 - 50 = 32°$ F., and $k = .002094$, from Table 1. Hence,

$$r_2 = \frac{r_1}{1 + tk} = \frac{214}{1 + 32 \times .002094} = \frac{214}{1.067008} = 200.5608 \text{ ohms.}$$

Ans.

(22) From Art. **75,** the separate resistance of any branch of a derived circuit is equal to the difference of potential between where all the branches divide and where they unite, divided by the current in that branch.

Hence, the separate resistance of branch A is $\frac{11.6}{6.7} = 1.7313$ ohms. Ans.

The separate resistance of branch B is $\frac{11.6}{4.9} = 2.3673$ ohms. Ans.

(23) By formula **7,** $R = \frac{E}{C}$, where R is the total resistance in ohms of a closed circuit, E is the total E. M. F. in volts developed in the circuit, and C is the current in amperes flowing in the circuit. In this example, $E = 22.4$ volts and $C = .43$ ampere; hence, $R = \frac{E}{C} = \frac{22.4}{.43} = 52.093$

ohms, the total resistance of the circuit. Since the total resistance of a closed circuit is equal to the sum of the external and internal resistances, the external resistance must be the difference between the total resistance and the internal resistance. Hence, the external resistance = 52.093 − 13.4 = 38.693 ohms. Ans.

(24) By transposition of terms in formula **14**, $C = \frac{Q}{t}$, where C is the current in amperes, Q is the quantity of electricity in coulombs, and t is the time in seconds. In this example, $Q = 368{,}422$ coulombs and $t = 4.5 \times 60 \times 60 = 16{,}200$ seconds; hence, $C = \frac{Q}{t} = \frac{368{,}422}{16{,}200} = 22.7421$ amperes. Ans.

(25) By formula **16**, $J = C^2 R t$, where J is the work done in joules, C is the current in amperes, R is the resistance in ohms, and t is the time in seconds. In this example, $C = 2.4$ amperes, $R = 45$ ohms, and $t = 3{,}000$ seconds. Then the electrical work done = $2.4 \times 2.4 \times 45 \times 3{,}000 = 777{,}600$ joules. By formula **18**, the mechanical work done = F. P. = .7373 J = .7373 × 777,600 = 573,324.48 foot-pounds. Ans.

(26) By formula **22**, H. P. = $\frac{W}{746}$; by formula **19**, $W = CE$; therefore (see Art. **81**), H. P. = $\frac{EC}{746}$, where H. P. is the horsepower, E is the E. M. F. in volts, and C is the current in amperes. In this example, $E = 525$ volts and $C = 12.5$ amperes; hence,

$$\text{H. P.} = \frac{EC}{746} = \frac{525 \times 12.5}{746} = 8.7969 \text{ horsepower.} \quad \text{Ans.}$$

(27) (*a*) By formula **20**, $W = C^2 R$, where W is the power in watts, C is the current in amperes, and R is the resistance in ohms. In this example, $C = 110$ amperes and $R = 4.2$ ohms; hence, $W = C^2 R = 110^2 \times 4.2 = 50{,}820$ watts. Ans.

(*b*) By formula **22**, H. P. = $\frac{W}{746}$, where H. P. is the

horsepower and W is the power in watts. In this example, $W = 50{,}820$ watts; hence,

$$\text{H. P.} = \frac{W}{746} = \frac{50{,}820}{746} = 68.1233 \text{ horsepower.} \quad \text{Ans.}$$

(28) The diagram, Fig. 1, shows the connections of the battery and galvanometer circuits to the circular type of resistance-box for measuring unknown resistances by the Wheatstone-bridge method. The upper balance arm (Art. **53**) of the bridge includes the resistance coils from c to a, the lower balance arm includes the coils from a to d, and the adjustable arm includes the coils from d to b. One pole of the battery B is connected to the junction of the two balance arms, the other to the junction of the adjustable arm and the unknown resistance X. One terminal of the galvanometer G is connected to the junction of the lower balance arm and the adjustable arm; the other to the junction of the upper balance arm and the unknown resistance.

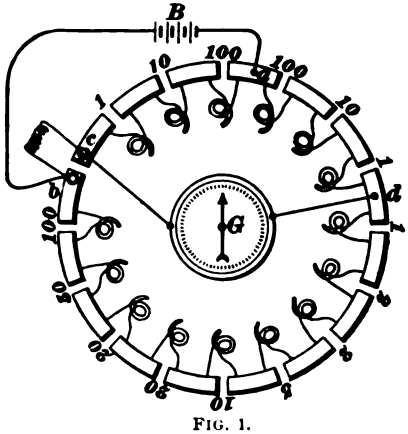

FIG. 1.

(29) By formula **1**, the changed resistance for variation in length $r_2 = \frac{r_1 l_2}{l_1}$, where r_1 is the original resistance, l_1 is the original length, and l_2 is the changed length. In this case, $r_1 = 1$ ohm, $l_1 = 1{,}000$ feet, and $l_2 = 2{,}000$ feet. Then, the changed resistance $r_2 = \frac{1 \times 2{,}000}{1{,}000} = 2$ ohms. The next operation is to determine the resistance of the wire when its sectional area is changed. A round wire .1″ in diameter has a sectional area of $.1^2 \times .7854 = .007854$ sq. in., and a square wire .1″ on a side has a sectional area of $.1 \times .1 = .01$ sq. in. By formula **2**, $r_2 = \frac{r_1 a_1}{a_2}$, where r_1 is

the original resistance of a conductor, r_2 is the resistance after its sectional area is changed, a_1 is the original sectional area, and a_2 is the changed sectional area. At this stage of the example, $r_1 = 2$ ohms, $a_1 = .007854$ sq. in., and $a_2 = .01$ sq. in. Hence, $r_2 = \frac{r_1 a_1}{a_2} = \frac{2 \times .007854}{.01} = 1.5708$ ohms. Ans.

(30) By formula **22,** H. P. $= \frac{W}{746}$, where H. P. is the horsepower and W is the power in watts. In this example, $W = 54{,}200$ watts; hence, H. P. $= \frac{W}{746} = \frac{54{,}200}{746} = 72.6541$ horsepower. Ans.

(31) The sectional area of a round column .04 in. in diameter is $.04^2 \times .7854 = .00125664$ sq. in., or .001257 sq. in., nearly.

Reduce the specific resistance in microhms to the resistance in ohms by dividing by 1,000,000, Art. **44,** which gives $\frac{37.15}{1{,}000{,}000} = .00003715$ ohm; or, in other words, the resistance of a quantity of mercury 1 in. long, and whose sectional area is 1 sq. in., is .00003715 ohm. Next, from this resistance and length, calculate the resistance of a column of mercury 72.3″ high, with a sectional area of 1 sq. in. by using formula **1,** $r_2 = \frac{r_1 l_2}{l_1}$, where r_1 is the original resistance of a conductor, r_2 is the resistance after its length has been changed, l_1 is its original length, and l_2 is its changed length. In this example, $r_1 = .00003715$ ohm, $l_1 = 1''$, and $l_2 = 72.3$ inches. Hence, $r_2 = \frac{r_1 l_2}{l_1} = \frac{.00003715 \times 72.3}{1} = .002685945$, or .002686 ohm, nearly; or, in other words, the resistance of a column of mercury 72.3″ high, having a sectional area of 1 sq. in., is .002686 ohm. From this result calculate the resistance of the column when its sectional area is .001257 sq. in., by using formula **2,** $r_2 = \frac{r_1 a_1}{a_2}$, where r_1 is the original resistance,

r_2 is the resistance after the sectional area has been changed, a_1 is the original sectional area, and a_2 is the changed sectional area. At this stage of the example, $r_1 = .002686$ ohm, $a_1 = 1$ sq. in., and $a_2 = .001257$ sq. in. Hence,

$$r_2 = \frac{r_1 a_1}{a_2} = \frac{.002686 \times 1}{.001257} = 2.1368 \text{ ohms.} \quad \text{Ans.}$$

(32) By formula **6,** $C = \frac{E}{R}$, where C is the current in amperes flowing in a closed circuit, E is the total E. M. F. in volts generated, and R is the total resistance in ohms of the circuit. Since the total resistance of a closed circuit is the sum of the external and internal circuits, $R = 33 + 30 = 63$ ohms and $E = 45$ volts; hence, $C = \frac{E}{R} = \frac{45}{63} = .7143$ ampere. Ans.

(33) In Fig. 5, question 33, the reading of the voltmeter gives the total E. M. F. of the battery. Hence, after the connections are made, as shown in Fig. 6, question 33, there is a closed circuit in which the total E. M. F. developed is 24.4 volts, and through which a current of .8 ampere is flowing. By formula **7,** $R = \frac{E}{C}$, where R is the total resistance in ohms of a closed circuit, E is the total E. M. F. in volts developed, and C is the current in amperes flowing. In this example, $E = 24.4$ volts and $C = .8$ ampere; hence, $R = \frac{E}{C} = \frac{24.4}{.8} = 30.5$ ohms, the total resistance of the circuit.

From the reading of the voltmeter, after the connections are made as shown in Fig. 6, it will be seen that when a current of .8 ampere flows through the external resistance from b to a through R, there is a drop or loss of potential of 18 volts. By Art. **64** and formula **7,** $R' = \frac{E'}{C}$, where R' is the resistance of a conductor, E' the drop, or loss, of potential in that conductor, and C is the current in amperes

flowing through it. In this case, $E' = 18$ volts and $C = .8$ ampere; hence, $R' = \frac{E'}{C} = \frac{18}{.8} = 22.5$ ohms, the resistance of the external circuit from b to a through the resistance R. Ans.

Since the total resistance of a closed circuit is the sum of the external and internal resistances, Art. **60,** the internal resistance must be the difference between the total and external resistances. Hence, $30.5 - 22.5 = 8$ ohms, the internal resistance of the battery B. Ans.

(34) By formula **19,** $W = CE$, where W is the power in watts, E is the E. M. F., or difference of potential in volts, and C is the current in amperes. In this example, $E = 510$ volts and $C = 24.3$ amperes; hence, $W = 510 \times 24.3 = 12{,}393$ watts. Ans.

(35) Referring to Art. **56,** the total E. M. F. developed by connecting several cells in series is equal to the E. M. F. of one cell multiplied by the number of cells; hence, the E. M. F. of one of the groups of 6 cells is $6 \times 1.5 = 9$ volts. In the same article it is stated that connecting cells in multiple, or parallel, does not change the E. M. F. between the main conductors. In this case, each group of six cells can be considered as one large cell developing an E. M. F. of 9 volts, and, consequently, the E. M. F. of the four groups connected in multiple, or parallel, is 9 volts, which would be the E. M. F. indicated by a voltmeter connected to the main conductors c and c', as shown in Fig. 7, question 35. Ans.

(36) By formula **22,** H. P. $= \frac{W}{746}$; by formula **19,** $W = CE$; therefore (see Art. **81**), H. P. $= \frac{EC}{746}$, where H. P. is the horsepower, E is the E. M. F. in volts, and C is the current in amperes. In this example, $E = 250$ volts and $C = 65.7$ amperes; hence, H. P. $= \frac{EC}{746} = \frac{250 \times 65.7}{746} = \frac{16{,}425}{746} = 22.0174$ horsepower. Ans.

(37) In Art. **26** it is stated that when a compass is placed under a conductor in which an electric current is flowing from the south to the north, the north pole of the compass needle tends to point towards the west, and if the direction of the current in the conductor is reversed, the north pole will point towards the east. Since, in this example, the north pole of the needle tends to point towards the east, the current must be flowing *from* the north *to* the south.

(38) End *a*, since (Art. **29**), in looking at the face of the end *a*, the current circulates around the core in the same direction as the movement of the hands of a watch.

(39) Attract one another; since (Art. **7**) a positive charge is developed upon the ivory when rubbed with silk and a negative charge upon sealing-wax when rubbed with fur; and from Art. **6**, electrified bodies with dissimilar charges are mutually attractive.

(40) The exposed end of the iron; since, from Art. **13**, the iron forms the positive element of the cell, and, from Art. **12**, the pole, or electrode, attached to the exposed end of a voltaic element is always of opposite sign to the element itself.

(41) From Art. **21**, iron and its alloys, nickel, cobalt, manganese, oxygen, cerium, and chromium.

(42) Towards the south pole, since, from Art. **20**, unlike poles attract one another.

(43) Towards the north pole, since, from Art. **20**, unlike poles attract one another.

(44) *From* the north *to* the south, since, from Art. **26**, the north pole of a compass needle tends to point towards the east when the compass is placed over a conductor in which the current is flowing from the south to the north; and by reversing the direction of the current in the conductor, the north pole of the needle tends to point towards the west and the south pole towards the east.

(45) The current should enter the wire at end *b*; since (Art. **29**), in looking at the face of the south pole

of the magnet, the current circulates around the core in the direction of the motion of the hands of a watch.

(46) By formula **1**, $r_2 = \frac{r_1 l_2}{l_1}$, where r_1 is the original resistance of a conductor, r_2 is the resistance after its length has been changed, l_1 is the original length, and l_2 is its changed length. In this example, $r_1 = 100.8$ ohms, $l_1 = (112 \times 12) + 6 = 1{,}350$ inches, and $l_2 = 11.7$ inches. Hence,

$$r_2 = \frac{r_1 l_2}{l_1} = \frac{100.8 \times 11.7}{1{,}350} = .8736 \text{ ohm.} \quad \text{Ans.}$$

(47) By formula **3**, $r_2 = \frac{r_1 D^2}{d^2}$, where r_1 is the original resistance of a round conductor, r_2 is the resistance after its diameter has been changed, D is its original diameter, and d is its changed diameter. In this example, $r_1 = 86.5$ ohms, $D = .1$ inch, and $d = .02$ inch; hence, $r_2 = \frac{r_1 D^2}{d^2} = \frac{86.5 \times .1^2}{.02^2} = \frac{86.5 \times .01}{.0004} = 2{,}162.5$ ohms. Ans.

(48) By formula **4**, $r_2 = r_1 (1 + t k)$, where r_1 is the original resistance of a conductor, r_2 is the resistance after its temperature has risen, k is the temperature coefficient, and t is the number of degrees rise Fahrenheit. In this example, $r_1 = 91.8$ ohms, $t = 72 - 45 = 27$ degrees, and $k = .000244$, from Table 1. Hence, $r_2 = r_1 (1 + t k) = 91.8 \ (1 + 27 \times .000244) = 91.8 \times 1.006588 = 92.4048$ ohms. Ans.

(49) By formula **5**, $r_2 = \frac{r_1}{1 + t k}$, where r_1 is the original resistance of a conductor, r_2 is the resistance after its temperature has fallen, t is the number of degrees fall Fahrenheit, and k is the temperature coefficient of the material. In this example, $r_1 = .144$ ohm, $t = 87 - 41 = 46$ degrees Fahrenheit, and $k = .002155$, from Table 1. Hence,

$$r_2 = \frac{r_1}{1 + t k} = \frac{.144}{1 + 46 \times .002155} = \frac{.144}{1.09913} = .131 \text{ ohm.}$$

Ans.

(50) First reduce the specific resistance in microhms to the resistance in ohms by dividing by 1,000,000, Art. **44,** which gives $\frac{3.565}{1,000,000} = .000003565$ ohm; or, in other words, the resistance of a block of platinum one inch long, and whose sectional area is one square inch, is .000003565 ohm. Next, from this resistance and length, calculate the resistance of 126 feet of platinum with a sectional area of 1 sq. in., by using formula **1,** $r_2 = \frac{r_1 l_2}{l_1}$, where r_1 is the original resistance of a conductor, r_2 is the resistance after its length has been changed, l_1 is the original length of the conductor, and l_2 is its changed length. In this example, $r_1 = .000003565$ ohm, $l_1 = 1$ inch, and $l_2 = 126 \times 12 = 1,512$ inches. Hence,

$$r_2 = \frac{r_1 l_2}{l_1} = \frac{.000003565 \times 1,512}{1} = .00539028 \text{ ohm};$$

that is, the resistance of 126 feet of platinum having a sectional area of 1 sq. in. is .00539 ohm, nearly. From this result calculate the resistance of 126 feet of platinum when its sectional area $= .1^2 \times .7854 = .007854$ sq. in., by using formula **2,** $r_2 = \frac{r_1 a_1}{a_2}$, where r_1 is the original resistance of a conductor, r_2 is the resistance after its sectional area is changed, a_1 is its original sectional area, and a_2 is its changed sectional area. At this stage of the example, $r_1 = .00539$ ohm, $a_1 = 1$ sq. in., $a_2 = .007854$ sq. in. Hence, $r_2 = \frac{.00539 \times 1}{.007854} = .686$ ohm. Ans.

(51) From Art. **53,** the fundamental equation of the Wheatstone bridge is $X = \frac{M}{N} \times P$, where X is the unknown resistance, M is the resistance of the upper balance arm, N is the resistance of the lower balance arm, and P is the resistance of the adjustable arm. It will be seen from the connections of the battery and galvanometer circuits in the diagram that the coils lying between c and a form the upper balance arm of the bridge, and hence, in

this example, $M = 1$ ohm; the coils between a and d form the lower balance arm, and hence $N = 100$ ohms; the coils between d and b form the adjustable arm, and hence $P = 500 + 200 + 20 + 2 + 1 = 723$ ohms. Substituting these values in the fundamental equation gives

$$X = \frac{M}{N} \times P = \frac{1}{100} \times 723 = 7.23 \text{ ohms.} \quad \text{Ans.}$$

(52) By formula **6,** $C = \frac{E}{R}$, where C is the current in amperes flowing in a closed circuit, E is the total E. M. F. in volts developed in the circuit, and R is the total resistance in ohms of the circuit. In this example, $E = 36$ volts and $R = 24 + 18 = 42$ ohms; since, Art. **60,** the total resistance of a closed circuit is the sum of the internal and external resistances. Hence, $C = \frac{E}{R} = \frac{36}{42} = .8571$ ampere. Ans.

(53) By formula **7,** $R = \frac{E}{C}$, where R is the total resistance in ohms of a closed circuit, E is the total E. M. F. in volts developed in the circuit, and C is the current in amperes flowing through the circuit. In this example, $E = 12.6$ volts and $C = 2.7$ amperes; hence, $R = \frac{E}{C} = \frac{12.6}{2.7} = 4.6667$ ohms. Ans.

(54) By formula **8,** $E = CR$, where E is the total E. M. F. in volts developed in a closed circuit, C is the current in amperes flowing through the circuit, and R is the total resistance of the circuit. In this example, $C = .8$ ampere and $R = 31.5 + 11 = 42.5$ ohms, since, Art. **60,** the total resistance of a closed circuit is the sum of the internal and external resistances. Therefore, $E = CR = .8 \times 42.5 = 34$ volts. Ans.

(55) By Art. **64** and formula **8,** $E' = CR'$, where E' is the difference of potential in volts between two points in a circuit, C the current in amperes flowing through the circuit, and R' the resistance of the circuit between the

two points. In this example, $C = .12$ ampere and $R' = 204$ ohms; hence, $E' = C R' = .12 \times 204 = 24.48$ volts. Ans.

(56) (*a*) By Art. **64** and formula **7**, $R' = \frac{E'}{C}$, where R' is the total resistance in ohms between two points in a circuit, E' the drop, or loss, of potential in volts between the two points, and C the current in amperes flowing in the circuit. In this example, the two conductors leading to and from the receptive device can be considered as in series, forming one single conductor 1,200 feet in length, in which the drop, or loss, of potential is 10% of 250 volts, or $.10 \times 250 = 25$ volts; that is, $E' = 25$ volts. Since $C = 80$ amperes, then $R' = \frac{E'}{C} = \frac{25}{80} = .3125$ ohm; or, in other words, the sum of the resistances of two conductors which transmit a current of 80 amperes to and from the receptive device with a loss of 25 volts is .3125 ohm. Ans.

(*b*) The resistance per foot of any conductor is found by dividing its total resistance by its length in feet. Assume the two conductors leading to and from the receptive device to be one single conductor 1,200 feet in length and offering a resistance of .3125 ohm; hence, its resistance per foot is

$$\frac{.3125}{1{,}200} = .00026 \text{ ohm.} \quad \text{Ans.}$$

(57) By formula **6**, $C = \frac{E}{R}$, where C is the current in amperes flowing in a closed circuit, E is the total E. M. F. in volts developed in the circuit, and R is the total resistance in ohms of the circuit. In this example, $E = 24$ volts and $R = 8.1 + 15.9 = 24$ ohms, since, Art. **60**, the total resistance of a closed circuit is the sum of the internal and external resistances. Hence,

$$C = \frac{E}{R} = \frac{24}{24} = 1 \text{ ampere.}$$

By formula **9**, $E' = E - C r_i$, where E' is the available, or external, E. M. F. in volts of a battery or other electric source in a closed circuit, E is the total E. M. F. in volts

developed in the source, C is the current in amperes flowing through the circuit, and r_i is the internal resistance of the battery or electric source. In this example, $E = 24$ volts, $C = 1$ ampere, and $r_i = 8.1$ ohms. Hence, $E' = E - Cr_i = 24 - (8.1 \times 1) = 15.9$ volts. Ans.

(58) Let A represent the first branch and B the second; then, $r_1 = 1.2$ ohms, $r_2 = 2.2$ ohms, and $C = 45$ amperes.

The current c_1 in branch A will then be found by substituting these values in formula **10,** which gives

$$c_1 = \frac{Cr_2}{r_1 + r_2} = \frac{45 \times 2.2}{1.2 + 2.2} = \frac{99}{3.4} = 29.1176 \text{ amperes.} \quad \text{Ans.}$$

Since the sum of the currents in the two branches is 45 amperes, the current in branch B is, therefore, the difference between 45 amperes and the current in branch A, or $45 - 29.1176 = 15.8824$ amperes. Ans.

(59) By formula **12,** the joint resistance of two conductors connected in parallel is equal to the product of their separate resistances divided by their sum, or $\frac{r_1 r_2}{r_1 + r_2}$, where r_1 and r_2 are the separate resistances of the two branches. In this example, $r_1 = 45$ ohms and $r_2 = 63$ ohms. Hence, $\frac{45 \times 63}{45 + 63} = 26.25$ ohms, the joint resistance of the two conductors connected in parallel.

(60) From Art. **72,** the joint resistance of three conductors connected in parallel is given by formula **13,** $R''' = \frac{r_1 r_2 r_3}{r_2 r_3 + r_1 r_3 + r_1 r_2}$, where r_1, r_2, and r_3 are the separate resistances of the three conductors. In this example, let $r_1 = 414$ ohms, $r_2 = 810$ ohms, and $r_3 = 1{,}206$ ohms. Then, the joint resistance of the three conductors A, B, and C when connected in parallel is

$$\frac{r_1 r_2 r_3}{r_2 r_3 + r_1 r_3 + r_1 r_2} = \frac{414 \times 810 \times 1{,}206}{810 \times 1{,}206 + 414 \times 1{,}206 + 414 \times 810} =$$

$$\frac{404{,}420{,}040}{976{,}860 + 499{,}284 + 335{,}340} = \frac{404{,}420{,}040}{1{,}811{,}484} = 223.2534 \text{ ohms.}$$

Ans.

DYNAMOS AND MOTORS.

(PART 2.)

(1) By formula **1**, $E = \frac{2NSn}{10^8}$. In this example, $N = 6{,}250{,}000$ lines of force, $S = 100$ outside, or face, wires in series, for if 200 turns were wound around the core, there would be 200 outside, or face, wires, and, from Art. **23**, one-half would be connected in series, and $n = 1\frac{2}{6}\frac{0}{0}$ revolutions per second. Substituting these values in above formula gives $E = \frac{2NSn}{10^8} = \frac{2 \times 6{,}250{,}000 \times 100 \times 1{,}200}{100{,}000{,}000 \times 60} =$ 250 volts. Ans.

(2) From Art. **36**, it will be seen that the current in the shunt field of a dynamo is equal to the difference of potential between the brushes divided by the resistance of the shunt-field circuit, or $C_s = \frac{E_e}{R_s}$. In this example, $E_e =$ 220 volts and $R_s = 440$ ohms; hence, $C_s = \frac{E_e}{R_s} = \frac{220}{440} = .5$ ampere. Ans.

(3) See Arts. **13** and **14**.

(4) In Art. **1**, it is stated that a current will be induced in a closed coil or circuit when there is a change in the number of lines of force passing through that coil or circuit. In this case, as the magnetic field is uniform, there is no change in the number of lines of force passing through the coil C when it is moved from its original position to the position C', as shown by the dotted outlines; and, hence, no current will flow around the ring.

(5) In order to determine the result in watts, it is necessary to reduce all quantities to the same units; hence, the first operation is to reduce the input from horsepower to watts. From Art. **81**, Part 1, one horsepower is equivalent to 746 watts; therefore, the input $= 18 \times 746 = 13{,}428$ watts. Then, by formula **5**, the output

$$O = \frac{13{,}428 \times 88}{100} = 11{,}816.64 \text{ watts.} \quad \text{Ans.}$$

(6) In this example, it is first necessary to determine the input in watts. By formula **4**, the input $I = \frac{100 \times 17{,}500}{87.5} = 20{,}000$ watts. According to Art. **64**, it will be seen that the watts lost in the field coils are equal to the input in watts multiplied by the per cent. loss and divided by 100. Hence, the loss $= \frac{20{,}000 \times 2.6}{100} = 520$ watts. Ans.

(7) In Art. **67**, $C_s = \frac{E_s}{r_s}$. In this example, $E_s = \frac{110}{55} = 2$ amperes. By formula **19**, Part 1, the watts lost in the shunt circuit are equal to the difference of potential between the terminals of that circuit multiplied by the current in amperes flowing through the circuit; or, $W = E \times C$. Substituting, we have $W = 110 \times 2 = 220$ watts. Ans.

(8) See Arts. **14** and **19**.

(9) From Ohm's law, the resistance of the field circuit is equal to the difference of potential between the brushes divided by the current in the field circuit. Let E_s be the difference of potential between the brushes of the dynamo, C_1 be the strength of current when the resistance is all in circuit, and C_2 be the strength of current when the resistance is cut out, or short-circuited. If r_1 represents the resistance of the field circuit, including that of the rheostat, then $r_1 = \frac{E_s}{C_1} = \frac{360}{1.5} = 240$ ohms; and if r_2 represents the resistance

of the field circuit when the resistance of the rheostat has been cut out, or short-circuited, then $r_1 = \frac{E_g}{C_1} = \frac{360}{1.8} =$ 200 ohms. Hence, the amount of resistance which was cut out, or short-circuited, in the rheostat is the difference between these two resistances, or $240 - 200 = 40$ ohms. Ans.

(10) Use formula **4.** In this example, the input $= \frac{100 \times 65{,}000}{90.5} = 71{,}823.2044$ watts. Since one horsepower equals 746 watts, then 71,823.2044 watts equal $\frac{71{,}823.2044}{746} =$ 96.2778 horsepower. Ans.

(11) If the current circulates in the direction indicated by the arrow-heads, *neither* pole-piece will be a north pole; for, by applying the rule given in Art. **29,** Part 1, it will be seen that the north pole of one field coil is opposite the south pole of the other, and the lines of force circulate around the magnets without passing through the armature If the winding of the right-hand coil were reversed, its top would be a north pole, and the top of the left-hand coil being also north, the pole-piece P would become a north consequent pole.

(12) See Arts. **19** and **21.**

(13) In this example, it is first necessary to change the input from horsepower to watts. Since one horsepower is equivalent to 746 watts, then 10 horsepower is equivalent to $10 \times 746 = 7{,}460$ watts. Then, by formula **2,** the efficiency $\mathbf{E} = \frac{6{,}341 \times 100}{7{,}460} = 85$ per cent. Ans.

(14) From b to a through the conductor; for, by applying the thumb-and-finger rule given in Art. **8,** it will be seen that the middle finger points towards a from b.

(15) In this example, it is first necessary to find the input in watts. The output = 11,900 watts and the per

cent. efficiency = 85. Then, by formula **4**, the input = $\frac{100 \times 11{,}900}{85} = 14{,}000$ watts. According to Art. **64**, the watts lost are found by multiplying the input by the per cent. loss and dividing by 100. Hence, $\frac{14{,}000 \times 1.8}{100} = 252$ watts lost in core by eddy currents and hysteresis. Ans.

(16) (*a*) See Art. **28.**

(*b*) See Art. **25.**

(17) According to Art. **70** and formula **20**, Part 1, $W_i = C^2 r_i$. In this example $C = 120$ amperes and $r_i = .040$ ohm; hence, $W_i = 120^2 \times .040 = 576$ watts. Ans.

(18) From example 17, the normal output from the dynamo is 120 amperes at 125 volts, or $120 \times 125 = 15{,}000$ watts. The next step is to determine the input at this output when the efficiency is 75%. By formula **4**, the input in this case is $\frac{100 \times 15{,}000}{75} = 20{,}000$ watts. From example 17, there are 576 watts lost in the armature due to its resistance, and, from Art. **72**, the loss in the armature due to its resistance is $\frac{576 \times 100}{20{,}000} = 2.88\%$. Ans.

(19) (*a*) and (*b*) See Art. **77.**

(20) Under "Field Losses," in Art. **66**, the watts lost in the series coils are found by using formula **20**, Part 1, where $W = C^2 R$. In this example, $C = 40$ amperes and $R = .04$ ohm; hence, $W = 40^2 \times .04 = 40 \times 40 \times .04 = 64$ watts, which represents the loss in the series coils. The watts lost in the shunt coil are given by formula **21**, Part 1, where $W = \frac{E^2}{R}$. In this case, $E = 550$ volts and $R = 550$ ohms; hence, $W = \frac{E^2}{R} = \frac{550 \times 550}{550} = 550$ watts, which is the loss in the shunt field. The total loss in the fields of a compound dynamo is

equal to the sum of the losses in the series and shunt coils. Hence, the total loss in this case is $64 + 550 = 614$ watts. Ans.

(21) P' is the south consequent pole of the field, since, from the rule in Art. **29,** Part 1, in looking through the coils c and d from a position near P', the current is circulating around the field cores in the same direction as the movements of the hands of a watch; while, on the contrary, in looking through the coils a and b from a position near P, the current is circulating around the upper field cores in a direction opposite to the movements of the hands of a watch.

(22) See Art. **29.**

(23) From Art. **64,** the total loss in a dynamo is the sum of the separate losses; hence, in this example, the total loss in watts is $356 + 178 + 263 + 423 + 50 = 1{,}270$ watts. From Art. **59,** the input to the dynamo in this case is $15{,}000 + 1{,}270 = 16{,}270$ watts. By formula **2,** the efficiency $\mathbf{E} = \frac{15{,}000 \times 100}{16{,}270} = 92.1942\%$ at this output. Ans.

(24) (*a*) From example 23, the loss in mechanical friction is 356 watts, and the input is 16,270 watts; hence (see Art. **72**), the per cent. loss is $\frac{356 \times 100}{16{,}270} = 2.1881\%$. Ans.

(*b*) From example 23, the loss in the core by eddy currents and hysteresis is 178 watts, and the input is 16,270 watts; hence (see Art. **72**), the per cent. loss is

$$\frac{178 \times 100}{16{,}270} = 1.094\%. \quad \text{Ans.}$$

(*c*) From example 23, the loss in the field coils is 263 watts, and the input is 16,270 watts; hence, the per cent. loss is $\frac{263 \times 100}{16{,}270} = 1.6165\%$. Ans.

(*d*) From example 23, the loss in the armature $(C^2 r) = 423$ watts, and the input is 16,270 watts; hence, the per cent. loss is $\frac{423 \times 100}{16{,}270} = 2.5999\%$. Ans.

(*c*) From example 23, the sum of the separate losses is 1,270 watts, and this is the difference between the input and the output; the input is 16,270 watts. Hence, by formula **3**, the total per cent. loss $L = \frac{100 \times 1{,}270}{16{,}270} = 7.8058\%$. Ans.

(25) From Art. **22**, it will be seen that the electromotive force generated in an armature is proportional to the speed, other conditions and quantities remaining unchanged. Hence, in this example, if E represents the electromotive force which is generated when the armature is driven at 1,400 revolutions per minute, then, by proportion, $440 : E = 1{,}200 : 1{,}400$, or $E \times 1{,}200 = 440 \times 1{,}400$; therefore, $E = \frac{440 \times 1{,}400}{1{,}200} = 513\frac{1}{3}$ volts. Ans.

(26) See Art. **73** and those following.

(27) In Art. **6**, under "Mutual Induction," it is stated that when the current in the primary circuit tends to increase in strength, the induced current in the secondary coil will tend to circulate around the core which forms the magnetic circuit of both coils, in the opposite direction to that of the current in the primary circuit. In this case, the current in the primary circuit flows from the positive terminal *n* of the battery when the circuit is closed, around the coil to the negative terminal *m*; or, in other words, the current circulates around the core in an opposite direction to the movements of the hands of a watch, as viewed by a person looking through the coil from a position near *C*. Consequently, the momentary current induced in the secondary coil *S* would tend to circulate around the core in the reverse direction, that is, in the same direction as the movements of the hands of a watch. The direction of the current in the secondary circuit would, therefore, be from the terminal *x* through the coil to *y*, and then through the resistance *R* to *x* again.

(28) In Art. **6**, under "Mutual Induction," it is stated that when the strength of the current in the primary circuit

suddenly decreases, the momentary current induced in the secondary coil will circulate around the core which forms the magnetic circuit of both coils in the same direction to that of the current in the primary coil. In this case, when the strength of the current in the primary circuit suddenly decreases, it continues to flow in the same direction as in example 27, that is, from the terminal n through the primary coil P to m, and completing the circuit to n through the battery B. Consequently, the current in the secondary coil S circulates around the core in the same direction, that is, from y through the secondary coil S to x, completing the circuit to y again through the resistance R.

(29) See Arts. **78** and **79.**

(30) Yes; because (Art. **1**) a change takes place in the number of lines which pass through the coil. From the rule given in Art. **7**, it will be seen that the current will circulate around the ring in the same direction as the movements of the hands of a watch; for the effect of the motion is to diminish the number of lines of force which pass through the coil, and the observer is looking along the magnetic field in the direction of the lines of force.

(31) See Art. **42.**

(32) From Art. **11**, it will be seen that the *rate of cutting* lines of force is found by dividing the number cut by the time required to cut them; hence, in this case, the rate of cutting is $\frac{8{,}000{,}000}{.25} = 32{,}000{,}000$ lines of force per second.

(33) Because the solid iron core would act as a large conductor cutting lines of force at an angle, and thereby producing *local*, or *eddy*, currents in the core, heating it badly, and uselessly dissipating a large amount of energy. (Art. **16.**)

(34) By formula **1**, $E = \frac{2\mathcal{N}Sn}{10^8}$. In this example, if 150 complete turns of wire are wound upon the drum core,

there will be 300 outside, or face, wires, and one-half of these will be connected in series, as explained in Art. **21**; then, $S = 150$ outside wires connected in series, $N = 2{,}500{,}000$ lines of force, and $n = \frac{1020}{60}$. Hence,

$$E = \frac{2NSn}{10^8} = \frac{2 \times 2{,}500{,}000 \times 150 \times 1{,}020}{100{,}000{,}000 \times 60} = 127.5 \text{ volts. Ans.}$$

(**35**) From Art. **22**, it will be seen that the electromotive force generated in an armature is proportional to the number of lines of force passing through the core. Let E represent the electromotive force which is generated when 1,250,000 lines of force are passing through the core; then, by proportion, $200 : E = 750{,}000 : 1{,}250{,}000$, or $E \times 750{,}000 = 200 \times 1{,}250{,}000$; therefore, $E = \frac{200 \times 1{,}250{,}000}{750{,}000} =$ $333\frac{1}{3}$ volts. Ans.

(**36**) (*a*) See Art. **65.**
(*b*) See Art. **70.**
(*c*) See Art. **66.**

(**37**) Towards the side *a*; for by applying the thumb-and-finger rule given in Art. **26**, and making the forefinger point in the direction of the lines of force and the middle finger in the direction of the current, the thumb will point towards the side *a*.

(**38**) Use the formula given under "Field Losses" in Art. **67**, $C_s = \frac{E_e}{r_s}$, which is a modification of formula **6**, Part 1. In this example, $E_e = 525$ volts and $r_s = 650$ ohms; hence, $C_s = \frac{E_e}{r_s} = \frac{525}{650} = .8076$ ampere. Ans.

(**39**) The increase in voltage from no load to full load is $124.2 - 115 = 9.2$ volts, which is $\frac{9.2 \times 100}{115} = 8\%$ of the normal voltage. Therefore, the over-compounding is 8%. Ans.

(40) See Art. **20.**

(41) First change the input from horsepower to watts. Since 1 horsepower is equivalent to 746 watts, 44 horsepower is equivalent to $44 \times 746 = 32{,}824$ watts. By formula **2,** the efficiency

$$E = \frac{100 \times 29{,}820}{32{,}824} = 90.8481\%. \quad \text{Ans.}$$

(42) In this example, the input $I = 20{,}000$ watts and the output $O = 17{,}500$ watts. Then, by formula **3,** the per cent. loss $L = \frac{100 \times (20{,}000 - 17{,}500)}{20{,}000} = 12.5\%$. Ans.

(43) In this example, the output is 12,500 watts and the efficiency is 92.5%. Consequently, by formula **4,** the input $I = \frac{100 \times 12{,}500}{92.5} = 13{,}513.5135$ watts. Reducing this input from watts to horsepower gives

$$\frac{13{,}513.5135}{746} = 18.1146 \text{ horsepower.} \quad \text{Ans.}$$

(44) See Art. **73.**

(45) In this example, it is first necessary to change the input from horsepower to watts. Since one horsepower is equivalent to 746 watts, fifty-five horsepower is equivalent to $55 \times 746 = 41{,}030$ watts. The output of the dynamo, by formula **5,** $= \frac{41{,}030 \times 88.5}{100} = 36{,}311.55$ watts. Ans.

(46) In the same manner as shown in Art. **64,** it will be seen that the loss in watts in the field coils is equal to the input multiplied by the per cent. loss and divided by 100. In this example, it is first necessary to change the input from horsepower to watts. Since one horsepower is equivalent to 746 watts, forty-five horsepower is equivalent to $45 \times 746 = 33{,}570$ watts. Consequently, the loss in the field coils is $\frac{33{,}570 \times 2}{100} = 671.4$ watts. Ans.

(47) See Arts. **34, 36,** and **39.**

(48) From Art. **72,** the per cent. loss in the core is found by dividing the watts lost in the core by the input and multiplying by 100. Reducing 64 horsepower to watts gives $64 \times 746 = 47{,}744$ watts. Consequently, the loss in the core is $\frac{800 \times 100}{47{,}744} = 1.6756\%$. Ans.

(49) See Art. **76.**

(50) See Art. **43.**

DYNAMOS AND MOTORS.

(PART 3.)

(1) (*a*) and (*b*) See Art. **40.**

(2) See Art. **54.**

(3) See Art. **94.**

(4) Drum. See Art. **27.**

(5) See Art. **1.**

(6) See Art. **37.**

(7) See Art. **31.**

(8) An open circuit in the armature winding, probably in the lead to the burned commutator segment. See Art. **97.**

(9) (*a*) See Art. **67.**

(*b*) See Art. **56.**

(10) (*a*) and (*b*) See Art. **24.**

(11) See Art. **21.**

(12) See Art. **36.**

(13) (*a*) The length of the arm of the brake being 36 inches, or 3 feet, the torque of the motor is $27 \times 3 = 81$ foot-pounds (Arts. **62** and **63**). The revolutions per minute being 900, the H. P. output of the motor is, from formula **3,**

$$\text{H. P.} = \frac{2 \times 3.1416\, TS}{33{,}000} = \frac{6.2832 \times 81 \times 900}{33{,}000} = 13.88 \text{ H. P.} \quad \text{Ans.}$$

(*b*) To find the efficiency, it is first necessary to find the input and reduce the input and the output to the same units (Art. **63**). In this case, the input is $25 \times 480 =$ 12,000 watts. Reducing 13.88 H. P. to watts, $13.88 \times 746 =$ 10,354 watts. Then, by formula **2**, Part 2, the efficiency

$$E = \frac{100 \times 10{,}354}{12{,}000} = 86.3\%. \quad \textbf{Ans.}$$

(14) See Art. **68.**

(15) (*a*) and (*b*) See Art. **99.**

(16) The connections would be about as shown in Fig. 1, in which *F* is the field circuit, *B*, B_1 the brushes of the motor, *R* the starting resistance, *R. S.* the reversing-switch, *F. B.* the fuse boxes, and *S* the main switch.

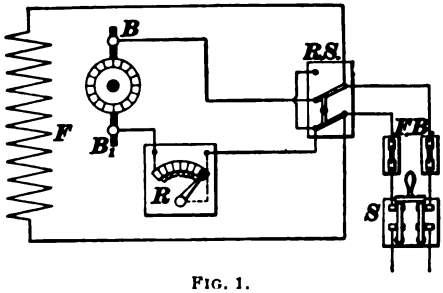

FIG. 1.

(17) By varying the applied E. M. F. or the strength of the field. Art. **57.**

(18) See Art. **39.**

(19) Because the self-induction of the coil having the lesser E. M. F. prevents the flow of current. Art. **14.**

(20) Circuit No. *4* (Fig. 48, Art. **115**) would first be short-circuited by plugging in a cable from terminal -3 to terminal -4. The cable from terminal -3 to terminal $+4$ may now be removed from terminal $+4$ and connected to terminal $+1$, and a cable plugged in from terminal -1 to terminal $-B$. Then, by pulling out the cable from terminal -3 to terminal -4, circuit No. *1* is connected in series with circuit No. *3*, on dynamo *B*, as required. The cable from terminal -4 to terminal $-B$ should be removed to make circuit No. *4* "dead."

(21) (*a*) See Art. **103.**

(*b*) See Arts. **92** and **93.**

(22) (*a*) See Art. **3.**

(*b*) See Art. **5.**

(23) (*a*) 29 amperes flowing out.

(*b*) See Art. **35.**

(24) See Art. **69.**

(25) The input to the motor being $33 \times 230 = 7{,}590$ watts, and the efficiency being 85%, the output, by formula **5,** Part 2, is $\frac{7{,}590 \times 85}{100} = 6{,}451.5$ watts. This is equal to $\frac{6{,}451.5}{746} = 8.65$ H. P. The arm of the brake being 2 feet long and the pressure on the scale platform being 20 lb., the torque of the motor must be 40 foot-pounds $= T$. Knowing the H. P. and the torque, the speed may be found from formula **4,** $S = \frac{33{,}000 \text{ H. P.}}{2 \times 3.1416\ T}$. Substituting the above values for H. P. and T,

$$S = \frac{33{,}000 \times 8.65}{2 \times 3.1416 \times 40} = \frac{285{,}450}{251.328} = 1{,}136 \text{ rev. per min.} \quad \text{Ans.}$$

(26) The frequency is equal to the number of revolutions per second multiplied by the number of pairs of poles (Art. **26**). In this case, $\frac{1080}{60} \times \frac{14}{2} = 126$ cycles per second. Ans.

(27) (*a*) and (*b*) See Art. **118.**

(28) See Art. **58.**

(29) See Art. **78.**

(30) See Art. **101.**

(31) (*a*) See Art. **32.**

(*b*) See Art. **31.**

(32) See Arts. **29** and **30.**

(33) See Art. **85.**

(34) See Arts. **114** and **132.**

(35) See Art. **17** and Fig. 6.

(36) See Art. **50.**

(37) See Art. **124.**

(38) See Art. **80.**

(39) See Art. **12.**

(40) See Art. **127.**

(41) See Art. **90.**

(42) See Art. **55.**

(43) See Art. **106.**

(44) See Art. **109.**

(45) See Art. **65.**

(46) See Art. **128.**

(47) See Art. **23.**

(48) See Art. **41.**

(49) See Art. **131.**

(50) When in the position of least action, a coil is momentarily disconnected from the external circuit, then is thrown in parallel with the coil ahead of it, then in series with the other two coils which are then in parallel, then in parallel with the coil behind it, and then disconnected from the circuit again. See Art **20,** also Fig. 7.

(51) (*a*) See Art. **68.**

(*b*) See Arts. **80** and **84.**

(52) (*a*) Of the 5 amperes input, by Ohm's law, $\frac{125}{62.5} =$ 2 amperes go to the field, the loss being, therefore, $2 \times 125 = 250$ watts. The rest, or $3 \times 125 = 375$ watts, make up the friction and core losses of the machine (Art. **65**).

When taking an input of 77 amperes at 125 volts, or 9,625 watts, there would still be required 250 watts for the field and 375 watts for the core losses and friction. Of the 77 amperes, 75 flow through the armature, and as this has a resistance of .04 ohm, the armature $C^2 r$ would be $75^2 \times .04 = 225$ watts. The total losses would then be $250 + 375 + 225 = 850$ watts, and the output would, therefore, be $9,625 - 850 = 8,775$ watts, or $\frac{8775}{746} = 11.76$ H. P. Ans.

(*b*) The output being 8,775 watts and the input 9,625, the efficiency is, by formula **2**, Part 2, $\frac{100 \times 8,775}{9,625} = 91.17$ per cent. Ans.

(53) See Art. **104.**

(54) (*a*) and (*b*) See Art. **26.**

(55) See Art. **10.**

(56) See Art. **54.**

(57) (*a*) and (*b*) See Art. **121** and Figs. 51 and 52.

(58) From Art. **79**, the speed of the field would be $\frac{72}{5} = 14.4$ revolutions per second, or $14.4 \times 60 = 864$ revolutions per minute. With 2.5% slip, the speed of the armature would be $864 - (864 \times .025) = 842.4$ revolutions per minute. Ans.

(59) See Art. **92.**

(60) (*a*) See Art. **52.**

(*b*) and (*c*) See Art. **53.**

(61) When the whole of the coil is directly under one pole-piece. See Art. **111.**

(62) See Art. **73.**

(63) See Art. **26.**

(64) See Art. **130.**

(65) See Art. **59.**

(66) See Art. **94.**

(67) (*a*) and (*b*) See Art. **56.**
(*c*) See Arts. **55** and **56.**

(68) See Arts. **21** and **22.**

(69) See Art. **96.**

(70) See Art. **79.**

(71) See Art. **52.**

(72) See Art. **41.**

(73) See Art. **79.**

(74) There is no definite answer for this problem, as a great number of different arrangements is possible. See Art. **129.** By comparing it with Fig. 54, Art. **127,** it will be seen, if the connections are correctly made and all the necessary instruments in place, the exact arrangement is a matter of taste and judgment.

(75) See Art. **63.**

(76) See Art. **27.**

(77) The frequency being 132 and there being 11 pairs of poles, the motor will run at $\frac{132}{11} = 12$ revolutions per second, or $60 \times 12 = 720$ revolutions per minute. See Art. **68.**

(78) (*a*) and (*b*) See Art. **80.**

(79) See Art. **6.**

(80) See Art. **57.**

(81) See Art. **97.**

(82) See Art. **6.**

(83) The effective voltage of the alternating current is obtained by using formula **2,** Art. **47,**

$$E = .612 \times 200 = 122.4 \text{ volts.} \quad \text{Ans.}$$

(84) (*a*) The strength of the direct current would be the same as the *effective* strength of the alternating current,

which is .707 of its maximum strength. See Art. **36.** Then, $.707 \times 12 = 8.48$ amperes. Ans.

(*b*) See Art. **36.**

(85) The counter E. M. F. E' depends on the field strength and on the speed of rotation of the armature. Hence, if the field is weakened, E' will decrease and allow a larger current to flow through the armature. This will result in an increase in speed, till at the new speed and with the weakened field, the counter E. M. F. is raised sufficiently to cut down the current to its proper value, or so that the torque will again balance the resistance to rotation. See Art. **57.**

(86) See Art. **83.**

(87) See Art. **71.**

(88) See Art. **81.**

(89) See Art. **83.**

(90) See Art. **46.** The E. M. F. of each phase will be given by formula **1,**

$$\bar{E} = .707 \times 220 = 155.5 \text{ volts.} \quad \text{Ans.}$$

(91) See Art. **48.**

(92) See Art. **34.**

ELECTRIC HOISTING AND HAULAGE.

(1) See Art. **3.**

(2) See Art. **4.**

(3) See Art. **5.**

(4) See Art. **8.**

(5) See Art. **16.**

(6) See Arts. **20** and **24.**

(7) See Arts. **21** and **22.**

(8) See Art. **26.**

(9) See Art. **27.**

(10) See Art. **28.**

(11) See Art. **40.**

(12) See Arts. **41** and **45.**

(13) See Art. **42.**

(14) See Art. **44.**

(15) See Art. **50.**

(16) See Art. **51.**

(17) See Art. **54.**

(18) See Art. **1.**

(19) See Art. **5.**

(20) See Art. **5.**

ELECTRIC PUMPING, SIGNALING, AND LIGHTING.

(1) See Fig. 19, Art. **32.**

(2) See Fig. 20, Art. **34.**

(3) (*a*) See Art. **23.**

(*b*) By connecting the two terminals of the electromagnet directly to the binding-posts of the bell. See Art. **24.**

(4) The Edison-Lalande or Gordon type. See Art. **36.**

(5) See Fig. 21, Art. **35.**

(6) (*a*) About $3\frac{1}{2}$ to 4 watts.

(*b*) About 200.

(*c*) $\frac{1}{2}$ ampere. See Arts. **47** and **48.**

(7) (*a*) The lamps would be connected two in series, as shown in Fig. 29, Art. **52.**

(*b*) For the 550-volt circuit, 5 lamps would have to be connected in series; hence, the sketch required is similar to that shown in Fig. 29 except that there will be 5 lamps in series instead of 2.

(8) (*a*) A short circuit is a path of low resistance established between two points of a system. It usually refers to a connection of low resistance between the two sides of a constant-potential system, such as might be caused, for example, by the wires becoming crossed or accidentally connected together in some way.

(*b*) Because the pressure is capable of setting up a very large current that may be sufficient to burn the wire and set fire to surrounding material. See Art. **62.**

(9) (*a*) See Arts. **49** and **50.**

(*b*) Carbons last about 10 hours in open-arc lamps and about 150 hours in the enclosed-arc lamps. See Art. **50.**

(10) See Arts. **4** and **5.**

(11) A motor-driven pump runs at a nearly constant speed, regardless of the load; hence, with the electric pump, there is not as much danger from hammering as with steam or compressed-air pumps. See Art. **6.**

(12) See Art. **9.**

(13) (*a*) 450 watts.

(*b*) 300 watts. See Art. **49.**

(14) (*a*) From 65 to 70 per cent.

(*b*) From 70 to 75 per cent. See Art. **9.**

(15) See Art. **7.**

(16) (*a*) The drop is the falling off in pressure from the dynamo to the point where the current is utilized. It is equal to the E. M. F. necessary to force the current through the line, or, in other words, to overcome the line resistance.

(*b*) The drop depends on the amount of current to be forced through the line and the resistance of the line. It is equal in amount to the product of the current and the resistance. See Art. **59.**

(17) (*a*) The bells do not all vibrate in unison, and the result is that the circuit is broken in one part when it is closed at another; hence, the bells either do not ring at all or else they ring with a very weak sound.

(*b*) Make all the bells single-stroke but one, and allow this one bell to do the interrupting of the current. See Art. **21.**

(18) See Art. **22.**

(19) The current C will be 75 amperes, because each lamp will take $\frac{1}{2}$ ampere. The total length of line will be 3,000 feet, because the distance to the lamps is 1,500 feet. We may then obtain the size of wire by substituting in formula **2,**

$$A = \frac{10.8 \times 3{,}000 \times 75 \times 100}{110 \times 10} = 220{,}909. \quad \text{Ans.}$$

This is a little larger than a No. 0000 wire, as will be seen by referring to Table 2, but a No. 0000 would probably be used.

(20) .125 inch = 125 mils, hence circular mils = 125^2 = 15,625. Ans. See Art. **55.**

(21) See Fig. 13, Art. **26.**

(22) See Fig. 14, Art. **27.**

(23) (*a*) See Art. **53.**

(*b*) Because it permits the use of high line pressures, thus keeping down the line current for a given amount of power transmitted and reducing the amount of copper required in the line.

(24) (*a*) See Arts. **62** and **63.**

(*b*) If no fuse were provided, the heavy flow of current might be sufficient to burn the insulation off the wire or even fuse the wire itself.

(25) Since the primary pressure is 2,000 volts, each ampere in the primary will be equivalent to 40 lights on the secondary. See Art. **53.** The line current required for 1,200 lamps will be $\frac{1200}{40} = 30$ amperes. The total length

of line is 4 miles, or 21,120 feet. Applying formula **2,** we find the area of cross-section to be

$$A = \frac{10.8 \times 21,120 \times 30 \times 100}{2,000 \times 10} = 34,214. \quad \text{Ans.}$$

A No. 5 B. & S. wire would likely be used.

(26) See Fig. 40, Art. **71.**

(27) See Art. **6.**

(28) See Fig. 33, Art. **61.**

(29) Each set of five lamps will take ½ ampere; hence, the 200 lamps will take 20 amperes. See Art. **52.**

ELECTRIC COAL-CUTTING MACHINERY.

(1) See Arts. **1** and **2.**

(2) See Art. **1.**

(3) See Arts. **11** and **27.**

(4) See Art. **16.**

(5) See Art. **18.**

(6) See Art. **18.**

(7) See Arts. **21** and **22.**

(8) See Art. **23.**

(9) See Art. **25.**

(10) See Art. **26.**

(11) See Art. **31.**

(12) See Art. **28.**

(13) See Art. **5.**

(14) See Arts. **5** to **8.**

(15) See Art. **13.**

(16) See Arts. **16** and **17.**

(17) See Art. **22.**

(18) See Art. **26.**

INDEX.

NOTE.—All items in this index refer first to the section (see Preface, Vol. I) and then to the page of the section. Thus, "Alternators 29 14" means that alternators will be found on page 14 of section 29.

A.	Sec.	Page.
Accuracy against speed	26	99
Advantage of heavy rails	31	31
Advantages of diamond drill, Special	26	109
" " drilling pit	26	88
" " electric locomotives	31	25
" " electric pumping	32	3
Alternating current	29	15
" " dynamo	30	26
" " dynamos	29	55
" " motors, Output of	30	90
" current switchboards	30	141
" currents, Properties of	30	43
Alternation, Definition of	30	26
Alternator armatures	30	27
Alternators	29	14
" Field excitation of	30	33
" Multiphase	30	37
" Single-phase	30	37
" Three-phase	30	40
" Two-phase	30	37
American system of boring	26	33
Ammeters	28	29
" Connections for	28	48
Ampere, Definition of	28	25
" Explanation of	28	26
" meters	28	29
" turns	29	44
Annealing	26	13
Annunciator, Use of	32	25
Appliances used in diamond drilling	26	56
Applications of Ohm's law	28	49
Arc lamps, Enclosed	32	42
Arc lamps on constant-potential circuits	32	53
" " Open	32	41
" light switchboards	30	124
Armature, Definition of	29	33
" reactions	29	34
Armatures, Driving mechanism for	29	66
" for alternators	30	27
Artificial magnets	28	13
Auger hand-drilling machines	26	47
" mining-machine	27	28
" power drills	26	52
" stem	26	34
Axis of magnetism	28	14

B.	Sec.	Page.
Ball arc dynamo	30	9
" bearing	26	66
Band-wheel	26	38
Bearing, Ball	26	66
" Conical roller	26	66
Beekman friction clutch	31	19
Bells, Methods of connecting	32	19
" Signaling with	32	18
" Single-stroke	32	21
Bipolar field magnets, Types of	29	54
Bit, Diamond	26	56
" Reaming	26	93
Bits, Kinds of	26	5
" used in deep boring	26	36
Bore holes, Principal uses of	26	1
Boring appliances	26	33
" Methods of	26	2
Borts	26	57
Branch block	32	56
Bridge, Wheatstone	28	40
Broken circuits	28	12
" field coils, Testing for	30	101

	Sec.	Page.
Brush arc dynamo	30	11
Brushes and brush holders	29	64
Building up of dynamo	29	46
Bull-wheel	26	40
Bus-bars	30	134

C.	Sec.	Page.
Cables, Carrying capacity of	32	49
Calculation of electromotive force	29	30
Calculations for wiring	32	50
Carbons	26	57
Care of alternating-current motors	30	120
" " alternators	30	119
" " direct-current dynamos	30	113
Carrying capacity of cables	32	49
" " " fuse wires	32	56
" " " wires	31	14
Casing	26	89
Causes of drift in diamond-drill holes	26	79
Cells, Electromotive force of	28	53
" Galvanic	28	8
" in multiple	28	11
" " multiple series	28	11
" " series	28	11
" Voltaic	28	8
Center-packed pump	32	9
Centrifugal pump	32	4
Chain coal-cutting machines	33	5
" coal-cutting machines, Conditions favorable and unfavorable to	33	19
" coal-cutting machines, Methods of operating and handling	33	11
" coal-cutting machines, Trucks for	33	14
Chain-cutter machine	27	19
Chain-cutter machines, Calculations relating to	27	27
Chain-cutter machines, Favorable and unfavorable conditions for	27	25
Chain-cutter machines, Methods of operating and shifting	27	24
Chain-cutter machines, Types of	27	22
Chain-cutter machines, Working capacity of	27	26
Chain-cutter shearing machines	27	26
Chain cutters, Working capacity of	33	21
Chain shearing machines	33	15
Changes in speed of machine	26	90
Characteristics of cutting tools	26	2
Charges, Positive and negative	28	4
" Static	28	3
Choking coil for lightning arrester	30	129
Churn drills	26	2
Circuit, Definition of	28	12
" External	28	12
" Internal	28	12
Circuits, Broken	28	12
" Closed	28	12
" Grounded	28	12
Circular mil, Definition of	32	46
Classes and use of hammers	26	12
" of auger hand-drilling machines	26	47
Closed circuits	28	12
" coil drum winding	29	28
" " winding	29	27
Coal cutting, General remarks on	33	33
" " machines, Chain type	33	5
" " machines, Compressed-air	27	1
Colors, Flow of	26	16
Columns, Drilling	26	19
Commutator	29	16
" Mechanical construction of	29	63
Comparison of systems of pumping	32	2
Compass	28	14
Compound-wound dynamo	29	50
Compressed-air coal-cutting machines	27	1
" power	27	2
" power, Advantages of	27	4
Conditions favorable and unfavorable to chain coal-cutting machines	33	19
Conditions favorable and unfavorable to pick machines	33	31
Conductivity, Definition of	28	54
Conductors and non-conductors	28	5
" in parallel	28	13
" " parallel, Resistance of	28	55
" " series	28	12
" Materials for	32	46
Conical roller bearing	26	66

	Sec.	Page.
Connection, Equalizing	30	137
Connections for series motor	30	61
" " shunt motor	30	61
Consequent poles	29	54
Constant-current dynamo	29	55
" dynamo, Output of	30	25
" dynamos	30	1
" motors	30	71
Constant-potential dynamo	29	54
Constant-potential dynamos, Efficiency of	29	68
Constant-potential motors	30	55
Construction of constant-potential motors	30	70
" of cutter chain	33	10
" " mine locomotives	31	26
Continuous current	28	8
Continuous-current dynamo	29	26
Control of lights from two or more points	32	60
Copper wire, Properties of	32	48
Core	26	57
" barrel	26	59
" barrels, Non-rotating	26	108
" " Special	26	107
" Definition of	30	55
" Laminated	29	21
" lifter ring	26	57
" lifters, Special	26	108
" losses in dynamo	29	73
Cost per foot in diamond drilling	26	102
Coulomb, Definition of	28	60
Counter E. M. F	30	56
" torque	29	38
Cross-section of wires, Estimation of	32	46
Current, Alternating	29	15
" Consumption of incandescent lamps	32	41
" Continuous	28	8
" Pulsating	29	17
" strength	28	10
Cut-outs	32	54
Cutter-bar machines	33	26
" "	27	27
Cutter chain, Construction of	33	10
Cutters, Intermittent	26	2
Cutting tools, Characteristics of	26	2
" " Definition of	26	2
Cycle, Definition of	30	27

D.

	Sec.	Page.
Danger of injury from shock	31	15
Davis calyx drill	26	110
Deep boring, Bits used in	26	36
" " Methods and appliances of	26	30
" percussive-boring appliances	26	33
Derrick, Steel	26	38
" Wooden	26	38
Description of pick machines	33	27
Diamond bit	26	56
" drill holes, Drift in	26	77
" " " " "	26	82
" " " Surveying	26	83
" drilling, Appliances used in	26	56
" drilling, Cost per foot in	26	102
" drilling in soft or soluble materials	26	106
" drilling, Line of tools used for	26	59
" drilling, Machines used in	26	66
" drilling, Machines used in	26	74
" drilling, Practical notes on	26	86
Diamonds in the bit, Methods of setting	26	97
" Lost	26	97
Difference of potential	28	6
Differential feed	26	60
Dimensions and features of percussive rock-drills	26	22
Dimensions and weights of parts of string of tools	26	38
Direct-current dynamos, Care of	30	113
" hoist with jaw clutch	31	21
Disadvantages of drilling pit	26	88
Dissipation of energy	23	9
Distortion of field	29	39
Dolly	26	8
Double-cylinder hydraulic feed	26	65
Drainage of mines	32	1
Drift in diamond drill holes	26	77
" " " " "	26	82
" in diamond drill holes, Causes of	26	79
Drill, Davis calyx	26	110

	Sec.	Page.
Drill, Electric percussive	26	23
Drilling, Guides for the	26	90
" columns	26	19
" from the surface	26	86
" from underground with the diamond drill	26	101
" pit	26	88
" Rate of	26	102
Drills and hammers, Weights of	26	8
" Auger power	26	52
" Churn	26	2
" Compressed-air	26	17
" Hand	26	2
" Power	26	2
" Power percussive	26	17
" Steam	26	17
" Tempering	26	13
Drive head	26	41
Driving mechanism for armatures	29	66
Drop in potential	28	51
Drum core, Definition of	29	22
" winding, Closed-coil	29	28
Dynamo, Ball arc	30	9
" Brush arc	30	11
" Building up of	29	46
" Constant-current	29	55
" " potential	29	54
" Definition of	29	33
" Excelsior arc	30	8
" Mechanical construction of	29	59
" Multipolar	29	55
" Physical theory of	29	9
" Picking up of	29	46
" Series	29	48
" Standard arc	30	7
" Thomson-Houston arc	30	20
" Western-Electric arc	30	8
" Westinghouse arc	30	16
" Wood arc	30	4
Dynamos, Alternating-current	29	55
" "	30	26
" and motors, Installation of	30	91
" Compound-wound	29	50
" Constant-current	30	1
" Core losses in	29	73
" Eddy-current losses in	29	79
" Field losses in	29	74
" Friction losses in	29	72
Dynamos, Journals and bearings for	29	65
" Safe temperature rise of	29	81
" Separately excited	29	43
" Sparking of	29	82
" Testing and locating faults in	30	97
" Types of	29	54

E.	Sec.	Page.
Eddy-current losses in dynamos	29	79
" currents	29	21
Effect of grade upon capacity of locomotives	31	30
" " velocity and weight in boring	26	10
Efficiency of constant-potential dynamos	29	68
" " dynamos, Calculation of	29	80
Electric coal-cutting machinery, General considerations	33	1
" haulage, General considerations	31	25
" hoisting, General considerations	31	15
" " Practical examples of	31	16
" locomotive, Advantages of	31	25
" locomotives, Effect of grade upon capacity	31	30
" locomotives, Examples of	31	32
" locomotives, Size and capacity of	31	27
" locomotives, Speed of	31	27
" locomotives vs. the mule	31	27
" motors	30	54
" percussive drill	26	23
" portable pump	32	16
" pumping, Advantages of	32	3
" pumps, Gearing for	32	5
" " General construction and form of packing employed in	32	4
" pumps, Steam consumption of	32	2
" railroads, Switchboards for	30	142

	Sec.	Page.
Electric series	28	4
" transmission at mines	31	3
" transmission, Choice of system	31	4
" transmission, Practical examples of	31	5
" vs. rope haulage	31	27
Electrical action, Processes for developing	28	2
" coal drill, Jeffrey rotary	26	53
" power	28	62
" " Estimation of	28	63
" quantity	28	59
" " Estimation of	28	60
" units	28	25
" work	28	60
" " Estimation of	28	62
Electricity and compressed air, Relative advantages of	31	2
" Properties of	28	1
Electrodes, Definition of	28	9
Electrodynamics	28	6
" Definition of	28	2
Electrolytes, Definition of	28	9
Electromagnet	28	23
" Horseshoe	28	24
" Iron-clad	28	25
Electromagnetic induction	29	1
Electromagnetism	28	18
Electromotive force	28	25
" " Calculation of	29	30
" " of cells	28	53
" series	28	9
Electrostatics, Definition of	28	2
Enclosed arc lamps	32	42
" sinking pump	32	13
Energy, Dissipation of	26	9
Equalizing connection	30	137
Estimation of cross-section of wire	32	46
" " electrical power	28	63
" " resistance	28	32
Examples of electric locomotives	31	32
Excelsior dynamo	30	8
External circuit	28	12

F.	Sec.	Page.
Field, Distortion of	29	39
" excitation of alternators	30	33
" losses in dynamos	29	74
" Magnetic	28	15
Field Magnets	29	43
" winding of induction motor	30	82
Fishing or grappling tools	26	41
" taps	26	93
Flash-light signals for shaft	32	30
Platter	26	8
Flow of colors	26	16
Forms of steel bits for rotary boring	26	46
Foucault current losses in dynamos	29	79
Four-haulage-road signal system	32	27
Frequency, Definition of	30	27
Friction clutch, Beekman	31	19
" losses in dynamos	29	72
" plates	26	65
" Side	26	91
Frogs for trolley system	31	12
Fuse blocks	32	54
" wires, Carrying capacity of	32	56

G.	Sec.	Page.
Galvanic cells	28	8
Galvanometer, Description of	28	27
Gearing for electric pumps	32	5
General Electric hoist	31	17
" remarks on coal-cutting	33	33
Grounded circuits	28	12
Grounds on dynamos, Testing for	30	108
Guides for the driller	26	90

H.	Sec.	Page.
Hammers, Classes and use of	26	12
Hand-drills	26	2
Hand-power drill, Jackson	26	25
" " Jones	26	28
" rock-drill	26	25
Hangers for trolley-wires	31	11
" Methods of attaching, to roof	31	12
Haulage block signal	32	35
" roads, Signal for	32	24
Header, Stanley	27	29
Heating of dynamos	29	81
Heavy rails, Advantage of	31	31
Hoist, General Electric	31	17
" Lambert	31	23
" operated by induction motor	31	23
Hoisting plug	26	60
Horseshoe magnet	28	14

	Sec.	Page.
Hydraulic feed	26	63
" " Double-cylinder	26	65
" " Single-cylinder	26	65
Hysteresis	29	73

I.	Sec.	Page.
Incandescent lamps	32	40
" " Voltage of	32	40
" lighting by direct current	32	43
" lighting with alternating current	32	45
Independent drum hoist with induction motor	31	23
Indicators, Thrust	26	62
Induction, Electromagnetic	29	1
" Magnetic	28	18
" motors, Action of	30	83
" " Field winding of	30	82
" " Polyphase	30	81
" " Single-phase	30	78
" Mutual	29	5
Injury from shock, Danger of	31	15
Installation of dynamos and motors	30	91
Insulation of transmission lines	31	8
Interior and underground wiring	31	10
Intermittent cutters	26	2
Internal circuit	28	12
International ohm	28	31

J.	Sec.	Page.
Jack-knife switch	30	132
Jackson hand-power percussive drill	26	25
Jars	26	34
Joints in wires	32	49
Jones hand-power drill	26	28
Joule, Definition of	28	61
Journals and bearings for dynamos	29	65
Jumper	26	2

K.	Sec.	Page.
Kinds of bits	26	5
Knife-blade switch	30	133

L.	Sec.	Page.
Lambert hoist	31	23
Laminated core	29	21
Lifting swivel	26	60
Lighting systems	32	43
Lightning arrester, Choking coil for	30	129
" " Thomson	30	128
" arresters	31	9
Line construction for mines	31	7
Line of tools for diamond drilling	26	59
Lines of force	28	15
" " " Direction of	28	17
Lodestone	28	13
Long-distance transmission at mines	31	2
Longwall mining machine	27	28
" " machines	33	91
Lost diamonds	26	97
" rods, Recovering	26	93
" " "	26	96
" water	26	91

M.	Sec.	Page.
Machines, Auger hand-drilling	26	47
" Posts and grips for	26	48
" used in diamond drilling	26	66
Magnet, Horseshoe	28	14
Magnetic and non-magnetic substances	28	15
" density	28	18
" field	28	15
" induction	28	18
" permeability	28	22
" poles	28	14
Magnetism, Axis of	28	14
" Density of	28	18
" Quantity of	28	18
" Residual	29	47
Magnetizing force	29	48
Magneto-machine	29	42
Magnets	28	13
" Artificial	28	13
" Permanent	28	14
Materials for conductors	32	46
Mechanical construction of dynamo	29	59
Megohm, Definition of	28	34
Method of operating pick machines	33	28
Methods and appliances for deep boring	26	30
Methods of boring	26	2
" " connecting bells	32	19
" " diamond drilling in soft or soluble material	26	106
" " recovering lost bit	26	95

	Sec.	Page.
Methods of setting diamonds in the bit	26	97
" requiring special tools or fixtures	26	107
Microhm, Definition of	28	34
Mil, Definition of	32	46
Miller's spudding attachments	26	43
Mine locomotives, Construction of	31	26
Mines, Drainage of	32	1
" Electric transmission at	31	3
" Long-distance transmission at	31	2
" Power transmission at	31	1
Mining-machine, Longwall	27	28
" Auger	27	28
Mining-machines, Transmission of electrical energy to	33	2
Motor connections with reversing switch	30	63
Motors, Constant-current	30	71
" " potential	30	55
" Construction of	30	70
" Electric	30	54
" Methods of regulating	30	59
" Output of	30	65
Multiphase alternators	30	57
Multiple-series grouping for cells	28	11
" system of incandescent lighting	32	44
Multipolar dynamo	29	55
" field magnets, Types of	29	59
Mutual induction	29	5

N.	Sec.	Page.
Neutral point, Shifting of	29	39
" points	29	29
" spaces	29	29
Non-rotating core-barrels	26	108
Notes on diamond drill, Practical	26	86

O.	Sec.	Page.
Ohm, Definition of	28	25
" Explanation of	28	30
" International	28	31
" Standard	28	38
Ohm's law	28	26
" " Applications of	28	49
Open-arc lamps	32	41
Operating and handling chain coal-cutting machines	33	11
Operation of reciprocating bell	32	20
Output of constant-current dynamo	30	25
" " motors	30	65
Over-compounded dynamo	29	51
" compounding	29	51

P.	Sec.	Page.
Parallel grouping for cells	28	11
" wound armatures	29	57
Partially enclosed sinking pump	32	12
Parting of rods	26	92
Percussive boring, Definition of	26	2
" boring machines, Portable	26	42
" rock-drill, Dimensions and features of	26	22
" rock-drill, Requirements of	26	21
Permanent magnets	28	14
Permeability, Magnetic	28	22
Phase, Definition of	30	37
" splitting	30	89
Physical theory of dynamo	29	9
Pick machines	27	5
" "	33	27
" " Calculations relating to	27	16
" " Conditions favorable and unfavorable to	33	31
" " Description of	33	27
" " Favorable and unfavorable conditions for	27	13
" " Method of operating	33	28
" " Method of operating	27	9
" " Shearing with	27	11
" " Working capacity of	33	32
" " Working capacities of	27	15
" shearing machine	27	18
Picking up of dynamo	29	46
Pipe, Stand	26	58
Pit, Drilling	26	88
Pitman	26	42
Plates, Friction	26	65
Plug, Hoisting	26	60
Points to be observed in tempering	26	14
Poles, Consequent	29	54

	Sec.	Page.
Poles, Magnetic	28	14
" Salient	29	54
Polyphase induction motors	30	81
" synchronous motors	30	76
Portable percussive-boring machines	26	42
" pump	32	16
Positive and negative charges	28	4
Post and grips for hand drilling machines	26	48
Potential, Drop in	28	51
Pound-feet, Definition of	30	55
Power drills	26	2
" Electrical	28	62
" percussive drills, General construction of	26	17
" transmission at mines	31	1
Practical examples of electric hoisting	31	16
" notes on diamond drilling	26	86
Preparation work for surface drilling	26	86
Pressure registers	26	62
Primary and secondary coils	29	6
Principal uses of bore holes	26	1
Processes for developing electrical action	28	2
Properties of alternating currents	30	43
" " copper wire	32	48
" " electricity	28	1
Protection against short circuits	32	53
Pulsating current	29	17
Pump, Selection of	32	17
" Single reduction geared	32	12
Push-button, Ordinary style	32	22
" Waterproof	32	38

Q.	Sec.	Page.
Quantity, Electrical	28	59

R.	Sec.	Page.
Ratchet	26	54
Rate of drilling	26	102
Reamer	26	42
Reaming bit	26	93
Reciprocating bell, Operation of	32	20
Record furnished by diamond drill, Value of	26	75
Records	26	99
Recovering lost rods	26	93
" " "	26	96
Reflecting galvanometer	28	28
Registers, Pressure	26	62
Regulation of motors	30	59
" " series dynamo	29	49
Remedies for sparking	30	105
Repairs to dynamos	30	116
Requirements of a good percussive rock-drill	26	21
Residual magnetism	29	47
Resistance box	28	38
" Estimation of	28	32
" of conductors in parallel	28	55
" Specific	28	36
Return circuit for trolley system	31	13
Reversing switch for motors	30	62
Rheostat	28	38
Ring core, Definition of	29	22
" Core-lifter	26	57
Rock-drill, Hand-power	26	25
Rods, Parting of	26	92
Rope-socket	26	84
Rotary boring, Definition of	26	45
" " Forms of steel bits for	26	46
" transformers	30	50

S.	Sec.	Page.
Salient poles	29	54
Samples from soft material, Special devices for obtaining	26	109
Sand line	26	43
" pump	26	40
Scraper	26	12
Seed bags	26	41
Selection of pump	32	17
Self-induction	29	4
Separately excited dynamos	29	43
Series arc-light system	32	61
" dynamo, Regulation of	29	49
" dynamos	29	48
" Electric	28	4
" Electromotive	28	9
" grouping for cells	28	11
" motor, Connections for	30	61
Setting diamonds in the bit, Methods of	26	97
Shaft, Suspension of cables in	31	10
" Signals in	32	29
Shearing machine, Pick	27	18
" machines, Chain-cutter	27	26
Short circuits, Protection against	32	53
Shunt dynamo	29	45

	Sec.	Page.
Shunt motor, Connections for.	30	61
Side friction	26	91
Signal system with telephones	32	31
" with ground connection	32	23
" without ground connection	32	23
Signaling by flash-lights	32	30
" with bells	32	18
Signals for haulage roads	32	24
" in shaft	32	29
Simple alternator	29	14
Single-cylinder hydraulic feed	26	65
Single-phase alternator	30	37
" induction motors	30	78
" synchronous motors	30	72
Single-reduction geared pump	32	12
Single-stroke bells	32	21
Sinker-bar	26	34
Sinking pump, Enclosed	32	13
" " Partially enclosed	32	12
Size and capacity of electric locomotives	31	27
Slip, Definition of	30	85
Snap switches	32	58
Solenoid, Definition of	28	21
" Polarity of	28	22
Sow	26	8
Sparking of dynamos	29	82
" Remedies for	30	105
Special advantages of diamond drill	26	109
" core-barrels	26	107
" core-lifters	26	108
" devices for obtaining samples from soft material	26	109
" shaft signal system	32	37
Specific resistance	28	36
Speed, Accuracy against	26	99
" of electric locomotives.	31	27
" " machine, Changes in	26	90
Splitting of phase	30	89
Spreader	26	8
Spring-pole system of boring.	26	30
Spudding, Definition of	26	45
Stand-pipe	26	58
Standard arc dynamo	30	7
" ohm	28	38
Stanley header	27	29
Starting resistance, Use of	30	57
Static charges	28	3
Steam consumption of electric pumps	32	2
Steam consumption of steam-pumps	32	2
" pumps, Steam consumption of	32	2
Steel derrick	26	38
Strength of current	28	10
String of tools	26	33
Substances, Magnetic and non-magnetic	28	15
Surface drilling, Preparation work for	26	86
Surveying diamond-drill holes	26	83
Suspension of cables in shaft	31	10
Swage	26	8
Switch, Knife-blade	30	133
Switchboard for incandescent lighting	30	136
Switchboards for alternating currents	30	141
" for arc-light circuits	30	124
" for electric railroads	30	142
" for incandescent circuits	30	130
Swivel, Lifting	26	60
Synchronous motors, Polyphase	30	76
" " Single-phase	30	72
Systems of lighting	32	43
" " pumping, Comparison of	32	2

T.

	Sec.	Page.
Taps, Fishing	26	93
Temper screw	26	34
Tempering	26	13
" Points to be observed in	26	14
Tension, Definition of	28	6
Testing and locating faults in dynamos	30	97
" for broken field coils	30	101
" " grounds on dynamos	30	108
The influence of the angle of the hole	26	101
Thomson-Houston arc dynamo	30	20
" lightning arrester	30	128
Three-phase alternators	30	40
Thrust indicators	26	62
Thumb-and-finger rule for dynamos	29	8
" " rule for motors	29	36

	Sec.	Page.
Tools for dressing bits	26	8
" Strings of	26	33
Torque, Counter	29	38
Track used as return circuit	31	13
Transformers	30	47
" Rotary	30	50
Transmission lines, Insulation of	31	7
Transmission of electrical energy to mining-machines	33	2
Triplex outside-packed pump	32	7
" pump without tail-rod supports	32	9
Trolley-wires, Hangers for	31	11
Trucks for chain coal-cutting machines	33	14
Two-phase alternators	30	37
Types of bipolar field magnets	29	54
" " dynamos	29	54

U.	Sec.	Page.
Units, Electrical	28	25

V.	Sec.	Page.
Value of record furnished by core	26	75
Value of record furnished by diamond drill	26	75
Velocity and weight in boring, Effect of	26	10
Volt, Definition of	28	25
Volt, Explanation of	28	44
Voltage of incandescent lamps	32	40
Voltaic battery, Definition of	28	9
" cells	28	8
" elements, Definition of	28	9
Voltmeter, Cardew	28	46
" Connections for	28	49
" Weston	28	46
Voltmeters	28	46

W.	Sec.	Page.
Walking-beam	26	42
Wall regulator for Thomson-Houston arc dynamo	30	24
Washings	26	91
Water, Lost	26	91
Waterproof push-button	32	38
Water rheostat	30	104
Watt, Definition of	28	62
Weights of drills and hammers	26	8
Western Electric arc dynamo	30	8
Westinghouse arc dynamo	30	16
Weston voltmeter	28	46
Wheatstone bridge	28	40
Winding, Closed-coil	29	27
Wires, Carrying capacity of	31	14
" Making joints in	32	49
Wiring calculations	32	50
Wood arc dynamo	30	4
Working capacity of chain cutters	33	21
" " " pick machines	33	32